Final FEED Study Report

Retrofittable Advanced Combined Cycle Integration for Flexible Decarbonized Generation

Site: Alabama Power/Southern Co Plant Barry Unit 6

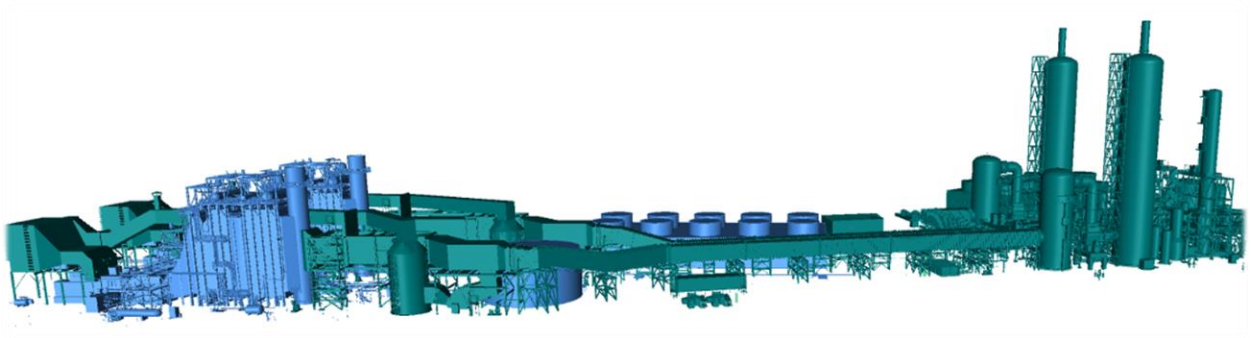

Submitted by PI: John Sholes
CCS Systems Integration Leader
864-293-0353
john.sholes@ge.com
Signed:

Submitted June 28, 2024

Acknowledgment

This report was prepared by General Electric's Gas Power division with funding from the US Department of Energy, Office of Fossil Energy and Carbon Management, Carbon Capture R&D Program in collaboration with sub recipients Linde and Southern Company plus subcontractor Kiewit. This material is based upon work supported by the Department of Energy under Award Number DE-FE0032131.

Disclaimer

This report was prepared as an account of work sponsored by an agency of the United States Government. Neither the United States Government nor any agency thereof, nor any of their employees, makes any warranty, express or implied, or assumes any legal liability or responsibility for the accuracy, completeness, or usefulness of any information, apparatus, product, or process disclosed, or represents that its use would not infringe privately owned rights. Reference herein to any specific commercial product, process, or service by trade name, trademark, manufacturer, or otherwise does not necessarily constitute or imply its endorsement, recommendation, or favoring by the United States Government or any agency thereof. The views and opinions of authors expressed herein do not necessarily state or reflect those of the United States Government or any agency thereof.

Document Classification

This report is a Public Document.

Contributors

- **General Electric Gas Power**

  John Sholes (Principal Investigator), Dennis Bowin, Tiffany Camp, Todd Denman, Harvey Dunning, Brian Gallagher, Patrick Gallagher, Xiaojun Gao, Parag Kulkarni, Peter Murphy, Ray Pang, Brian Whitright, Michelle York

- **Linde**

  Dirk Jarmus, Minish Shah, Torsten Stoffregen

- **Southern Company**

  John Carroll

- **Kiewit**

  Alan Donovan, Bryan Lofgreen, Bob Slettehaugh

The contributors wish to acknowledge Nicole Shamitko-Klingensmith, PhD, PMP, NETL Federal Project Manager for Point Source Carbon Capture, for her counsel and support throughout this FEED study.

Cover Illustration

3D view of Barry Unit 6 with carbon capture was collaboratively created by GEGP, Linde, Southern Company, and Kiewit.

Table of Contents

Executive Summary 17
1 Introduction 19
2 Results for Task 2 – Engineering Design and Assessment 23
2.1 Task 2.1 - FEED Study Design Basis 23
2.1.1 General Information 23
2.1.2 CCS Design Philosophy 24
2.1.3 Site Conditions 25
2.1.4 Environmental Data 25
2.1.5 Flue Gas Specification 26
2.1.6 CO_2 Product Specifications and Additional Design Criteria 27
2.1.7 Utility Specifications 28
2.1.8 Emissions and Effluents 28
2.1.9 System of Measurement 28
2.1.10 Codes and Standards 28
2.1.11 Operation Philosophy 28
2.1.12 EGR Constraints 29
2.1.13 Cooling Water Design 29
2.1.14 Site Fuel 29
2.1.15 Basis of Process Design Document 30
2.1.16 Plant Heat Balances 42
2.1.17 Environmental / Permitting Requirements 56
2.1.18 Applicable Codes and Standards 58
2.2 Task 2.2 - FEED Study Conceptual Design 58
2.2.1 GT Exhaust Gas Recirculation (EGR) Go/No-Go 58
2.2.2 GT Upgrades to Recover Plant MW Output 59
2.2.3 Steam Supply Sources from current NGCC Plant for CCS demand 60
2.2.4 Cooling Water Integration Options with current NGCC Plant 61
2.3 Task 2.3 - Inside Battery Limits Detailed Design 62
2.3.1 CCS Process Description 62
2.3.2 CCS ISBL Heat and Material Balance 68
2.3.3 CCS Block Flow Diagram 71
2.3.4 ISBL Piping and Instrumentation Diagrams (P&IDs) 72

2.3.5 ISBL Plot Plan 73
2.3.6 ISBL Elevation View 74
2.3.7 ISBL Containment Concept 75
2.3.8 ISBL Battery Limit (Tie-in) Supply Conditions 76
2.3.9 ISBL Equipment List 76
2.3.10 ISBL Electrical Load List 76
2.3.11 ISBL Instrumentation & Controls (I&C) Overview / Control System Architecture 77
2.3.12 ISBL Principle Electrical One Line Diagram 82
2.3.13 ISBL General Electrical Design Specification 83
2.3.14 ISBL Emissions and Effluents 83
2.3.15 ISBL Utility and Chemical Consumption 83
2.3.16 ISBL Process, Plant and Environmental Safety 83
2.3.17 ISBL Subcontractor List 84
2.3.18 ISBL Details of Equipment and Module Foundation 84
2.3.19 Reclamation of Amine 85
2.4 Task 2.4 - Outside Battery Limits (OSBL) Detailed Design 85
2.4.1 OSBL Plot Plan 86
2.4.2 OSBL Piping & Instrumentation Drawings (P&IDs) 87
2.4.3 OSBL System Process Flow Diagram 88
2.4.4 OSBL System Water Mass Balance 89
2.4.5 OSBL Fire Protection Layout 90
2.4.6 CCS Admin Building Layout 90
2.4.7 OSBL 230-13.8 kV Substation General Arrangement 90
2.4.8 OSBL Mechanical Equipment List 90
2.4.9 OSBL Mechanical Terminal Point List 91
2.4.10 OSBL Electrical Equipment List 93
2.4.11 OSBL Electrical Load List 93
2.4.12 OSBL Electrical Engineering Standards and Symbols 93
2.4.13 OSBL Overall Electrical One-Line Diagram 94
2.4.14 OSBL 230-13.8 kV Substation One-Line Diagram 96
2.4.15 OSBL 125 VDC Electrical One-Line Diagram 96
2.4.16 OSBL Plant UPS Electrical One-Line Diagram 96
2.4.17 OSBL Overall Communication Diagram 97

2.4.18 OSBL/ISBL Crane Lifting Plan 98
2.4.19 OSBL/ISBL Transportation Plan 99
2.4.20 OSBL Electrical System Analysis 111
2.4.21 OSBL DC Battery and UPS Calculations 111
2.4.22 OSBL Grounding Study 111
2.4.23 OSBL Cable Ampacity Study 111
2.4.24 OSBL Mechanical Design Criteria 111
2.4.25 OSBL Electrical Design Criteria 111
2.4.26 OSBL Site Geotechnical Guidance 111
2.4.27 OSBL Structural Design Criteria 112
2.4.28 OSBL Wire and Cable Specification 112
2.4.29 OSBL DC System Specification 112
2.4.30 OSBL Uninterruptible Power Supply (UPS) Specification 112
2.4.31 OSBL Electrical Enclosures Specification 112
2.4.32 OSBL Cable Bus Specification 112
2.4.33 OSBL DCS Specification 112
2.4.34 OSBL Main Power Transformer Specification 112
2.4.35 OSBL Secondary Unit Substation Transformers Specification 113
2.4.36 OSBL Substation Electrical Enclosure Specification 113
2.4.37 OSBL Substation Circuit Breakers Specification 113
2.4.38 OSBL Substation Outdoor Equipment Specification 113
2.4.39 OSBL Metal Buildings Specification 113
2.4.40 Constructability Review 113
2.4.41 OSBL Subcontractor List 123
2.4.42 OSBL Details of Equipment and Module Foundations 124
2.5 Task 2.5 - FEED Study Plant Integration Design 126
2.5.1 GT Exhaust Gas Recirculation (EGR) System 126
2.5.2 Integration of Steam Supply for the CCS 132
2.5.3 Existing NGCC P&ID with Tie-in markup 135
2.5.4 Gas Turbine Modifications 135
2.5.5 Steam Turbine Modifications 136
2.5.6 HRSG / Stack Modifications 138
2.5.7 CCS Flexibility/Operability 139

2.5.8 NGCC+CCS Operating Philosophy 143
2.5.9 HAZOP Review 169
2.5.10 3D Images of Integrated NGCC+CCS 169
2.6 Task 2.6 - FEED Study Cost Assessment 174
2.6.1 Basis of Costs 174
2.6.2 Capital Expense (CapEx) Cost Breakdown Structure 176
2.6.3 CapEx Estimating Process 178
2.6.4 CapEx (TPC) Values and Uncertainties 180
2.6.5 Operating Expense (OpEx) Cost 182
3 Results for Task 3 – Commercial Assessment 183
3.1 Business Case Analysis (BCA) 183
3.2 Techno-Economic Analysis (TEA) and Lifecycle Analysis (LCA) 184
3.2.1 Summary of TEA 184
3.2.2 Summary of LCA 192
3.3 Technology Environmental Health and Safety Risk Assessment 193
4 Results for Task 4 – Public Policy Considerations 194
4.1 Environmental Justice Analysis 194
4.2 Economic Revitalization and Jobs Creation Outcome Analysis 194

Table of Figures

Figure 1: View of US Gulf Coast, Plant Barry, and Citronelle (Sequestration Location) 25
Figure 2: Bucks, AL Annual Temperature Profile 26
Figure 3: Bucks, AL Annual Humidity Profile 26
Figure 4: Barry Unit 6 NGCC+CCCS Heat Balance Diagram 53
Figure 5: Sankey Diagram for Final Design Case 56
Figure 6: Typical NGCC Steam Extraction Locations for CCS 60
Figure 7: Existing Barry Unit 6 Plant Cooling Tower 62
Figure 8: 3D View of Preliminary ISBL Foundations 84
Figure 9: Preliminary 3D View of OSBL Foundations 125
Figure 10: EGR Process Flow Diagram. 127
Figure 11: EGR P&ID (1 of 2) 127
Figure 12: EGR P&ID (2 of 2). 127
Figure 13: EGR Layout – 2D Plan and Elevation Views 129
Figure 14: EGR Layout – 3D 130
Figure 15: EGR Duct Route 131
Figure 16: Proposed Configuration for EGR Mixer 132
Figure 17: New Extraction Location in Existing Steam Turbine LP Crossover 134
Figure 18: Typical GE D11 Cross Section with Locations Requiring Modification to Support CCS 137
Figure 19: Conceptual Elevation View of Steam Turbine Cross-Section with Butterfly Valve 138
Figure 20: Conceptual 3D View of Steam Turbine with Butterfly Valve 138
Figure 21: Proposed HRSG and Stack Modifications (Conceptual) 138
Figure 22: 3D Model of Integrated NGCC+ CCS – Elevation View with Labels 170
Figure 23: 3D Model of Integrated NGCC+ CCS – Plan View 170
Figure 24: 3D Model of Integrated NGCC+ CCS – Bird's-Eye View (1 of 2) 171
Figure 25: 3D Model of Integrated NGCC+ CCS – Bird's-Eye View (2 of 2) 171
Figure 26: 3D Model of Integrated NGCC+CCS – Carbon Capture Island 172
Figure 27: 3D Model of Integrated NGCC+CCS – View from GT Inlet 172
Figure 28: 3D Model of Integrated NGCC+CCS – Power Island (1 of 2) 173
Figure 29: 3D Model of Integrated NGCC+CCS – Power Island (2 of 2) 173
Figure 30: NETL Definition of CapEx from page 45 of 'Cost and Performance Baseline for Fossil Energy Plants Volume 1: Bituminous Coal and Natural Cas to Electricity' report dated September 24, 2019 174

Figure 31: NETL Capital Cost Levels and Elements from page 10 of 'Cost Estimation Methodology for NETL Assessments of Power Plant Performance' report dated February 2021 175

Figure 32: NETL Summary of CapEx and OpEx Components from 'Cost and Performance Baseline for Fossil Energy Plants Volume 1: Bituminous Coal and Natural Cas to Electricity' report dated September 24, 2019 175

Figure 33: Breakdown of Break-even CO_2 Sales Price Excluding T&S 189

Figure 34: Projected Change in Break-Even CO2 Sales Price with Increase in CCS Capture Efficiency 190

Figure 35: Projected Change in LCOE with Increase in CCS Capture Efficiency 192

Table of Tables

Table 1: Division of Design Responsibility for FEED Study 24
Table 2: Flue Gas Specification 27
Table 3: CO2 Product Specification 27
Table 4: Barry Unit 6 Natural Gas 30
Table 5: Summary of Heat Balance Configurations 42
Table 6: Heat Balance for Current NGCC Configuration 44
Table 7: Heat Balance for NGCC with DLN 2.6+ GT Upgrade and EGR 45
Table 8: Heat Balance for NGCC with Minimal GT Upgrades 46
Table 9: Heat Balance for NGCC with Significant GT Upgrades 47
Table 10: Heat Balance for NGCC with Significant GT Upgrades and ST HP Throttle Extraction 48
Table 11: Heat Balance for NGCC with Maximum GT Upgrades 49
Table 12: Heat Balance for Final NGCC+CCS Configuration 50
Table 13: Heat Balance Data for Final Design Case Streams 1 – 9 54
Table 14: Heat Balance Data for Final Design Case Streams 10 – 18 54
Table 15: Heat Balance Data for Final Design Case Streams 19 – 27 55
Table 16: Heat Balance Data for Final Design Case Streams 28 – 36 55
Table 17: Heat Balance Data for Final Design Case Streams 37 - 44 56
Table 18: Summary of Performance and Cost with and without EGR 59
Table 19: Preliminary ISBL Foundation Dimensions 85
Table 20: Dimensions Used for On-Site Transportation Study 99
Table 21: Preliminary ISBL Foundation Dimensions 126
Table 22: Cost Basis for Engineered Equipment and Subcontracts 179
Table 23: Division of Responsibility for Cost Development 180
Table 24: Estimated CapEx for Existing 2x1 7F Barry Unit 6 Combined Cycle 181
Table 25: CapEx for Carbon Capture System in December 2018 USD 182
Table 26: CapEx for Carbon Capture System in November 2023 USD 182
Table 27: Operations and Maintenance Costs 183
Table 28: Performance Summary for Final Design Case 187
Table 29: Air Emissions Summary for Final Design Case 187
Table 30: Carbon Balance for Final Design Case 187
Table 31: Summary of TEA 189

Table of Appendices

Appendix A: Techno-Economic Analysis (TEA) ..... A-1 to A-69
Appendix B: Statement of Project Objectives (SOPO) ..... B-1 to B-19
Appendix C: Basis of Design for CCS ..... C-1 to C-25
Appendix D: GT Fuel Analysis D-1
Appendix E: Additional Heat Balance Stream Data for Table 12 ..... E-1 to E-2
Appendix F: EGR Viability Assessment ..... F-1 to F-8
Appendix G: Down Select NGCC+CCS Configuration ..... G-1 to G-16
Appendix H: ISBL Piping and Instrumentation Diagrams ..... H-1 to H11
Appendix I: ISBL Equipment List I-1
Appendix J: ISBL Electrical Load List J-1
Appendix K: ISBL General Electrical Design Specification K-1
Appendix L: OSBL Piping and Instrumentation Diagrams ..... L-1 to L-32
Appendix M: OSBL Fire Protection Layout M-1
Appendix N: CCS Admin Building Layout N-1
Appendix O: OSBL 230-13.8 kV Substation General Arrangement O-1
Appendix P: OSBL Mechanical Equipment List ..... P-1 to P-3
Appendix Q: OSBL Electrical Equipment List ..... Q-1 to Q-2
Appendix R: OSBL Electrical Load List ..... R-1 to R-6
Appendix S: OSBL Electrical Engineering Standards and Symbols S-1
Appendix T: OSBL 230-13.8 kV Substation One-Line Diagram T-1
Appendix U: OSBL 125 VDC Electrical One-Line Diagram U-1
Appendix V: OSBL Plant UPS Electrical One-Line Diagram V-1
Appendix W: OSBL Electrical System Analysis ..... W-1 to W-234
Appendix X: OSBL DC Battery and UPS Calculations ..... X-1 to X-10
Appendix Y: OSBL Grounding Study ..... Y-1 to Y-23
Appendix Z: OSBL Ampacity Study ..... Z-1 to Z-36
Appendix AA: OSBL Mechanical Design Criteria ..... AA-1 to AA-14
Appendix BB: OSBL Electrical Design Criteria ..... BB-1 to BB-8
Appendix CC: OSBL Site Geotechnical Guidance CC-1
Appendix DD: OSBL Structural Design Criteria ..... DD-1 to DD-25
Appendix EE: OSBL Wire and Cable Specification ..... EE-1 to EE-36
Appendix FF: OSBL DC System Specification ..... FF-1 to FF-11

Appendix GG: OSBL Uninterruptible Power Supply (UPS) Specification ..... GG-1 to GG-11
Appendix HH: OSBL Electrical Enclosures Specification..... HH-1 to HH-76
Appendix II: OSBL Cable Bus Specification..... II-1 to II-15
Appendix JJ: OSBL DCS Specification..... JJ-1 to JJ-26
Appendix KK: OSBL Main Power Transformer Specification..... KK-1 to KK-23
Appendix LL: OSBL Secondary Unit Substation Transformers Specification.....LL-1 to LL-14
Appendix MM: OSBL Substation Electrical Enclosures Specification.....MM-1 to MM-53
Appendix NN: OSBL Substation Circuit Breakers Specification..... NN-1 to NN-12
Appendix OO: OSBL Substation Outdoor Equipment Specification.....OO-1 to OO-13
Appendix PP: OSBL Metal Buildings Specification ..... PP-1 to PP-68
Appendix QQ: EGR Load List .....QQ-1 to QQ-3
Appendix RR: EGR Equipment List RR-1
Appendix SS: Gas Turbine Modifications ..... SS-1 to SS-4
Appendix TT: Capital and O&M Cost Summary ..... TT-1 to TT-18
Appendix UU: Business Case Analysis (BCA) ..... UU-1 to UU-15
Appendix VV: Lifecycle Analysis (LCA) ..... VV-1 to VV-98
Appendix WW: Technology Environmental Health and Safety Risk Assessment ..... WW-1 to WW-35
Appendix XX: Environmental Justice Analysis..... XX-1 to XX-26
Appendix YY: Economic Revitalization and Jobs Creation Outcome Analysis ..... YY-1 to YY-16

Acronyms

AASHTO	American Association of State Highway and Transportation Officials
ACI	American Concrete Institute
ACS	American Community Survey
ADA	Americans with Disabilities Act of 1990
ADEM	Alabama Department of Environmental Management
AeN	Steam Turbine Effective Nozzle Area
AG	Above Ground
AGP	Gas Turbine Advanced Gas Path upgrade
AHJ	Authority Having Jurisdiction
AHU	Air Handling Unit
AIA	Aluminum Interlocked Armor
AISC	American Institute of Steel Construction
AISE	Association of Iron and Steel Engineers
AISI	American Iron and Steel Institute
AIST	Association for Iron and Steel Technology
AMP	2-Amino-2-Methylpropanol
ANSI	American National Standards Institute
APC	Alabama Power Company
APSC	Alabama Public Service Commission
ASCE	American Society of Civil Engineers
ASHRAE	American Society of Heating, Refrigerating and Air-Conditioning Engineers
ASME	American Society of Mechanical Engineers
ASTM	American Society for Testing and Materials
ATSDR	Agency for Toxic Substances and Disease Registry
AUX	Auxiliary
AWG	American Wire Gauge
AWS	American Welding Society
AWWA	American Water Works Association
BACT	Best Achievable Control Technology
BARA	Bar Absolute (pressure relative to ambient pressure in bar)
BDC	Buildings Design Criteria
BOP	Balance of Plant
BTU	British Thermal Unit
CAA	Clean Air Act
CAD	Computer-Aided Design
CalISO	California Independent System Operator
CapEx	Capital Expense
CBV	Compressor Bleed Valve
CC	Combined Cycle
CCCR	Carbon Capture Control Room
CCP	Carbon Capture Plant
IRIS	Integrated Risk Information System
IRR	Internal Rate of Return
ISBL	Inside Battery Limits
ISO	International Organization for Standardization
IST	Initial Service Test
KEG	Kiewit Engineering Group
KPPH	1,000 Pounds per Hour
KW	Kilo Watt (1,000 Watts)
LCA	Life Cycle Analysis
LCIA	Life Cycle Impact Analysis
LCOE	Levelized Cost of Electricity ($/MW-hr)
LEL	Lower Explosive Limit
LFG	Landfill Gas
LGBTQ+	Lesbian, Gay, Bisexual, Transgender and Queer
LHV	Lower Heating Value (of fuel)
LP	Low Pressure (steam)
LPSH	Low Pressure Superheater (in HRSG)
LRFD	Load Resistance Factor Design
LSB	Steam Turbine Last Stage Bucket
LSZH	Low Smoke Zero Halogen
MACT	Maximum Achievable Control Technology
MBC	Model Based Control
MBMA	Metal Building Manufacturers Association
MCC	Motor Control Center
MCC	Mid Compressor Casing
mD	Millidarcy
MDEA	Methyldiethanolamine
MDR	Manufacturers Data Reports
MEA	Monoethanolamine
MECL	Gas Turbine Minimum Emissions Compliance Load
MERV	Minimum Efficiency Reporting Value
MM	1,000,000 (one million)
MRL	Minimum Risk Level
MSOP	Maximum Sustained Operating Pressure
MSW	Municipal Solid Waste
MT	Metric Tonne (1000 kg)
MTPD	Metric Tonnes Per Day
MTR	Material Test Reports
MW	Mega Watt (1,000 kW)
MWI	Modified Wobbe Index
NAAMM	National Association of Architectural Metal Manufacturers

CCS	Carbon Capture System
CCUS	Carbon Capture, Utilization, and Storage
CCW	Cooled Cooling Water
CDC	Compressor Discharge Casing
CDM	Continuous Dynamics Monitoring
CEJST	Climate and Economic Justice Screening Tool
CERCLA	Comprehensive Environmental Response and Liability Act of 1980
CF	Capacity Factor
CFD	Computational Fluid Dynamics
CFR	Code of Federal Regulations
CH4	Methane
CI	Gas Turbine Combustion Inspection
CISC	Canadian Institute of Steel Construction
CLAC	Closed Loop Acceleration Control
CLEC	Closed Loop Emissions Control
CMAA	Crane Manufacturers Association of America
CMU	Concrete Masonry Unit
CO_2 T&S	CO2 Transportation and Storage
CO_2e	Carbon Dioxide equivalent
CPE	Chlorinated Polyethylene
CPT	Cone Penetration Test
CRH	Cold Reheat (steam)
CRSI	Concrete Reinforcing Steel Institute
CRV	Combined Reheat Valve (at hot reheat)
CSAPR	Cross-State Air Pollution Rule
CSCV	Combined Stop and Control Valve (at HP inlet)
CSEF	Creep Strength Enhanced Ferritic
CW	Circulating Water (for cooling)
CWA	Clean Water Act
DAC	Direct Air Capture of CO_2
DB	Duct Burner in HRSG (to produce additional steam)
DCC	Direct Contact Cooler
DCS	Distributed Control System
DEIA	Diversity, Equity, Inclusion, and Accessibility
DGA	Diglycolamine
DLN	Dry Low NOx (GT combustor)
DOE	U.S. Department of Energy
EAP	Emergency Action Plan
EC	Gas Turbine Inlet Evaporative Cooler
EF	Emission Factor
EFW	Electric Fusion Welded
EGR	Exhaust Gas Recirculation
EGU	Electric Generating Unit
NACE	National Association for Corrosion Engineers
NDE	Nondestructive Examination
NDT	Nondestructive Testing
NEC	National Electric Code
NEMA	National Electrical Manufacturers Association
NEMS	National Energy Modeling System
NESHAP	National Emission Standards for Hazardous Air Pollutants
NET	Negative Emissions Technologies
NETL	National Energy Technology Laboratory
NFPA	National Fire Protection Association
NGCC	Natural Gas Combined Cycle
NIOSH	National Institute for Occupational Safety and Health
NNSR	Nonattainment New Source Review
NO	Normally Open
NOP	Normal Operating Point
NPDES	National Pollutant Discharge Elimination System
NPS	Nominal Pipe Size
NPV	Net Present Value
NRCS	National Resources Conservation Service
NSBE	National Society of Black Engineers
NSPS	New Source Performance Standards
NTI	New Technology Invention
O&M	Operation and Maintenance
OBB	Gas Turbine Over Board Bleed
OEHHA	Office of Environmental Health Hazard Assessment
OEM	Original Equipment Manufacturer
OpEx	Operating Expenses
OPP	Office of Pesticide Programs
ORO	Oak Ridge Operations Office
OSBL	Outside Battery Limits
OSHA	Occupational Safety and Health Administration
P&ID	Piping and Instrumentation Diagram
PA (SIPA)	Gas Turbine Power Augmentation (with steam injection to combustor)
PC	Pulverized Coal
PCC	Post Combustion Capture
PCCC	Post Combustion Carbon Capture
PDC	Power Distribution Center
PE	Polyethylene
PEECC	Packaged Electrical and Electronics Control Compartment
PEL	Permissible Exposure Level
PFD	Process Flow Diagram
PHWT	Post Weld Heat Treatment
PI	Principal Investigator

EHS or EH&S	Environmental Health and Safety
EI	Extended Interval
EIA	U.S. Energy Information Administration
EIO	Economic Input-Output
EJ	Environmental Justice
EPA	Environmental Protection Agency
EPR	Ethylene Propylene Rubber
ERCOT	Electric Reliability Council of Texas
ERW	Electric Resistance Welded
ETS	Enhanced Transient Stability
FACP	Fire Alarm Control Panel
FAT	Factory Acceptance Testing
FECM	U.S. DOE Office of Fossil Energy and Carbon Management
FEED	Front End Engineering Design
FEP	Fluorinated Ethylene Propylene
FMEA	Failure Modes and Effects Analysis
FNG	Fossil Natural Gas
FOA	Funding Opportunity Announcement
FOC	Fixed Operating Costs
FREP	Flame Retardant Ethylene Propylene
FRFPE	Flame Retardant Foam Polyethylene
FRP	Fiber Reinforced Polymer
FSD	False Start Drain
FUDS	Formerly Used Defense Site
FVNR	Full Voltage Non-Reversing
GCV	Gas Control Valve
GE	General Electric
GEGP	General Electric Gas Power
GHG	Greenhouse Gas
GPP	Generator Protection Panel
GSU	Generator Step Up Transformer
GT	Gas Turbine
GTP	Gas Turbine Performance
GUI	Graphical User Interface
GWP	Global Warming Potential
HAP	Hazardous Air Pollutants
HAZOP	Hazard and Operability Analysis
HDPE	High-Density Polyethylene
HFC	Hydrofluorocarbon
HGP	Gas Turbine Hot Gas Path
HHBP	Human Health Benchmarks for Pesticides
HHV	Higher Heating Value (of fuel)
HMB	Heat and Mass Balance
PM	Particulate Matter
PO	Polyolefin
PPRTV	Provisional Peer Reviewed Toxicity Values
PQR	Procedure Qualification Record
PRG	Preliminary Remediation Goals
PSD	Prevention of Significant Deterioration
PSFM	Power Systems Financial Model
PV	Process Value
PVC	Polyvinyl Chloride
PZ	Piperazine
R&D	Research and Development
RAIS	Risk Assessment Information System
RCRA	Resource Conservation and Recovery Act
RCSC	Research Council on Structural Connections
RME	Reasonable Maximum Exposure
RNG	Recycled Natural Gas or Renewable Natural Gas
SARA	Superfund Amendments and Reauthorization Act
SCR	Selective Catalytic Reduction (in HRSG)
SCS	Southern Company Services
SDS	Safety Data Sheet or Seller's Deliverable Schedule or Supplier Data Sheet
SERC	Southeastern Electric Reliability Council
SESO	Southeastern Electric Reliability Council South
SH	Superheater (HRSG)
SHPE	Society of Hispanic Engineers
SIH	Stripper Interstage Heater
SIS	Safety Instrument System
SMACNA	Sheet Metal and Air Conditioning Contractors' National Association
SOPO	Statement of Project Objectives
SP	Setpoint
SRV	Stop Ratio Valve
SSOV	Safety Shutoff Valve
SSOVV	Safety Shutoff Vent Valve
SSPC	Society for Protective Coatings
ST	Steam Turbine
STPD	Short Tons Per Day
STSC	Superfund Health Risk Technical Support Center
SWE	Society of Women Engineers
TC	Tinned Copper
TEA	Techno-Economic Analysis
TMR	Triple Modular Redundancy
TP	Transition Piece
TPC	Total Plant Cost
TRI	Toxic Release Inventory

HOR0	High Output Row 0 GT Compressor
HP	Horsepower
HP	High Pressure (steam)
HPSH	High Pressure Superheater (in HRSG)
HR	Heat Rate
HRH	Hot Reheat (steam)
HRSG	Heat Recovery Steam Generator
HVAC	Heating, Ventilation, and Air Conditioning
IBC	International Building Code
IBEW	International Brotherhood of Electrical Workers
IBH	Gas Turbine Inlet Bleed Heat
IEEE	Institute of Electrical and Electronic Engineers
IGV	Inlet Guide Vanes
IP	Intermediate Pressure (steam)
IPCC	Intergovernmental Panel on Climate Change
IPSH	Intermediate Pressure Superheater (in HRSG
IR	Infrared
TSCA	Toxic Substance and Control Act
TWA	Time Weighted Average
UCOR	URS/CH2M Oak Ridge LLC
UG	Under Ground
UHC	Unburned Hydro-Carbons
UL	Underwriter Laboratories
UPS	Uninterruptible Power Supply
VAV	Variable Air Volume
VFD	Variable Frequency Drive
VOC	Variable Operating Cost or Volatile Organic Compound
VRE	Variable Renewable Energy
VSV	Variable Stator Vanes
WC	Water Consumption
WIOA	Workforce Innovation and Opportunity Act
WPS	Welding Procedure Specification
WW	Water Wash
XO	Steam Turbine Crossover (at input to double flow LP section)
XPS	Extruded Polystyrene Board

Executive Summary

This is the final scientific / technical report for Front End Engineering Design (FEED) study "Retrofittable Advanced Combined Cycle Integration for Flexible Decarbonized Generation" funded by the US Department of Energy (DOE), Office of Fossil Energy and Carbon Management (FECM), Carbon Capture R&D Program under award DE-FE0032131. The prime recipient is General Electric Company working through its Gas Power division (GEGP) with subrecipients Southern Company and Linde Engineering plus subcontractor Kiewit.

Southern Company's Plant Barry, a 2x1 7F.04 CCGT, is the host site. GEGP led the overall integration of the carbon capture system (CCS) with the existing natural gas combined cycle (NGCC) facility. Linde provided the detailed process engineering and equipment costing for the carbon capture island. Kiewit focused on plant layout, constructability, and installation. With the FEED study finished, the engineering is approximately 50% complete towards the detailed design package needed to proceed to procure, install, build, commission, and operate the integrated NGCC+CCS facility.

This FEED study focuses on retrofitting a 95% CO_2 capture system with attention on plant integration. The study was particularly challenging due to unique and substantial cost impacts related to global sourcing challenges associated with COVID. Additional incentives, regulatory support, and dispatch certainty are needed to move forward with implementing CCS at this or other sites in the US. This FEED study highlights the value of integrating NGCC+CCS and is a template for future CCS retrofit studies.

Configuration Summary

The recommended Natural Gas Combined Cycle (NGCC)+CCS configuration includes:

- Exhaust Gas Recirculation (EGR)
- Gas Turbine (GT): Compressor (7F04-200), Combustor (DLN 2.6+), Hot Gas Path (Tech 1.0)
- Modified Steam Turbine (ST) steam paths: High Pressure (HP) +15%, Intermediate Pressure (IP) +15%, Low Pressure (LP) -15%

Performance Summary

The NGCC+CCS performance with the configuration listed above is summarized in Exhibit ES-1. Note that this configuration reclaims the performance loss associated with carbon capture and is five (5) MW higher on seasonal average than current operation without CCS. Additional details are available in Section 2.1 of this report.

	Current NGCC Configuration (Pre-CCS)	NGCC + CCS Configuration (Post CCS)
Net NGCC HHV Performance	551.9 MW / 6,676 Btu/kWhr	556.9 MW / 7,660 Btu/kWhr
NGCC HHV Heat Consumption	3,684 MM Btu/hr	4,266 MM Btu/hr
CCS Aux Loads	---	39.2 MW
CO_2 Captured	---	482.7 kpph (1.63 MM MT/yr)
CCS Reboiler Specific Heat Duty	---	2.7 GJ/tonne CO_2 Captured

Exhibit ES-1: Performance Summary

Cost Summary

Cost values for this configuration are summarized in Exhibit ES-2. Additional details are available in Sections 2.6 and 3.2 of this report.

	2023 USD
CCS CapEx – Total Plant Cost	$ 1,083 MM
CCS OpEx	$ 32.5 MM / yr
Cost of CO_2 Captured – Excluding Transport and Storage	$ 100.2 / tonne CO_2
Levelized Cost of Electricity (LCOE) – Including Transport and Storage	$ 86.6 / MWhr

Exhibit ES-2: Cost Summary

Pathway to 99% Capture

Although this study primarily focused on 95% capture, GEGP developed a path to 99% capture which is summarized in Exhibit ES-3. The main driver for the increase in break-even CO_2 sales price and LCOE is fuel cost. Additional information on this path to 99% capture is available in Section 3.2 of this report.

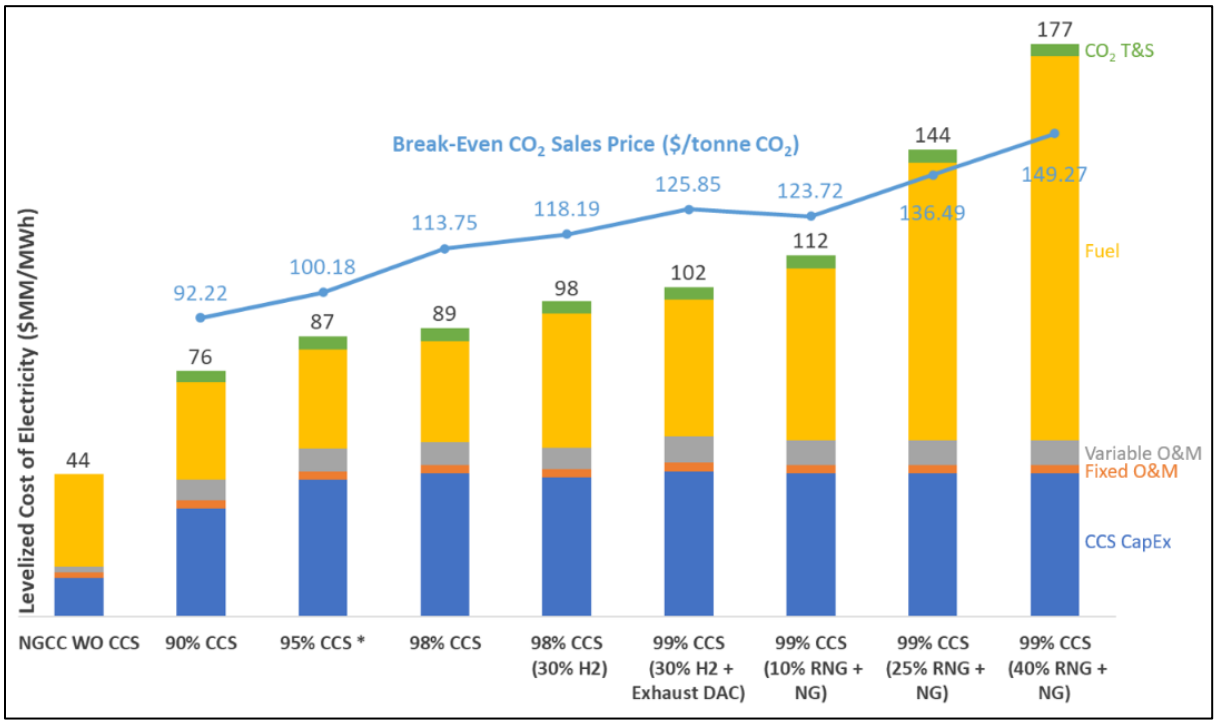

Exhibit ES-3: Projected Break-Even CO_2 Sales Price and LCOE from 90% to 99% CO_2 Capture

Project Status as of June 2024

There are no technical obstacles related to NGCC+CCS integration at Plant Barry. The primary obstacle is lack of regulatory policy / economic incentive. Currently, adding CCS to Plant Barry will require both a capital offset and payment to assure 85% capacity factor (i.e. priority dispatch) on top of the MW make-right that is already factored into the proforma. When the Alabama Public Service Commission concludes that decarbonization is in the best interest of the rate-payers, adding CCS to Plant Barry will become economically practical.

1 Introduction

The US DOE issued funding opportunity announcement FOA-0002515 on April 22, 2021, for "Carbon Capture R&D for Natural Gas and Industrial Point Sources, and Front-End Engineering Design Studies for Carbon Capture Systems at Industrial Facilities and Natural Gas Plants". GEGP submitted a proposal under Area of Interest (AOI) 3b: Front-End Engineering Design Studies for Carbon Capture Systems at Existing (Retrofit) Domestic NGCC Power Plants. GEGP was awarded a FEED study under DE-FE00032131 which began on February 11, 2022 with the goal of exploring ways of lowering the cost of carbon capture while reducing CO_2 emissions from natural gas power plants by up to 95%. Since the award, GEGP engineers, along with peers from Southern Company, Linde Engineering, and Kiewit, have studied the engineering, cost, and integration of the proposed carbon capture project.

Site for NGCC+CCS

The Barry Unit 6 plant is a 2x1 7FA natural gas combined cycle (NGCC) unit operated by Alabama Power, a subsidiary of Southern Company, in Bucks, Alabama. Barry Unit 6 was commissioned in 2001 and is a part of the larger James M. Barry Electric Generating Plant which includes a coal-fired unit (Barry Unit 5) and a sister 2x1 7FA NGCC unit (Barry Unit 7). Barry Unit 6 was selected for this FEED study because of its proximity to available storage and because of Southern Company's strong stance on carbon capture. Note that this study did not include the pipeline to or the injection wells in Citronelle, Alabama.

Summary of FEED Study Process

The work started with conceptual design of the NGCC+CCS, looking at the potential inclusion of EGR as well as GT and ST upgrades to offset the performance loss associated with adding carbon capture to the existing NGCC plant. All efforts to review and select EGR, GT, and ST configurations were done in the first three (3) months of the FEED study and used very preliminary conceptual designs, with estimated performance impacts and cost estimates. The resulting options were then compared combining the capital expenditure (CapEx), net NGCC+CCS output, and net NGCC+CCS efficiency to assess a net present value (NPV) and to recommend the EGR, GT, and ST configuration to proceed into the detailed design phase of the FEED study. The first assessment was for the potential inclusion of EGR. EGR significantly deceases CCS CapEx by reducing the total flue gas flow while increasing the CO_2 concentration in the flue gas. The CCS CapEx reduction was significantly larger than the CapEx associated with the EGR system itself. The EGR system also resulted in improved NGCC+CCS output and efficiency due to lower steam extraction requirements of the CCS driven by the higher CO_2 concentrations in the flue gas. The GT upgrades that were reviewed ranged from modest GT upgrades, to a larger GT compressor and combustor upgrade, and finally to a GT flange to flange replacement with a larger 7F.05 GT paired with corresponding ST retrofits. The selected GT and ST upgrades for the final FEED study design were the GT compressor and combustor upgrade and larger HP and IP steam paths and a smaller LP steam path.

After the conceptual configuration selection was completed, a detailed design effort was done both in the NGCC (GT, ST, Heat Recovery Steam Generator (HRSG)) and the retrofit CCS. This detailed design, complete with detailed heat and material balances, piping and instrumentation diagrams, equipment lists, and plant layout, allowed for development of a detailed operating philosophy, failure mode and effects analysis (FMEA), and hazard and operability analysis (HazOp). The detailed design was then subject to a bottoms-up cost estimation for both equipment and installation, as well as fixed and variable operating and maintenance costs.

The costs and the performance were combined to complete the techno-economic analysis (see Appendix A) to identify the marginal cost of electricity ($/MWhr) as well as the CO_2 sales price and emission penalty ($/tonne CO_2 captured). The cost and performance were also combined to develop the project proforma and first year cash flow for use in the business case analysis.

A sensitivity study was undertaken to identify the maximum achievable carbon capture rate with the FEED study technology (98% based on existing field pilot data) as well as the pathway to 99% carbon capture rate, which required the use of negative emissions technologies (NETs).

The CCS design, performance, and costing were also combined to complete a life cycle analysis which shows the true reduction in CO2 emissions using a “cradle to grave” approach.

Finally, the following evaluations were completed to round-out the FEED study: technology environmental health and safety assessment, environmental justice analysis, and economic revitalization and job creation outcomes analysis.

List of Specific FEED Study Tasks

The FEED study is divided into tasks and sub-tasks for execution:

Task 1 - Project Management
Task 2 - Front-End Engineering Study
Task 3 - Commercial Assessments
Task 4 - Public Policy Considerations

Task 2 covers the Engineering Design effort of the FEED Study, from the initial definition of the design basis to the conceptual design activities of the integrated NGCC+CCS plant to assess multiple potential configurations, including steam supply source and the potential of applying exhaust gas recirculation. From these design activities, a single NGCC+CCS configuration was chosen to be studied in detail. The down-selected NGCC+CCS configuration was then designed in detail including plant interfaces between the core carbon capture and the balance of NGCC plant to assess the high fidelity (-20% to +30%) capital cost and operating and maintenance (O&M) cost estimates for retrofitting the power plant with 95% CO_2 capture add-on.

Task 3 covers the commercial assessments of the completed CCS design and costing done in Task 2. These assessments include the Business Case Analysis, the Techno-Economic Analysis, the Life Cycle Analysis, and the Technology Environmental Health and Safety Assessment.

Task 4 covers the Public Policy Considerations of the proposed CCS retrofit, including the Environmental Justice Analysis and the Economic Revitalization and Job Creation Outcomes Analysis.

The specific commitments in the FEED study are outlined in the Statement of Project Objectives (SOPO), available in Appendix B, including:

Subtask 2.1 – FEED Study Design Basis – defines the design basis for completing the FEED study

- Site Characteristics, Ambient Conditions and Fuel Feedstock characteristics
- Plant Heat Balances
- Environmental/permitting requirements
- Load start/stop profile

- Limits on Gas Turbine combustor oxygen levels and lean stability limits for EGR

Subtask 2.2 – FEED Study Conceptual Design – defines the configuration for the FEED study

- Assess Optimal Steam Extraction sources for CCS
- Assess cooling water integration
- Impact of EGR
- Maximum sustainable EGR level

Subtask 2.3 – FEED Study Inside Battery Limits (ISBL) Detailed Design – detailed design of carbon capture plant

- Process Flow Diagrams (PFDs), Piping and Instrumentation Diagrams (P&IDs) and Heat and Material Balances (HMBs)
- Plot Plan, Summary of Effluents, Emissions, Consumables, Auxiliary Loads and Tie-in details
- Major Process and Mechanical Equipment Specifications and Data Sheets
- Electrical loads lists and one-line diagrams
- Preliminary equipment and module foundation designs

Subtask 2.4 – FEED Study Outside Battery Limits (OSBL) Detailed Design – detailed design of ISBL interfaces with NGCC Plant

- Piping and Instrumentation Diagrams (P&IDs) and Plot Plan
- Major Process and Mechanical Equipment Specifications and Data Sheets
- Electrical loads lists and one-line diagrams
- Preliminary equipment and module foundation designs
- Required Tie-in points details, including piping and exhaust gas ducting layouts

Subtask 2.5 – FEED Study Plant Integration Design –design of integrating CCS with existing NGCC Plant

- Operability including grid requirements
- Steam Extraction for NGCC and required Steam Turbine modifications
- Exhaust Gas Recirculation, including HRSG and stack modifications
- Integration with current utilities, including water treatment
- Integration of existing plant controls
- Design Reviews, Constructability Review, HAZOP reviews and Steam Turbine Operability review

Subtask 2.6 – FEED Study Cost Assessment – define Capital and O&M costs for the CO_2 capture add-on

- High Fidelity (-20% to +30%) Costs based on detailed design and equipment specifications
- Costs based on combination of Vendor quotes and previous experience
- O&M Costs co-developed with plant owner and CCS technology provider

Subtask 3.1 – FEED Study Business Case Analysis – Assemble business case to justify implementing NGCC with carbon capture

- Market size for NGCC + CCS
- Proforma and 1st Year Cashflow for NGCC + CCS
- Technology Overview

- Market Analysis
- Future deployment projection
- Potential Benefits of the technology

Subtask 3.2 – FEED Study Techno-Economic Analysis – Comparison of Reference case NGCC to addition of 95% CCS efficiency using annual cash flow pro forma for Levelized Cost of Electricity (LCOE) consistent with FOA guidance

- Process Block Diagram, Heat Balance Table, and Performance Summary
- NGCC/CCS Operating Philosophy
- Utilization of landfill gas (LFG) to achieve net zero upstream and direct emissions from the fuel

Subtask 3.2 – FEED Study Life Cycle Analysis – establish the cradle-to-delivered electricity life cycle impacts of the NGCC with CCS and Negative Emissions Technologies (NETs)

- LCA Methodology
- Life Cycle Impact Assessment
- Life Cycle Interpretation
- Base Case (95% Carbon Capture) plus NGCC with max (98%) Capture and 22% renewable natural gas (RNG), sourced assessment of carbon capture process focusing on EH&S risks, both in construction/commissioning and in normal operation.
- air and water emissions
- water utilization
- solid waste streams
- potential environmental impacts of the technology including toxicological effects and hazards of emissions and waste streams

Subtask 3.3 – FEED Study Technology Environmental Health and Safety Assessment – review of Construction/Operating Risks introduced by the CCS system

- Complete FMEA and Auxiliary Load Summary
- Air Emissions
- Carbon and Water Balances
- Plot Plan, ISBL and OSBL Equipment Lists
- Capital Costs, Operations and Maintenance Costs
- Techno-Economic Analysis – Cost of Capture and CO_2 Avoided Cost
- Maximum Carbon Capture Assessment and Capture Sensitivity Study

Subtask 4.1 – FEED Study Environmental Justice Analysis – Demonstrate support of Executive Order 14008 goals through design of 95% CCS

- Incorporate natural resource usage considerations into the design
- Evaluate potential co-benefits of the carbon capture technology

Subtask 4.2 – FEED Study Economic Revitalization and Job Creation Outcomes Analysis – In accordance with Executive Order 13985 evaluate economic and workforce impacts of application of proposed capture system

- Assess job creation associated with construction and operation of capture system
- Partner with community resources to develop training programs to support skills growth, particularly among groups that are historically underserved or underrepresented

2 Results for Task 2 – Engineering Design and Assessment

2.1 Task 2.1 - FEED Study Design Basis

This section of the report contains the design basis for the FEED study and includes the following:

- 2.1.1 to 2.1.11 – Summary of Basis of Design for CCS document jointly developed by Southern Company, GEGP, Linde, and Kiewit (full document Revision 2 dated 08/04/2022 is available in Appendix C)
- 2.1.12 – EGR Constraints
- 2.1.13 – Cooling Water Design
- 2.1.14 – Site Fuel
- 2.1.15 – Basis of Process Design for CCS
- 2.1.16 – Plant Heat Balances
- 2.1.17 – Environmental / Permitting Requirements
- 2.1.18 – Applicable Codes and Standards

2.1.1 General Information

Barry Unit 6 was selected for this FEED study because of its proximity to available storage and because of Southern Company's strong stance on carbon capture. While Barry Unit 6 currently operates at a very high capacity factor, it is expected in the future, with the addition of renewables on the grid, that the capacity factor will go down significantly. The addition of carbon capture is expected to offset some of that decrease in capacity factor and keep the facility economically viable far into the future.

Various components of the CCS system were designed by either GEGP, Linde, or Kiewit, as shown in Table 1.

	Organization with Design Responsibility
NGCC	
Base NGCC Modifications	GEGP
Gas Turbine Modifications	GEGP
EGR	
Duct	GEGP
Duct Support Steel	Kiewit
Mechanical Equipment	GEGP
Piping, Valves, Specialties, Supports	GEGP
Gas Turbine Inlet Filter House Mods	GEGP
Wire and Cable	Kiewit
Foundations	Kiewit
Inside Battery Limits (ISBL)	
Duct	Linde
Support Steel	Linde
Mechanical Equipment	Linde
Piping, Valves, Specialties, Supports	Linde
Electrical Equipment, PDC, Transformers	Linde
Wire and Cable	Linde
Foundations	Kiewit
Outside Battery Limits (OSBL)	
All Equipment and Materials	Kiewit
Administration Building	Kiewit
PDCs and Substation, Main Power Transformer	Kiewit
Mechanical Equipment	Kiewit
Piping, Valves, Specialties, Supports	Kiewit
Duct between HRSG outlet / EGR inlet (by GE) and ISBL inlet (by Linde)	Kiewit

Table 1: Division of Design Responsibility for FEED Study

2.1.2 CCS Design Philosophy

The design philosophy includes:

- The design flue gas flow is provided by two gas turbines (exiting 2 HRSG stacks).
- The CO_2 product flow is based on a CO_2 capture rate of 95%.
- The plant will be designed with turndown capability.
- Equipment and materials shall be designed for a minimum design life of 20 years.
- The facility will be designed to operate for a minimum of 311 days per annum (7,446 hours/year) which is equivalent to an 85% capacity factor.
- The plant will include redundancy.

2.1.3 Site Conditions

Southern Company's Plant Barry, operated by Alabama Power, is located just north of Mobile, Alabama in the unincorporated community of Bucks, Alabama. The proposed CO_2 injection well is located in the city of Citronelle, Alabama, which is approximately 21 miles northwest of Bucks. Ample space is available at the site to integrate the carbon capture facility.

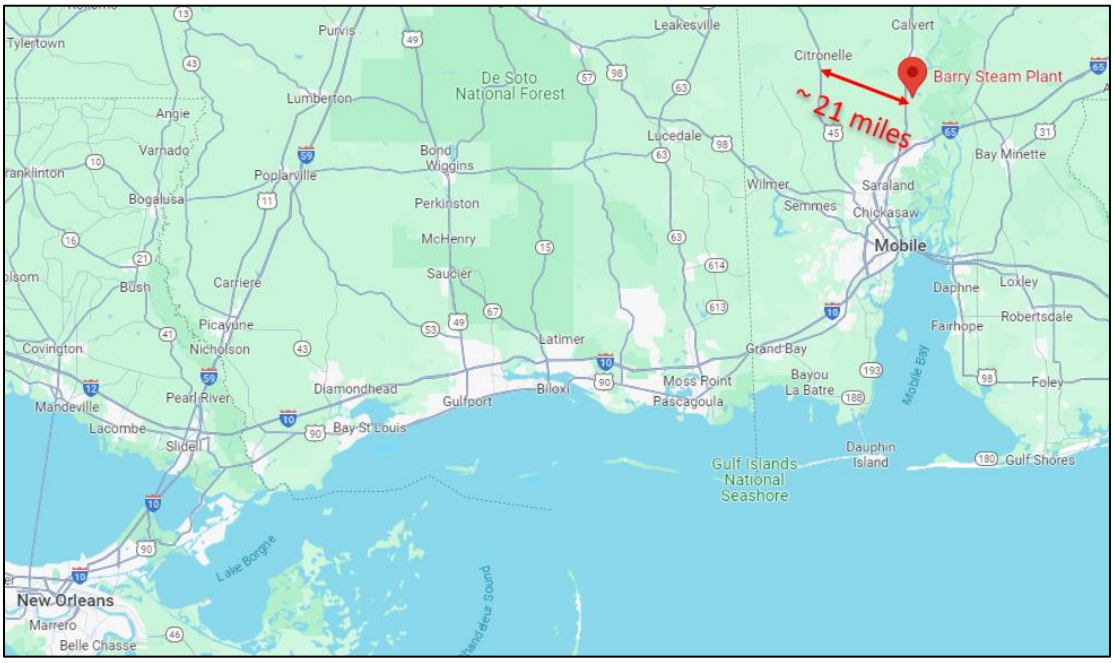

Figure 1: View of US Gulf Coast, Plant Barry, and Citronelle (Sequestration Location)

In addition to location information, the following site conditions are available in Section 3 of Appendix C:

- General requirements
- Layout
- Battery limits
- Transport routes to site
- Special requirements due to location

2.1.4 Environmental Data

Annual ambient temperature and humidity profiles for Bucks, AL are provided below.

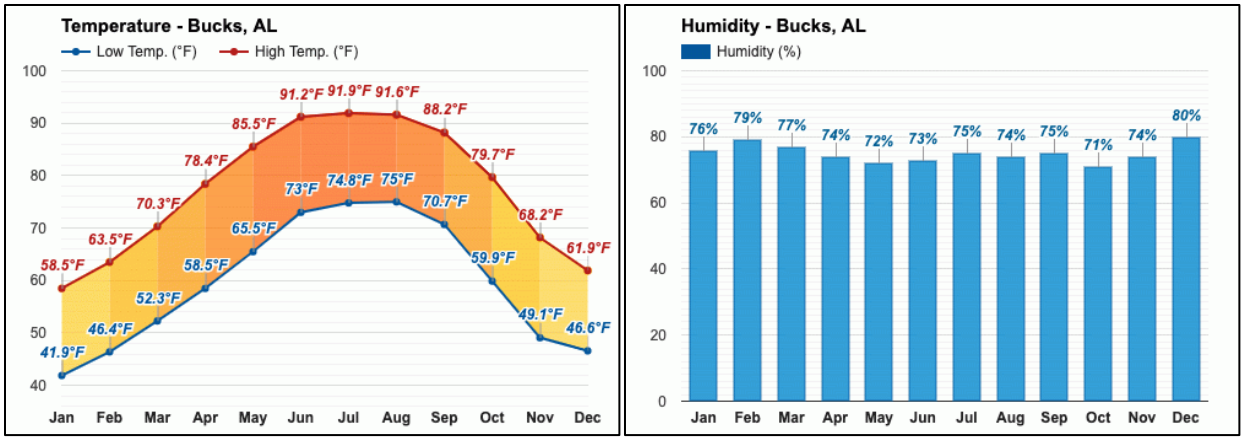

Figure 2: Bucks, AL Annual Temperature Profile

Figure 3: Bucks, AL Annual Humidity Profile

For simplicity, down-select and go/no-go decisions were made by weighting the ambient temperature at baseload. The weighted average annual ambient conditions are: 76.1°F (dry bulb) / 76.3% Relative Humidity / 64.85°F (wet bulb).

In addition to temperature and humidity data, the following information is available in Section 4 of Appendix C:

- Air pressure
- Rainfall intensity
- Wind
- Snow
- Earthquake
- Soil conditions
- Special conditions

2.1.5 Flue Gas Specification

At design conditions (two NGCCs operating), flue gas with the following parameters will be delivered to the CCS facility:

	Units	Value at Final Design Case
Total Mass Flow at HRSG Exit	kpph	4,894
HRSG Exit Temperature	F	205.9
Stack Constituents		
N_2	mol%	74.78
O_2	mol%	7.06
CO_2	mol%	6.66
H_2O	mol%	10.61
Ar	mol%	0.89
Total GT Exhaust Emissions at HRSG Exit		
NOx	ppmvd	9
NOx Correction O_2 Value	% O_2	15
NOx and NO_2	lb/hr	144.4
NH_3	ppmvd	---
CO	ppmvd	9
CO	lb/hr	66.4
Unburned Hydrocarbon (UHC)	ppmvw	7
UHC (dry)	lb/hr	29.6
VOC	ppmvw	1.4
VOC (dry)	lb/hr	5.9
Particulate Emissions	US-Filtered, lbm/hr	4.1
Particulate Emissions	US-Total, lbm/hr	8.2
Total CO_2 Mass Flow at HRSG Exit	lb/hr	555,480

Table 2: Flue Gas Specification

2.1.6 CO_2 Product Specifications and Additional Design Criteria

Captured CO_2 will meet the following conditions at the battery limit:

Description	Unit	Requirement at Design Case
Pressure	psig	2,200
Temperature	F	< 120
Composition		
CO_2	vol%	>= 97%
Total Hydrocarbon	vol%	< 4
N_2 and Argon	vol%	< 0.5
H_2O	lbs/MMSCF	45
O_2	ppmvd	10
H_2S	ppmvd	< 10
Total Sulphur	ppmvd	< 30

Table 3: CO2 Product Specification

2.1.7 Utility Specifications

Requirements for the following utilities are available in Section 7 of Appendix C:

- Electric power
- Steam
- Cooling water
- Demineralized water
- Potable water
- Service Water
- Fire water
- Instrument air
- Plant / service air
- Nitrogen
- Chemicals

2.1.8 Emissions and Effluents

Requirements for the following emissions and effluents are available in Section 8 of Appendix C:

- Gaseous emissions
- Liquid effluents
- Steam condensate
- Solid waste
- Noise

2.1.9 System of Measurement

U.S. measurements are required.

2.1.10 Codes and Standards

U.S. standards and design codes are required.

2.1.11 Operation Philosophy

The operation philosophy includes:

- The CCS shall be designed for automatic operation.
- Continuous supervision by a panel operator shall be always ensured.
- A field operator will need to address routine inspections, maintenance activities, and any batch sampling required.
- Layout of equipment, piping, and structures will be arranged to allow accessibility for normal operations and maintenance.
    - Temporary access is defined as free and unobstructed access to plant components, which can be operated and maintained via mobile devices or scaffolding.

- Permanent access is defined as free and unobstructed access to plant components, which can be operated and maintained from grade or permanent installed platforms, stairs, or ladders.
- Plant access roads will be sized for passage of the most spacious temporary access or lifting equipment required to maintain components in the area the access road is leading towards.

2.1.12 EGR Constraints

Based on combustion lab testing on the DLN2.6+ combustion system, the following limitations will be considered for all EGR configurations considered for this FEED study:

- Wide operability is required for any level of EGR – this means inclusion of DLN 2.6+ combustor configuration instead of the currently installed DLN 2.6 combustor
- DLN2.6+ combustion lab testing (not funded under this FEED study), confirmed adequate operability at 40% EGR at full load and 20% EGR at minimum load
- EGR loop is only operated when CCS is online
- EGR will require rigorous fuel sulfur standards
- An exhaust gas cleaning system is required to remove the vast majority of pollutants and particulates from the exhaust gas, including SOx, prior to introduction to the GT inlet
- The maximum amount of EGR that is feasible is primarily constrained by the percent of O_2 that is delivered to the combustion system; This O_2 limit must be derived through lab testing for a given configuration, combustion system, and set of operating condition; For the DLN2.6+ system operating in the 7F GT at baseload, the limit is approximately 15% O_2

A detailed description of exhaust gas recirculation is available in Section 2.5.1.

2.1.13 Cooling Water Design

The new CCS cooling water system is planned to be a “wet” system, consisting of a new multi-cell cooling tower to cool both the ISBL CCS and the EGR systems. The cooling tower will pump “open” cooling water to plate and frame cooled cooling water (CCW) heat exchangers, and the opposite “closed” circuit will pump CCW from the plate and frame heat exchangers to the various cooling demands in the ISBL CCS and EGR systems.

2.1.14 Site Fuel

The fuel burned in the GT at Barry Unit 6 is typical US pipeline natural gas that is primarily methane with very low levels of sulfur. Southern Company tests the fuel regularly. Appendix D provides a representative summary of the fuel from one of those 3rd party tests. The constituents in Table 4 were used to develop performance for the FEED study.

	Units	Value
Methane	wt%	95.69
Ethane	wt%	2.14
Carbon Dioxide	wt%	0.80
Propane	wt%	0.62
Butane	wt%	0.29
Nitrogen	wt%	0.28
Hexane	wt%	0.11
Pentane	wt%	0.07

Table 4: Barry Unit 6 Natural Gas

2.1.15 Basis of Process Design Document

The Basis of Process Design Issue 1 dated 11/11/2022 was jointly created by representatives of GEGP, Linde, Kiewit, and Southern Company. This document, available below, was produced by Linde and contains information such as main design parameters, utilities, site information, and emissions and effluents.

Plant Description: Post Combustion Capture Plant		
Linde Project No.: 3710A46M	Client Project No.: --	
Linde Project Code: Bucks	Client Project Code: ---	
Linde Doc. No.: &AE 1000 A-SE 1001 (EN)	Client Doc. No.: ---	Client Revision: ---

Basis of Process Design

IFU	1.0	11.11.2022	Y. Voloshchuk	I. Richter	D. Jarmus	
Status	Issue	Date	Prepared	Reviewed	Approved	Remarks

Page 1 of 11

Linde Project No:	3710A46M	Linde Issue	Client Project No:	--	Client Rev.
Linde Doc No:	&AE 1000 A-SE 1001 (EN)	1.0	Client Doc No:	---	---

CONTENT

1	**General**	**3**
1.1	Specific Objectives	3
1.2	Project Language	3
1.3	Units of Measurement	3
1.4	Properties Calculation	4
2	**Main Design Parameters**	**5**
2.1	General Requirements to PCC Plant	5
2.2	Feed Specification for PCC Plant	5
2.3	Product Specifications	5
2.4	Plant Capacity and Case Definition	6
2.4.1	Hydraulic Design Case	6
2.4.2	Normal Operation Case	6
2.4.3	Turn-Down Case	6
2.5	Design Operating Hours	6
2.6	Overdesign Margins	6
3	**Utilities**	**7**
3.1	Cooling Water	7
3.2	Make-up Water	7
3.3	Steam	7
3.4	Steam Condensate	8
3.5	Potable Water	8
3.6	Service Water	8
3.7	Fire Water	8
3.8	Instrument Air	8
3.9	Service Air	9
3.10	Nitrogen	9
3.11	Power Supply	9
4	**Site Information**	**10**
4.1	Geographic Data	10
4.2	Ambient Conditions and Meteorological Data	10
5	**Emissions and Effluents**	**11**
5.1	Emissions	11
5.2	Noise	11
5.3	Effluents	11

Linde Project No:	3710A46M	Linde Issue	Client Project No:	--	Client Rev.
Linde Doc No:	&AE 1000 A-SE 1001 (EN)	1.0	Client Doc No:	---	---

1 General

GE intends to decarbonize its natural gas combined cycle power plant (Alabama Power's James M. Barry Electric Generating Plant in Bucks, AL) with a post combustion capture (PCC) plant, to reduce the CO_2 footprint of this asset. The PCC shall be based on the OASE® blue technology. The PCC plant will be of commercial scale and designed to achieve a 95% removal of CO_2 from the flue gas stream.

1.1 Specific Objectives

The specific objectives of the project are to complete the process design optimization for the proposed site, the engineering design package, and the project cost and schedule estimation.

1.2 Project Language

Project language is English.

1.3 Units of Measurement

The US units shall be applied for the execution of the project.

Parameter	Units
Temperature	°F
Pressure	psia, psig
Vacuum	psia
Weight	lbs
Volume	ft^3
Liquid Mass Flow	lb/h
Liquid Volume Flow	US gal/min
Gas Mass Flow	lb/h
Gas Volume Flow	scfm
Density	lb/ft^3
Enthalpy	btu/lb
Heat Duty/Power	btu/h, hp
Heat Duty	mmbtu/h
Thermal Conductivity	btu/ft °F
Transfer Rate	btu/h ft^3 °F
Fouling Resistance	ft^2 °F h/btu
Viscosity	cP

Linde Project No:	3710A46M	Linde Issue	Client Project No:	--	Client Rev.
Linde Doc No:	&AE 1000 A-SE 1001 (EN)	1.0	Client Doc No:	---	---

Parameter	Units
Equipment Size	in
Pipe Length	ft
Pipe Diameter	in
Vessel Nozzle Sizes	in
Distance/Length – Structural/Civil	ft, in
Area – Structural/Civil	ft^2

1.4 Properties Calculation

Normal conditions refer to a temperature of 32 (thirty-two) °F, to a pressure of 29.9 (twenty-nine point nine) in Hg.

Properties calculations are based on the ideal gas assumption.

Linde Project No:	3710A46M	Linde Issue	Client Project No:	--	Client Rev.
Linde Doc No:	&AE 1000 A-SE 1001 (EN)	1.0	Client Doc No:	---	---

2 Main Design Parameters

All data given in the present document is descriptive only and may not be fully comprehensive.

2.1 General Requirements to PCC Plant

The PCC target capture rate must be minimum 95%. All possible losses during CO_2 raw gas compression must be considered.

2.2 Feed Specification for PCC Plant

The following table lists flue gas parameters for the PCC plant:

	Units	Design Case	Max. Case	Min. Case
Mass flow (wet)	klb/hr	4.905,4	4.877,4	3.165,2
Temperature	°F	203,0	209,9	210,0
Pressure	psia	14,34	14,34	14,52
Composition				
CO_2	mol%	6,70	6,58	6,15
H_2O	mol%	10,10	11,56	9,64
Nitrogen	mol%	75,21	73,98	75,16
Argon	mol%	0,90	0,88	0,89
Oxygen	mol%	7,10	7,00	8,16
Impurities				
CO	lb/hr	132,8	133,6	42,2
NO	lb/hr	274,36	272,46	78,1
NO_2	lb/hr	14,44	14,34	4,1
Unburnt HC	lb/hr	59,2	59,2	18,8
VOC	lb/hr	2,8	2,8	2,8

Schematic overview of the flue gas injection into PCC plant:

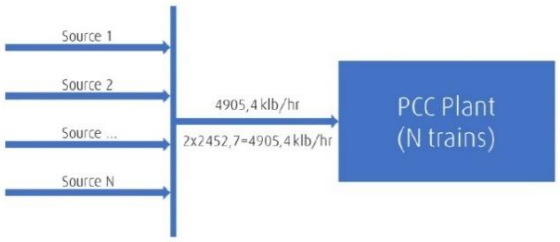

Linde Project No:	3710A46M	Linde Issue	Client Project No:	--	Client Rev.
Linde Doc No:	&AE 1000 A-SE 1001 (EN)	1.0	Client Doc No:	---	---

2.3 Product Specifications

The product of the designed plant is the supercritical CO_2 at the following conditions:

	Units	Values
Temperature	°F	< 120
Pressure	psig	2.200
Composition		
CO_2	mol%	> 97
N_2+Ar	mol%	< 0,5
Total Hydrocarbons	mol%	< 4
O_2	ppmv	10
H_2S	ppmv	< 10
Total sulphur	ppmv	< 30
H_2O	lbs/MMSCF	45

2.4 Plant Capacity and Case Definition

The plant capacity is defined by the inlet volume flow of the PCC plant. Several operation cases such as normal operation, maximum, and minimum cases shall be investigated.

2.4.1 Hydraulic Design Case

The hydraulic design case for the PCC plant is the max. case. Overdesign is to be foreseen for this case. All corresponding equipment will be designed for the max. case with overdesign.

2.4.2 Normal Operation Case

The normal operation case for the PCC plant is the design case. The quality of all products for this case must comply with the corresponding product quality grade. Emissions and effluents as well as consumptions of main utilities must be provided for this case.

2.4.3 Turn-Down Case

The turn-down case for the PCC plant is the min. case.

2.5 Design Operating Hours

Average time of operation is 7446 hours per annum

2.6 Overdesign Margins

The overdesign margin must be applied to the hydraulic design case.

Linde Project No:	3710A46M	Linde Issue	Client Project No:	--	Client Rev.
Linde Doc No:	&AE 1000 A-SE 1001 (EN)	1.0	Client Doc No:	---	---

3 Utilities

3.1 Cooling Water

No new cooling tower is required. The cooling water is available at plant's battery limit at following conditions:

	Units	Values
Temperature	°F	86
Pressure	psia	as required
Return temperature	°F	104
Return pressure	psia	35

Linde standard LS 931 02 for quality specification.

3.2 Make-up Water

Demineralized water is supplied at battery limit at following conditions:

	Units	Design Case	Max. Case	Min. Case
Temperature	°F	65	95	95
Pressure	psia	95	95	95

Demineralized water quality:

	Units	Values
Sodium	ppbv	< 2
Chloride	ppbv	2
Sulfate	ppbv	2
Reactive Silica	ppbv	10
Conductivity	µS/cm	0,1

3.3 Steam

Steam is available at battery limit at following conditions:

	Units	Design Case
Temperature	°F	20 superheated
Pressure	psia	54,6

Linde Project No:	3710A46M	Linde Issue	Client Project No:	--	Client Rev.
Linde Doc No:	&AE 1000 A-SE 1001 (EN)	1.0	Client Doc No:	---	---

3.4 Steam Condensate

Steam condensate must be returned to battery limit at following conditions:

	Units	Min.	Norm.	Max.
Pressure	psig	100	125	150

3.5 Potable Water

Potable water is available at battery limit at following conditions:

	Units	Min.	Norm.	Max.
Temperature	°F	50	60-80	90
Pressure	psig		106	

3.6 Service Water

Service water is available at battery limit at following conditions:

	Units	Min.	Norm.	Max.
Temperature	°F	75	90	100
Pressure	psig	60	80	95

3.7 Fire Water

Fire water is available at battery limit at following conditions:

	Units	Min.	Norm.	Max.
Temperature	°F	50	60-80	90
Pressure	psig		185	

3.8 Instrument Air

Instrument air is available at battery limit at following conditions:

	Units	Min.	Norm.	Max.
Temperature	°F		80	
Pressure	psig	80	90	100
Dew point	°F	-40	-40	-40

Linde Project No:	3710A46M	Linde Issue	Client Project No:	--	Client Rev.
Linde Doc No:	&AE 1000 A-SE 1001 (EN)	1.0	Client Doc No:	---	---

3.9 Service Air

Service air is available at battery limit at following conditions:

	Units	Min.	Norm.	Max.
Temperature	°F		80	
Pressure	psig	80	90	100

3.10 Nitrogen

Nitrogen is not available.

3.11 Power Supply

Power is supplied with the following voltage levels:

Voltage level	Phase	Frequency
34,5 kVAC	3	60 Hz
13,8 kVAC	3	60 Hz

Linde Project No:	3710A46M	Linde Issue	Client Project No:	--	Client Rev.
Linde Doc No:	&AE 1000 A-SE 1001 (EN)	1.0	Client Doc No:	---	---

4 Site Information

4.1 Geographic Data

Location	15300 US-43, Bucks, AL 36512
Elevation above sea level	23 ft
Latitude	31° 0′ 22′′ N
Longitude	88° 0′ 40′′ W
Seismic class	D; Risk: III, Ss=0,095 g, S1 = 0,059g; SDC: B

4.2 Ambient Conditions and Meteorological Data

	Units	Values
Atmospheric temperature Max	°F	105
Atmospheric temperature Min	°F	0
Relative humidity	%	75
Atmospheric pressure	psia	14,7
Rain precipitation (intensity)	in/d	18,3 in/d
Average snow precipitation	PSF	0
Wind velocity	mph	172

Linde Project No:	3710A46M	Linde Issue	Client Project No:	--	Client Rev.
Linde Doc No:	&AE 1000 A-SE 1001 (EN)	1.0	Client Doc No:	---	---

5 Emissions and Effluents

5.1 Emissions

Treated flue gas will be routed to atmosphere. Local emission limits must be considered.

The limits below are permit limits based on original construction permit/design. If changes are made that impact how the unit operates, emission rates, etc., it will be necessary to look at emissions from 5 years prior to construction of the project and work with the state department of environmental quality to develop new permit limits.

Permit limits for parameters decreased or unaffected by the PCC process would be expected to stay the same as shown below. Parameters increased by the PCC process will have to be evaluated with the state environmental office to determine new permit limits. The emission values from the PCC plant will need to be communicated to the local authorities. They will compare that to the best available control technology to determine the permit limit.

In addition to NO_x, CO, VOC, and PM that are listed in the current facility permit, the impact of adding carbon capture on additional criteria pollutants such as SO_2, PM10, PM2.5, and GHG will be evaluated.

	Per CT	Remarks
NO_x	0.013 lb/mmBtu, not to exceed 27.7 lb/hr; equates to a BACT limit of 3.5 ppm at15% O_2	CEMS monitor is used for monitoring NOx on a rolling 3-hour average for 40 CFR Part (Acid Rain Program) and used for demonstrating compliance for 40 CFR 60
CO	0.06 lb/mmBtu, not to exceed 127 lb/hr 15 ppm (at 17.6% O_2)	Compliance is determined by EPA Test method 10 of App A in 40 CFR 60; biennial stack test
Particulate matter	0.011 lb/mmBtu, not to exceed 22.4 lb/hr	Compliance is determined by EPA Test method 5 or 17 of App A in 40 CFR 60; biennial stack test
VOC	0.015 lb/mmBtu, not to exceed 31.8 lbs/hr 7 ppm (at 17.4% O2)	Compliance is determined by EPA Test method 25, 25A or 25B of App A in 40 CFR 60: biennial stack test
NH3	No permit limit for NH_3 slip	NA

5.2 Noise

No special requirements for noise emissions.

5.3 Effluents

Liquid effluents from PCC plant include process condensate (condensed water vapor from flue gas) and wastewater (water condensed from compression, chilling, and/or reclaiming processes). The later may contain traces of amines, degradation products, and must be treated in a biological wastewater treatment.

2.1.16 Plant Heat Balances

To support Task 2.2 (FEED Study Conceptual Design), a variety of heat balances were created to evaluate possible NGCC+CCS plant configurations. The following heat balances are provided in Tables 6 through 12:

	Current NGCC	NGCC with DLN 2.6+ GT Upgrade and EGR	CCS	NGCC with Minimal GT Upgrades	NGCC with Significant GT Upgrades	NGCC with Maximum GT Upgrades
Table 6	X					
Table 7		X	X			
Table 8		X	X	X		
Table 9		X	X		X	
Table 10		X	X		X	
Table 11		X	X			X
Table 12		X	X		X	

Table 5: Summary of Heat Balance Configurations

Note the following while reviewing these heat balances:

- Values are for two (2) GTs
- Evaporative cooler is on when ambient is 50°F or above
- DLN 2.6+ GT combustion upgrade is required with EGR
- Minimal, significant, and maximum GT upgrades are in addition to the DNL 2.6+ combustion upgrade and are further described below
- In cases with significant or maximum GT upgrade, the GT exhaust flow is limited to 4.1MM lb/hr to fit within a single CCS absorber vessel per GT
- Values for LP steam extraction to CCS include both LPSH and ST LP crossover
- EGR is 40% of HRSG outlet flow
- CO_2 capture efficiency is 95%
- Steam heat load without EGR is 3.0 GJ / tonne CO_2 captured; with EGR is 2.7 GJ / tonne CO_2 captured
- All configurations, apart from the Table 6 configuration, include the ST modifications described in Section 2.5.5
- Detailed description of each heat balance:

  Table 6 – Current NGCC Configuration – This heat balance includes all updates done to date, such as High Output Row Zero (HOR0) GT compressor upgrade. This heat balance excludes EGR, GT upgrades related to CCS, CCS, and steam extraction.

  Table 7 – NGCC with DLN 2.6+ GT Upgrade and EGR – This heat balance is the current NGCC configuration (Table 6 configuration) plus DLN 2.6+, EGR on, and CCS on. Steam for CCS is supplied from HRSG LPSH outlet and ST LP crossover extraction.

  Table 8 – NGCC with Minimal GT Upgrades – This heat balance is the NGCC with DLN2.6+ GT Upgrade and EGR (Table 7 configuration) plus minimal GT upgrades, EGR on, and CCS on. Steam

for CCS is supplied from HRSG LPSH outlet and ST LP crossover extraction. The minimal GT upgrades consist of: Advanced Gas Path (AGP) Tech 1.0 that includes advanced Hot Gas Path (HGP) cooling upgrades and material upgrades (stage 2 and stage 3 buckets) that allows a significant increase in GT firing temperature and plant output and efficiency.

Table 9 – NGCC with Significant GT Upgrades – This heat balance is the NGCC with DLN2.6+ GT Upgrade and EGR (Table 7 Configuration) plus significant GT upgrades, EGR on, and CCS on. Steam for CCS is supplied from HRSG LPSH outlet and ST LP crossover extraction. The significant GT upgrades consist of: Advanced Gas Path (AGP) Tech that includes advanced Hot Gas Path (HGP) cooling upgrades and material upgrades (stage 2 and stage 3 buckets) that allows a significant increase in GT firing temperature, and the larger .05 GT compressor that allows significantly more GT airflow and significantly more plant output.

Table 10 – NGCC with Significant GT Upgrades and ST HP Throttle Extraction – This heat balance is the Table 9 configuration with an additional steam extraction location. Steam for CCS is supplied from ST HP throttle, HRSG LPSH outlet, and ST LP crossover extraction. This heat balance was run with both EGR off and EGR on, and was used for the EGR viability assessment available in Appendix F.

Table 11 – NGCC with Maximum GT Upgrades – This heat balance is the NGCC with DLN2.6+ GT Upgrade and EGR (Table 7 configuration) plus maximum GT upgrades, EGR on, and CCS on. Steam for CCS is supplied from HRSG LPSH outlet and ST LP crossover extraction. The maximum GT upgrades consist of replacement with the full 7F.05, which allows a significant increase in GT firing temperature and plant output.

Table 12 – Final NGCC+CCS Configuration – The final configuration is the Table 10 configuration, with heat balances for multiple ambients. This configuration was selected because it maximizes NGCC MW and CO_2 capture amounts to reduce the levelized $/MW-hr and $/tonne CO_2 (see Appendix G). Note that most ambients are run with a ST HP throttle pressure of ~ 1850 psi which maintains 5% margin to maximum allowable pressure. The last column (76F) is the weighted average annual ambient and is run with a ST HP throttle pressure of ~1950 psi which is maximum allowable pressure. Values in the last column are used in the TEA (Appendix A).

Current NGCC Configuration

		25F	59F	95F
Gas Turbine				
Power Output	kW per GT	205,912	190,108	167,621
Heat Rate (LHV)	Btu/kW-hr	8,995.3	9,056.2	9,386.4
Exhaust Flow	lb/hr	3,841,902	3,697,177	3,373,245
Exhaust Temperature	F	1145.5	1134.7	1169.4
Fuel Temperature	F	80	80	80
Exhaust Composition				
Ar	mol%	0.0089	0.0088	0.0086
N_2	mol%	0.7473	0.7403	0.7184
O_2	mol%	0.1206	0.1217	0.1166
CO_2	mol%	0.0410	0.0395	0.0391
H_2O	mol%	0.0822	0.0896	0.1174
HRSG Flue Gas to CCS				
Flue Gas Flow (per HRSG)	lb/hr	---	---	---
Flue Gas Pressure	psia	---	---	---
Flue Gas Temperature	F	---	---	---
NGCC Steam to CCS				
Temperature after Attemperation	F	---	---	---
Pressure at ST LP Crossover Outlet	psia	---	---	---
Flow Summary after Attemperation				
Contribution from LP Sources	lb/hr	---	---	---
Contribution from ST HP Throttle	lb/hr	---	---	---
Total Flow to CCS	lb/hr	---	---	---
EGR				
Temperature at EGR Outlet / Near GT Inlet	F	---	---	---
Flow Summary				
Flow at HRSG Outlet / EGR Inlet	lb/sec	---	---	---
Flow of H_2O Condensate from EGR DCC	lb/sec	---	---	---
Flow at EGR Outlet / Near GT Inlet	lb/sec	---	---	---
Conditions at GT Compressor Inlet				
Flow	lb/sec	---	---	---
Temperature	F	---	---	---
RH	%	---	---	---
Composition				
Ar	mol%	---	---	---
N_2	mol%	---	---	---
O_2	mol%	---	---	---
CO_2	mol%	---	---	---
H_2O	mol%	---	---	---
Plant Performance				
Without CCS Aux Loads				
Gross NGCC Output	kW	623,008	581,383	528,799
Net NGCC Output	kW	614,321	573,143	520,870
Gross NGCC Heat Rate (HHV)	Btu/kW-hr	6,588.3	6,562.4	6,593.4
CCS Aux Loads				
CO_2 Capture Process	MWe	---	---	---
CO_2 Compression	MWe	---	---	---
With CCS Aux Loads				
Net NGCC+CCS Output	kW	---	---	---
Net NGCC+CCS Heat Rate (HHV)	Btu/kW-hr	---	---	---
Weighted Average Annual				
Net NGCC Output	kW	551,869		
Net NGCC Heat Rate (HHV)	Btu/kW-hr	6,579.0		

Table 6: Heat Balance for Current NGCC Configuration

NGCC with DLN 2.6+ GT Upgrade and EGR

		25F	59F	95F
Gas Turbine				
Power Output	kW per GT	197,637	185,613	170,927
Heat Rate (LHV)	Btu/kW-hr	9,057.6	9,203.7	9,419.8
Exhaust Flow	lb/hr	3,789,504	3,643,432	3,435,487
Exhaust Temperature	F	1140.0	1153.9	1175.7
Fuel Temperature	F	80	80	80
Exhaust Composition				
Ar	mol%	0.0091	0.0090	0.0088
N_2	mol%	0.7625	0.7550	0.7418
O_2	mol%	0.0734	0.0729	0.0702
CO_2	mol%	0.0672	0.0664	0.0660
H_2O	mol%	0.0878	0.0967	0.1132
HRSG Flue Gas to CCS				
Flue Gas Flow (per HRSG)	lb/hr	3,789,504	3,643,432	3,435,487
Flue Gas Pressure	psia	14.7	14.7	14.7
Flue Gas Temperature	F	227.7	217.0	207.9
NGCC Steam to CCS				
Temperature after Attemperation	F	330.3	330.3	330.3
Pressure at ST LP Crossover Outlet	psia	72.5	72.5	72.5
Flow Summary after Attemperation				
Contribution from LP Sources	lb/hr	568,605	542,625	511,402
Contribution from ST HP Throttle	lb/hr	---	---	---
Total Flow to CCS	lb/hr	568,605	542,625	511,402
EGR				
Temperature at EGR Outlet / Near GT Inlet	F	77	77	77
Flow Summary				
Flow at HRSG Outlet / EGR Inlet	lb/sec	421.0	404.8	381.7
Flow of H_2O Condensate from EGR DCC	lb/sec	15.0	16.8	20.1
Flow at EGR Outlet / Near GT Inlet	lb/sec	406.0	388.0	361.6
Conditions at GT Compressor Inlet				
Flow	lb/sec	1,023.3	984.0	927.8
Temperature	F	45.7	66.1	88.0
RH	%	1.000	0.933	0.839
Composition				
Ar	mol%	0.0095	0.0094	0.0092
N_2	mol%	0.7936	0.7854	0.7715
O_2	mol%	0.1584	0.1568	0.1534
CO_2	mol%	0.0281	0.0278	0.0276
H_2O	mol%	0.0105	0.0206	0.0383
Plant Performance				
Without CCS Aux Loads				
Gross NGCC Output	kW	554,445	531,030	495,480
Net NGCC Output	kW	546,265	523,032	487,755
Gross NGCC Heat Rate (HHV)	Btu/kW-hr	7,154.7	7,128.9	7,201.0
CCS Aux Loads				
CO_2 Capture Process	MWe	17.752	17.268	16.581
CO_2 Compression	MWe	15.883	15.251	14.491
With CCS Aux Loads				
Net NGCC+CCS Output	kW	512,630	490,513	456,684
Net NGCC+CCS Heat Rate (HHV)	Btu/kW-hr	7,738.3	7,717.8	7,812.8
Weighted Average Annual				
Net NGG+CCS Output	kW	476,383		
Net NGCC+CCS Heat Rate (HHV)	Btu/kW-hr	7,763.8		

Table 7: Heat Balance for NGCC with DLN 2.6+ GT Upgrade and EGR

NGCC with Minimal GT Upgrades

		25F	59F	95F
Gas Turbine				
Power Output	kW per GT	214,000	196,316	169,041
Heat Rate (LHV)	Btu/kW-hr	8,916.5	9,080.1	9,409.8
Exhaust Flow	lb/hr	3,789,504	3,643,432	3,435,487
Exhaust Temperature	F	1170.0	1183.9	1205.7
Fuel Temperature	F	80	81	82
Exhaust Composition				
Ar	mol%	0.0091	0.0090	0.0088
N_2	mol%	0.7621	0.7519	0.7394
O_2	mol%	0.0690	0.0678	0.0655
CO_2	mol%	0.0694	0.0686	0.0680
H_2O	mol%	0.0904	0.1028	0.1182
HRSG Flue Gas to CCS				
Flue Gas Flow (per HRSG)	lb/hr	2,273,731	2,186,062	2,061,294
Flue Gas Pressure	psia	14.7	14.7	14.7
Flue Gas Temperature	F	227.7	217.0	207.9
NGCC Steam to CCS				
Temperature after Attemperation	F	330.3	330.3	330.3
Pressure at ST LP Crossover Outlet	psia	72.5	72.5	72.5
Flow Summary after Attemperation				
Contribution from LP Sources	lb/hr	606,093	566,209	505,220
Contribution from ST HP Throttle	lb/hr	---	---	---
Total Flow to CCS	lb/hr	606,093	566,209	505,220
EGR				
Temperature at EGR Outlet / Near GT Inlet	F	77	77	77
Flow Summary				
Flow at HRSG Outlet / EGR Inlet	lb/sec	421.0	404.8	381.7
Flow of H_2O Condensate from EGR DCC	lb/sec	15.0	16.8	20.1
Flow at EGR Outlet / Near GT Inlet	lb/sec	406.0	388.0	361.6
Conditions at GT Compressor Inlet				
Flow	lb/sec	1023.3	984.0	927.8
Temperature	F	45.7	66.1	88.0
RH	%	1.000	0.933	0.839
Composition				
Ar	mol%	0.0095	0.0094	0.0092
N_2	mol%	0.7936	0.7854	0.7715
O_2	mol%	0.1584	0.1568	0.1534
CO_2	mol%	0.0281	0.0278	0.0276
H_2O	mol%	0.0105	0.0206	0.0383
Plant Performance				
Without CCS Aux Loads				
Gross NGCC Output	kW	583,629	551,441	490,503
Net NGCC Output	kW	575,490	543,625	483,149
Gross NGCC Heat Rate (HHV)	Btu/kW-hr	7,245.1	7,163.4	7,186.2
CCS Aux Loads				
CO_2 Capture Process	MWe	19.065	18.014	16.023
CO_2 Compression	MWe	16.850	15.920	14.161
With CCS Aux Loads				
Net NGCC+CCS Output	kW	539,576	509,691	452,965
Net NGCC+CCS Heat Rate (HHV)	Btu/kW-hr	7,836.6	7,750.2	7,781.7
Weighted Average Annual				
Net NGG+CCS Output	kW	485,420		
Net NGCC+CCS Heat Rate (HHV)	Btu/kW-hr	7,771.9		

Table 8: Heat Balance for NGCC with Minimal GT Upgrades

NGCC with Significant GT Upgrades

		25F	59F	95F
Gas Turbine				
Power Output	kW per GT	216,175	211,663	202,804
Heat Rate (LHV)	Btu/kW-hr	9,091.7	9,179.8	9,379.8
Exhaust Flow	lb/hr	4,091,701	4,091,688	4,068,662
Exhaust Temperature	F	1156.6	1162.7	1169.2
Fuel Temperature	F	80	80	80
Exhaust Composition				
Ar	mol%	0.0091	0.0090	0.0088
N_2	mol%	0.7624	0.7550	0.7419
O_2	mol%	0.0712	0.0713	0.0706
CO_2	mol%	0.0683	0.0672	0.0658
H_2O	mol%	0.0891	0.0976	0.1128
HRSG Flue Gas to CCS				
Flue Gas Flow (per HRSG)	lb/hr	4,091,701	4,091,688	4,068,662
Flue Gas Pressure	psia	14.7	14.7	14.7
Flue Gas Temperature	F	232.1	223.7	214.7
NGCC Steam to CCS				
Temperature after Attemperation	F	330.3	330.3	330.3
Pressure at ST LP Crossover Outlet	psia	72.5	72.5	72.5
Flow Summary after Attemperation				
Contribution from LP Sources	lb/hr	624,400	616,864	603,943
Contribution from ST HP Throttle	lb/hr	---	---	---
Total Flow to CCS	lb/hr	624,400	616,864	603,943
EGR				
Temperature at EGR Outlet / Near GT Inlet	F	77	77	77
Flow Summary				
Flow at HRSG Outlet / EGR Inlet	lb/sec	454.6	454.6	452.1
Flow of H_2O Condensate from EGR DCC	lb/sec	16.6	19.2	23.7
Flow at EGR Outlet / Near GT Inlet	lb/sec	438.0	435.4	428.4
Conditions at GT Compressor Inlet				
Flow	lb/sec	1104.9	1105.2	1099.4
Temperature	F	45.7	66.1	88.0
RH	%	1.000	0.930	0.836
Composition				
Ar	mol%	0.0095	0.0094	0.0092
N_2	mol%	0.7939	0.7857	0.7715
O_2	mol%	0.1575	0.1562	0.1536
CO_2	mol%	0.0286	0.0281	0.0275
H_2O	mol%	0.0105	0.0206	0.0382
Plant Performance				
Without CCS Aux Loads				
Gross NGCC Output	kW	608,251	605,549	589,022
Net NGCC Output	kW	599,725	596,957	580,430
Gross NGCC Heat Rate (HHV)	Btu/kW-hr	7,160.5	7,110.5	7,156.7
CCS Aux Loads				
CO_2 Capture Process	Mwe	18.751	18.751	18.675
CO_2 Compression	Mwe	17.231	17.058	16.743
With CCS Aux Loads				
Net NGCC+CCS Output	kW	563,743	561,148	545,011
Net NGCC+CCS Heat Rate (HHV)	Btu/kW-hr	7,725.8	7,673.0	7,734.5
Weighted Average Annual				
Net NGG+CCS Output	kW	553,771		
Net NGCC+CCS Heat Rate (HHV)	Btu/kW-hr	7,706.1		

Table 9: Heat Balance for NGCC with Significant GT Upgrades

NGCC with Significant GT Upgrades and ST HP Throttle Extraction

		Without EGR, 59F	With EGR On, 59F
Gas Turbine			
Power Output	kW per GT	212,352	211,663
Heat Rate (LHV)	Btu/kW-hr	9,066.1	9,179.8
Exhaust Flow	lb/hr	4,091,715	4,091,700.6
Exhaust Temperature	F	1147.1	1162.7
Fuel Temperature	F	80	80
Exhaust Composition			
Ar	mol%	0.0088	.00900
N_2	mol%	0.7410	0.7550
O_2	mol%	0.1211	0.0713
CO_2	mol%	0.0399	0.0672
H_2O	mol%	0.0891	0.0976
HRSG Flue Gas to CCS			
Flue Gas Flow (per HRSG)	lb/hr	4,091,715	2,455,020.4
Flue Gas Pressure	psia	14.7	14.7
Flue Gas Temperature	F	224.4	223.3
NGCC Steam to CCS			
Temperature after Attemperation	F	330.3	330.3
Pressure at ST LP Crossover Outlet	psia	72.5	72.5
Flow Summary after Attemperation			
Contribution from LP Sources	lb/hr	543,938	424,527
Contribution from ST HP Throttle	lb/hr	137,567	192,337
Total Flow to CCS	lb/hr	681,505	616,864
EGR			
Temperature at EGR Outlet / Near GT Inlet	F	---	77
Flow Summary			
Flow at HRSG Outlet / EGR Inlet	lb/sec	---	454.6
Flow of H_2O Condensate from EGR DCC	lb/sec	---	19.2
Flow at EGR Outlet / Near GT Inlet	lb/sec	---	435.4
Conditions at GT Compressor Inlet			
Flow	lb/sec	---	1105.2
Temperature	F	---	66.1
RH	%	---	0.930
Composition			
Ar	mol%	---	0.0094
N_2	mol%	---	0.7857
O_2	mol%	---	0.1562
CO_2	mol%	---	0.0281
H_2O	mol%	---	0.0206
Plant Performance			
Without CCS Aux Loads			
Gross NGCC Output	kW	588,209	596,009
Net NGCC Output	kW	579,582	587,215
Gross NGCC Heat Rate (HHV)	Btu/kW-hr	7,253.0	7,224.3
CCS Aux Loads			
CO_2 Capture Process	Mwe	18.8	18.8
CO_2 Compression	Mwe	17.0	17.1
With CCS Aux Loads			
Net NGCC+CCS Output	kW	543,858	551,406
Net NGCC+CCS Heat Rate (HHV)	Btu/kW-hr	7,844.4	7,808.6
Weighted Average Annual			
Net NGG+CCS Output	kW	---	---
Net NGCC+CCS Heat Rate (HHV)	Btu/kW-hr	---	---

Table 10: Heat Balance for NGCC with Significant GT Upgrades and ST HP Throttle Extraction

NGCC with Maximum GT Upgrades

		25F	40F	59F	65F	95F
Gas Turbine						
Power Output	kW per GT	228,111	227,868	224,901	222,902	216,790
Heat Rate (LHV)	Btu/kW-hr	9,036.3	9,002.8	9,058.0	9,096.0	9,254.3
Exhaust Flow	lb/hr	4,103,589	4,098,904	4,107,343	4,100,314	4,100,540
Exhaust Temperature	F	1,189	1,192	1,196	1,197	1,203
Fuel Temperature	F	80.0	80.0	80.0	80.0	80.0
Exhaust Composition						
Ar	mol%	0.0091	0.0091	0.0090	0.0089	0.0088
N_2	mol%	0.7648	0.7619	0.7545	0.7516	0.7393
O_2	mol%	0.0662	0.0653	0.0651	0.0650	0.0639
CO_2	mol%	0.0712	0.0712	0.0703	0.0700	0.0688
H_2O	mol%	0.0887	0.0925	0.1011	0.1045	0.1191
HRSG Flue Gas to CCS						
Flue Gas Flow (per HRSG)	lb/hr	4,103,589	4,098,904	4,107,343	4,100,314	4,100,540
Flue Gas Pressure	psia	14.7	14.7	14.7	14.7	14.7
Flue Gas Temperature	F	203.3	201.4	199.3	200.4	204.4
NGCC Steam to CCS						
Temperature after Attemperation	F	330.3	330.3	330.3	330.3	330.3
Pressure at ST LP Crossover Outlet	psia	72.5	72.5	72.5	72.5	72.5
Flow Summary after Attemperation						
Contribution from LP Sources	lb/hr	523,918	524,248	502,709	494,652	465,893
Contribution from ST HP Throttle	lb/hr	128,000	128,000	145,000	150,000	172,000
Total Flow to CCS	lb/hr	651,918	652,248	647,709	644,652	637,893
EGR						
Temperature at EGR Outlet / Near GT Inlet	F	45.0	58.9	77.0	81.9	99.1
Flow Summary						
Flow at HRSG Outlet / EGR Inlet	lb/sec	456.0	455.4	456.4	455.6	455.6
Flow of H_2O Condensate from EGR DCC	lb/sec	22.5	21.8	20.3	19.7	16.4
Flow at EGR Outlet / Near GT Inlet	lb/sec	433.4	433.7	436.1	435.9	439.2
Conditions at GT Compressor Inlet						
Flow	lb/sec	1113.9	1103.9	1106.4	1104.6	1104.9
Temperature	F	38.6	47.4	65.1	70.2	88.5
RH	%	0.764	0.937	0.964	0.959	0.887
Composition						
Ar	mol%	0.0095	0.0095	0.0094	0.0093	0.0092
N_2	mol%	0.7981	0.7949	0.7867	0.7836	0.7702
O_2	mol%	0.1566	0.1553	0.1538	0.1533	0.1507
CO_2	mol%	0.0296	0.0299	0.0295	0.0293	0.0288
H_2O	mol%	0.0061	0.0105	0.0206	0.0244	0.0411
Plant Performance						
Without CCS Aux Loads						
Gross NGCC Output	kW	639,089	640,797	638,257	634,567	623,562
Net NGCC Output	kW	630,135	631,811	629,244	625,573	614,581
Gross NGCC Heat Rate (HHV)	Btu/kW-hr	7,147.3	7,094.3	7,072.9	7,080.5	7,129.8
CCS Aux Loads						
CO_2 Capture Process	Mwe	18.790	18.775	18.803	18.780	18.780
CO_2 Compression	Mwe	17.911	17.919	17.809	17.734	17.570
With CCS Aux Loads						
Net NGCC+CCS Output	kW	593,433	595,117	592,633	589,059	578,231
Net NGCC+CCS Heat Rate (HHV)	Btu/kW-hr	7,697.2	7,638.9	7,617.4	7,627.4	7,688.7
Weighted Average Annual						
Net NGG+CCS Output	kW	585,225				
Net NGCC+CCS Heat Rate (HHV)	Btu/kW-hr	7,656.3				

Table 11: Heat Balance for NGCC with Maximum GT Upgrades

Final NGCC+CCS Configuration

Most cases in this table are run with a ST HP throttle pressure of ~ 1850 psi. Values in the Final Design Case column are weighted average annual ambient adjusted to full ST HP throttle pressure of ~ 1950 psi.

		25F	40F	59F	65F	95F	76F
Gas Turbine							
Power Output	kW per GT	217,423	215,983	212,113	210,097	202,639	207,545
Heat Rate (LHV)	Btu/kW-hr	9,038.8	9,097.4	9,172.4	9,216.1	9,391.0	9,277.8
Exhaust Flow	lb/hr	4,091,706	4,091,701	4,091,690	4,087,895	4,064,562	4,078,087
Exhaust Temperature	F	1,145	1,158	1,163	1,164	1,170	1,166
Fuel Temperature	F	80	80	80	80	80	80
Exhaust Composition							
Ar	mol%	0.0091	0.0091	0.0090	0.0090	0.0088	0.0089
N_2	mol%	0.7657	0.7623	0.7549	0.7521	0.7398	0.7478
O_2	mol%	0.0719	0.0713	0.0711	0.0710	0.0700	0.0706
CO_2	mol%	0.0684	0.0682	0.0673	0.0670	0.0658	0.0666
H_2O	mol%	0.0849	0.0891	0.0977	0.1010	0.1156	0.1061
HRSG Flue Gas to CCS							
Flue Gas Flow (per HRSG)	lb/hr	2,455,024	2,455,021	2,455,014	2,452,737	2,438,737	2,446,852
Flue Gas Pressure	psia	14.7	14.7	14.7	14.7	14.7	14.7
Flue Gas Temperature	F	203.9	201.6	201.8	203.0	209.9	205.9
NGCC Steam to CCS							
Temperature after Attemperation	F	330.3	330.3	330.3	330.3	330.3	330.3
Pressure at ST LP Crossover Outlet	psia	72.5	72.5	72.5	72.5	72.5	72.5
Flow Summary after Attemperation							
Contribution from LP Sources	lb/hr	600,904	563,791	537,676	528,603	507,161	573,556
Contribution from ST HP Throttle	lb/hr	23,000	60,000	80,000	85,000	97,000	14,369
Total Flow to CCS	lb/hr	623,904	623,791	617,676	613,603	604,161	587,925
EGR							
Temperature at EGR Out / Near GT In	F	45.0	58.9	77.0	81.9	99.1	86.76
Flow Summary							
Flow at HRSG Outlet / EGR Inlet	lb/sec	454.6	454.6	454.6	454.2	451.6	453.1
Flow of H_2O Condensate from EGR DCC	lb/sec	21.4	20.8	19.2	18.6	15.2	17.4
Flow at EGR Outlet / Near GT Inlet	lb/sec	433.2	433.9	435.4	435.6	436.4	435.8
Conditions at GT Compressor Inlet							
Flow	lb/sec	1105.0	1105.0	1105.2	1104.3	1098.2	1101.7
Temperature	F	32.8	47.4	65.1	70.2	88.4	75.5
RH	%	0.944	0.937	0.964	0.959	0.887	0.925
Composition							
Ar	mol%	0.0095	0.0095	0.0094	0.0093	0.0092	0.0093
N_2	mol%	0.7975	0.7939	0.7858	0.7827	0.7693	0.7780
O_2	mol%	0.1584	0.1575	0.1561	0.1556	0.1530	0.1547
CO_2	mol%	0.0286	0.0286	0.0282	0.0280	0.0275	0.0279
H_2O	mol%	0.0060	0.0105	0.0206	0.0244	0.0411	0.0302
Plant Performance							
Without CCS Aux Loads							
Gross NGCC Output	kW	610,255	611,551	606,864	603,313	588,397	604,818
Net NGCC Output	kW	601,633	602,833	598,135	594,594	579,735	596,099
Gross NGCC Heat Rate (HHV)	Btu/kW-hr	7,136.3	7,119.9	7,104.4	7,112.0	7,166.9	7,052.6
CCS Aux Loads							
CO_2 Capture Process	Mwe	18.751	18.751	18.751	18.739	18.661	18.4
CO_2 Compression	Mwe	17.229	17.227	17.078	17.006	16.749	20.8
With CCS Aux Loads							
Net NGCC+CCS Output	kW	565,652	566,856	562,306	558,850	544,324	556,919
Net NGCC+CCS Heat Rate (HHV)	Btu/kW-hr	7,699.0	7,681.3	7,667.4	7,677.9	7,747.2	7,660.3
Weighted Average Annual							
Net NGG+CCS Output	kW			553,417			556,919
Net NGCC+CCS Heat Rate (HHV)	Btu/kW-hr			7,708.4			6,913.6

Table 12: Heat Balance for Final NGCC+CCS Configuration

To complement the select data provided for the final NGCC+CCS in Table 12, data for the streams shown in Figure 4 are provided in Appendix E (for cases in Table 12 with a ST HP throttle pressure of ~ 1850 psi) and in Tables 13 to 17 (for final design case in last column of Table 12 with full ST HP throttle pressure of ~ 1950 psi).

The following four paragraphs provide a detailed description of each stream shown in Figure 4:

In the GT Inlet duct, ambient air (**stream 1**) and EGR (**stream 9**) are mixed in a 60/40 ratio and drawn into the GT axial compressor (**stream 2**). The mixture is compressed and then enters the GT combustor section where it is mixed with fuel (**stream 3**) and ignited creating an exothermic reaction. The high pressure, high temperature combustion products are expanded in the turbine section to create work and power the compressor.

The high temperature exhaust gas from the GT enters the HRSG where steam is generated via heat transfer from the exhaust gas to banks of water-filled tubes. The lower temperature exhaust gas exits the HRSG and enters the stack (**stream 5**). For unabated operation, the exhaust gas flows through the stack and is discharged to the atmosphere (**stream 6**). For abated operation, the exhaust gas exits the stack and flows through a duct (**stream 7**) which is split into two streams, with 60% of the flow going to CCS (**stream 13**) and 40% of the flow going to EGR (**stream 8**). The EGR stream flows through a Direct Contact Cooler (DCC) where it is cooled via a closed loop cooling circuit. Cooling water is supplied to the closed loop cooling circuit (**stream 10**), where it picks up heat, and is returned to the cooling tower (**stream 11**) where the heat is rejected to the atmosphere. The cooled EGR stream (**stream 9**) flows to the EGR mixer duct in the GT inlet. Condensate from the EGR DCC (**stream 12**) is pumped to the cooling tower basin.

The exhaust gas from the HRSG (**stream 13**) first enters the CCS DCC. Utilizing a closed loop cooling circuit, the DCC reduces the temperature of the gas to the optimal temperature for the CO_2 absorption process. Cooling water is supplied to the closed loop cooling circuit, where it picks up heat, and is returned to the cooling tower where the heat is rejected to the atmosphere. Condensate from the DCC (**stream 17**) is pumped to the cooling tower basin. From the DCC, the exhaust gas enters a CCS Fan (**stream 14**) which increases the pressure and then flows to the bottom of the absorber (**stream 18**). As the exhaust gas rises in the absorber, the CO_2 lean liquid solvent is rained from the top of the tower, capturing CO_2 from the gas. After a water wash in the upper portion of the tower to reduce amine loss, the exhaust gas leaves the top of the absorption tower (**stream 20**) and is released to the atmosphere. From the bottom of the absorption tower, the now CO_2 rich liquid amine is pumped to the top of the regenerator column. In the reboiler located near the bottom of the regenerator column, steam extracted from the steam cycle is used to produce water vapor that is sent to the bottom of the column. As the rising water vapor contacts the falling rich liquid, the amine solution releases the CO_2. The process continues with the now CO_2 lean amine solution being again pumped to the top of the absorption tower. The CO_2 leaves the top of the regenerator column and is routed to the CO_2 compressor (**stream 26**). After compression, cooling and dehydration, the CO_2 product (**stream 27**) is transported via pipeline to a well for sequestration. Cooling water is supplied to the process coolers (**stream 23**) and CO_2 compressor intercoolers (**stream 28**), where it picks up heat, and is returned (**stream 24** and **stream 29**) to the cooling tower where the heat is rejected to the atmosphere. Condensate from the CO_2 capture process and CO_2 dryers is pumped to the cooling tower basin (**stream 25** and **stream 30**).

The HRSG has three steam pressure levels, high pressure (HP), intermediate pressure (IP), and low pressure (LP), and a reheater section. High pressure steam is supplied to the HP section of the steam turbine (**stream 34**) and the HP exhaust (**stream 35**) is returned to the HRSG as cold reheat (CRH) steam to be "reheated" in the reheater section. After going through the reheater section, the hot reheat (HRH) steam is mixed with intermediate pressure steam and supplied to the IP section of the steam turbine (**stream 36**). The IP exhaust (**stream 37**) flows through a crossover pipe to the double flow LP section of the steam turbine. A steam extraction branch (**stream 38**) in the crossover pipe is mixed with LP superheater steam (**stream 39**) from the HRSG to supply the steam required by the CCS reboiler (**stream 21**). A valve in the crossover pipe is throttled to maintain upstream pressure at the level required by the CCS reboiler. LP exhaust from the steam turbine flows to the condenser (**stream 41**) where it is cooled and condensed and then returned to the HRSG as boiler feedwater (**stream 44**). Condensate from the CCS reboiler is returned to the condenser (**stream 22**). Cooling water is supplied to the condenser (**stream 42**), where it picks up heat, and is returned to the cooling tower (**stream 43**) where the heat is rejected to the atmosphere.

Figure 5 is a Sankey diagram which is a heat map for the final configuration at average ambient conditions (case in last column of Table 12).

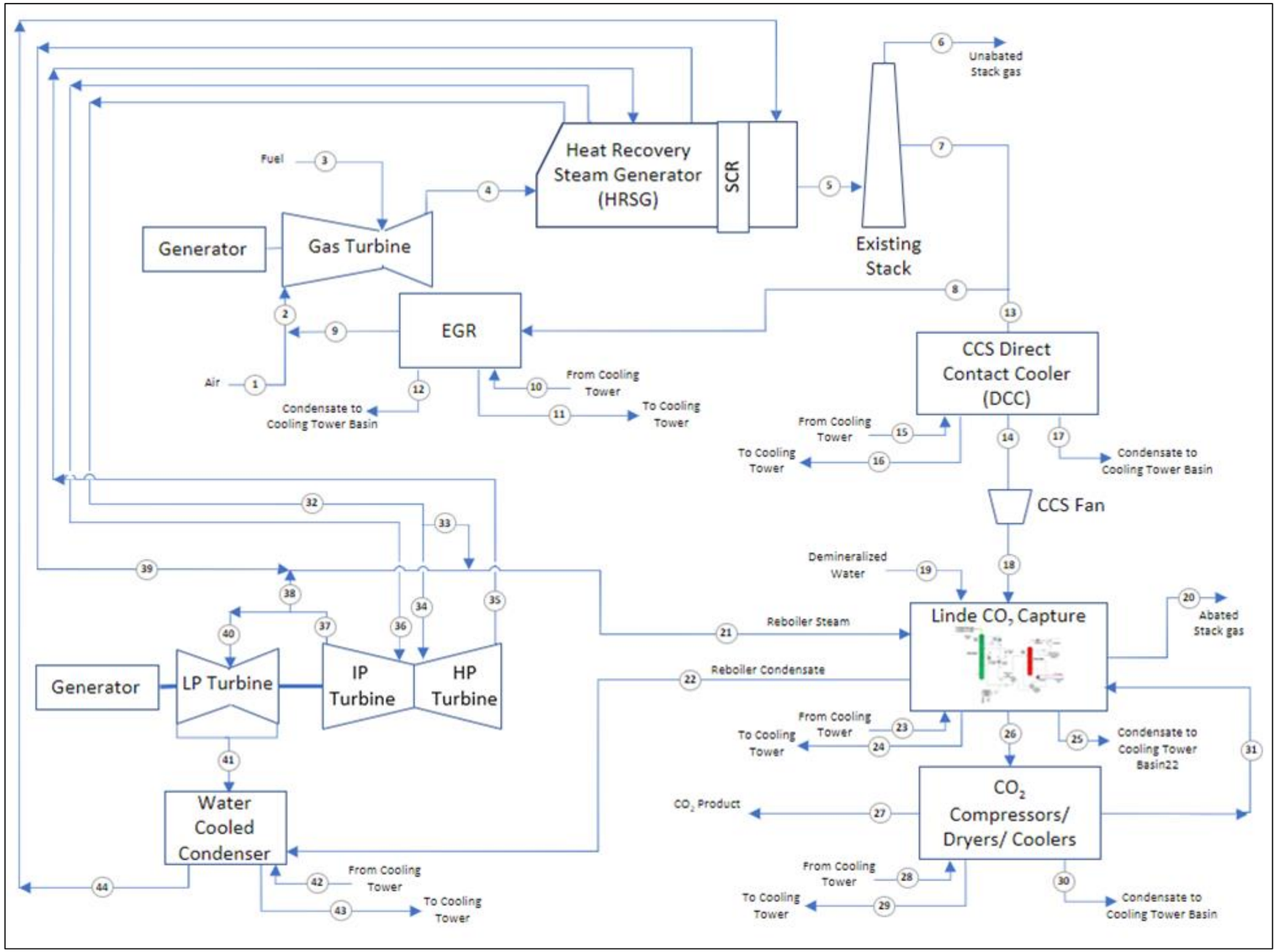

Figure 4: Barry Unit 6 NGCC+CCCS Heat Balance Diagram

Block Diagram Point		1	2	3	4	5	6	7	8	9
Source of Info										
Description		GT Fresh Air Inlet	GT Inlet after EGR	GT fuel	GT Exhaust Gas	HRSG Exhaust Gas	HRSG Stack Outlet	Flue Gas to EGR/CCS	EGR inlet flow	EGR outlet flow
Fluid		Air	Air/POC	Fuel	Flue Gas	Flue Gas	Flue Gas	Flue Gas	Flue Gas	Flue Gas
Gas/Vapor		gas	gas	gas	gas	gas	gas	gas	gas	gas
Volume Mole Fraction										
Nitrogen	%mol	0.7808	0.778	0.0028	0.7478	0.7478		0.7478	0.7478	0.7960
CO2	%mol	0.0004	0.0279	0.008	0.0666	0.0666		0.0666	0.0666	0.0709
Oxygen	%mol	0.2095	0.1547		0.0706	0.0706		0.0706	0.0706	0.0752
Water	%mol		0.0302		0.1061	0.1061		0.1061	0.1061	0.0485
Argon	%mol	0.0093	0.0093		0.0089	0.0089		0.0089	0.0089	0.0095
Methane	%mol			0.9569						
Ethane	%mol			0.0214						
Propane	%mol			0.0062						
Iso-butane	%mol			0.0029						
n-Butane	%mol									
Oiso-Butane	%mol									
Iso-pentane	%mol			0.0007						
n-Pentane	%mol									
Hexanes Plus	%mol			0.0011						
Molecular Weight	lb/mol	28.97	28.89	17.0099	28.403	28.403		28.403	28.403	29.073
Flowrate (2 GTs)	lb/hr	4,794,480	7,932,240	223,934	8,156,174	8,167,794	0	8,167,794	3,262,320	3,137,760
Pressure	psia	14.7	14.7	440	15.2	14.7	14.7	14.7	14.7	14.7
Temperature	F	76.05	75.5	80	1166	205.9		205.9	205.9	86.8

Table 13: Heat Balance Data for Final Design Case Streams 1 – 9

Block Diagram Point		10	11	12	13	14	15	16	17	18
Source of Info										
Description		EGR CW Inlet	EGR CW Outlet	EGR Condensate	Flue Gas to CCS	CCS DCC Outlet	DCC CW Inlet	DCC CW Outlet	DCC Condensate Outlet	CCS Fan Outlet
Fluid		water	water	water	Flue Gas	Flue Gas	water	water	water	Flue Gas
Gas/Vapor		liquid	liquid	liquid	gas	gas	liquid	liquid	liquid	Gas
Volume Mole Fraction										
Nitrogen	%mol				0.7478	0.7791				0.7791
CO2	%mol				0.0666	0.0694				0.0694
Oxygen	%mol				0.0706	0.0736				0.0736
Water	%mol	1	1	1	0.1061	0.0686	1	1	1	0.0686
Argon	%mol				0.0089	0.0093				0.0093
Methane	%mol									
Ethane	%mol									
Propane	%mol									
Iso-butane	%mol									
n-Butane	%mol									
Oiso-Butane	%mol									
Iso-pentane	%mol									
n-Pentane	%mol									
Hexanes Plus	%mol									
Molecular Weight	lb/mol	18.015	18.015	18.015	28.403	28.839	18.015	18.015	18.015	28.839
Flowrate (2 GTs)	lb/hr	9,798,140	9,798,140	125,280	4,905,474	4,780,288	15,116,112	15,116,112	125,186	4,780,288
Pressure	psia	67.75	67.75	65.99	14.34	14.05	67.75	67.75	65.99	15.56
Temperature	F	86	108.6	108.6	203	100.58	86	102.2	95.77	121.22

Table 14: Heat Balance Data for Final Design Case Streams 10 – 18

Block Diagram Point		19	20	21	22	23	24	25	26	27
Source of Info										
Description		Demin Water to Absorber Water Wash	CCS Flue Gas Outlet Flue Gas	Steam to CCS Reboiler steam	CCS Reboiler Condensate water	CO_2 Capture CW Inlet water	CO_2 Capture CW Outlet water	CO_2 Capture Condensate water	Wet CO_2 after Capture CO_2	Dry CO_2 after Compressors CO_2
Fluid		water	Flue Gas	steam	water	water	water	water	CO_2	CO_2
Gas/Vapor		liquid	gas	vapor	liquid	liquid	liquid	liquid	gas	liquid
Volume Mole Fraction										
Nitrogen	%mol		0.7977							
CO2	%mol		0.0023						0.9674	0.999999696
Oxygen	%mol		0.0659							
Water	%mol	1	0.1495	1	1	1	1	1	0.0326	3.03679E-07
Argon	%mol		0.0067							
Methane	%mol									
Ethane	%mol									
Propane	%mol									
Iso-butane	%mol									
n-Butane	%mol									
Oiso-Butane	%mol									
Iso-pentane	%mol									
n-Pentane	%mol									
Hexanes Plus	%mol									
Molecular Weight	lb/mol	18.015	27.51	18.015	18.015	18.015	18.015	18.015	43.164	44.00999
Flowrate (2 GTs)	lb/hr	37,786	4,336,276	587,925	587,925	34,802,398	34,802,398	0	489,432	482,674
Pressure	psia	95	14.7	72.52	116	67.75	67.75	34.81	31.91	2214.7
Temperature	F	65	108.1	330.32	276.1	86	101.17	104.4	103.9	115

Table 15: Heat Balance Data for Final Design Case Streams 19 – 27

Block Diagram Point		28	29	30	31	32	33	34	35	36
Source of Info										
Description		CO_2 Compressor CW Inlet	CO_2 Compressor CW Outlet	CO_2 Compressor Condensate	CO_2 Capture Recirc	HRSG HP Steam Outlet	HP Steam to CCS Reboiler	HP Steam to HP Turbine	HP Turbine Exhaust	Hot Reheat to IP Turbine
Fluid		water	water	water	CO2	steam	steam	steam	steam	steam
Gas/Vapor		liquid	liquid	liquid	gas	vapor	vapor	vapor	vapor	vapor
Volume Mole Fraction										
Nitrogen	%mol									
CO2	%mol				0.9967					
Oxygen	%mol									
Water	%mol	1	1	1	0.0033	1	1	1	1	1
Argon	%mol									
Methane	%mol									
Ethane	%mol									
Propane	%mol									
Iso-butane	%mol									
n-Butane	%mol									
Oiso-Butane	%mol									
Iso-pentane	%mol									
n-Pentane	%mol									
Hexanes Plus	%mol									
Molecular Weight	lb/mol	18.015	18.015	18.015	43.924	18.015	18.015	18.015	18.015	18.015
Flowrate (2 GTs)	lb/hr	7,585,292	7,585,292	6,650	108	1,122,000	33,629	1,088,371	1,059,225	1,172,703
Pressure	psia	67.75	67.75	60	14.7	1950	72.5	1950	495.8	463.5
Temperature	F	86	102.26	107.13	105.88	1023.1	330.3	1023.1	666.1	1048.7

Table 16: Heat Balance Data for Final Design Case Streams 28 – 36

Block Diagram Point		37	38	39	40	41	42	43	44
Source of Info									
Description		IP Turbine Exhaust	Extraction to CCS Reboiler	HRSG LP Steam Outlet	LP ST inlet	Condenser Steam Inlet	Steam Condenser CW Inlet	Steam Condenser CW Outlet	Condenser Condensate Outlet
Fluid		steam	steam	steam	steam	steam	water	water	water
Gas/Vapor		vapor	vapor	vapor	vapor	vapor	liquid	liquid	liquid
Volume Mole Fraction									
Nitrogen	%mol								
CO2	%mol								
Oxygen	%mol								
Water	%mol	1	1	1	1	1	1	1	1
Argon	%mol								
Methane	%mol								
Ethane	%mol								
Propane	%mol								
Iso-butane	%mol								
n-Butane	%mol								
Oiso-Butane	%mol								
Iso-pentane	%mol								
n-Pentane	%mol								
Hexanes Plus	%mol								
Molecular Weight	lb/mol	18.015	18.015	18.015	18.015	18.015	18.015	18.015	18.015
Flowrate (2 GTs)	lb/hr	1,194,360	370,631	130,698	813,064	814,268	59,839,000	59,839,000	1,402,193
Pressure	psia	72.52	72.52	72.52	47.31	0.72			0.72
Temperature	F	585.5	585.7	498.4	582.0	89.9	79	92.6	89.9

Table 17: Heat Balance Data for Final Design Case Streams 37 - 44

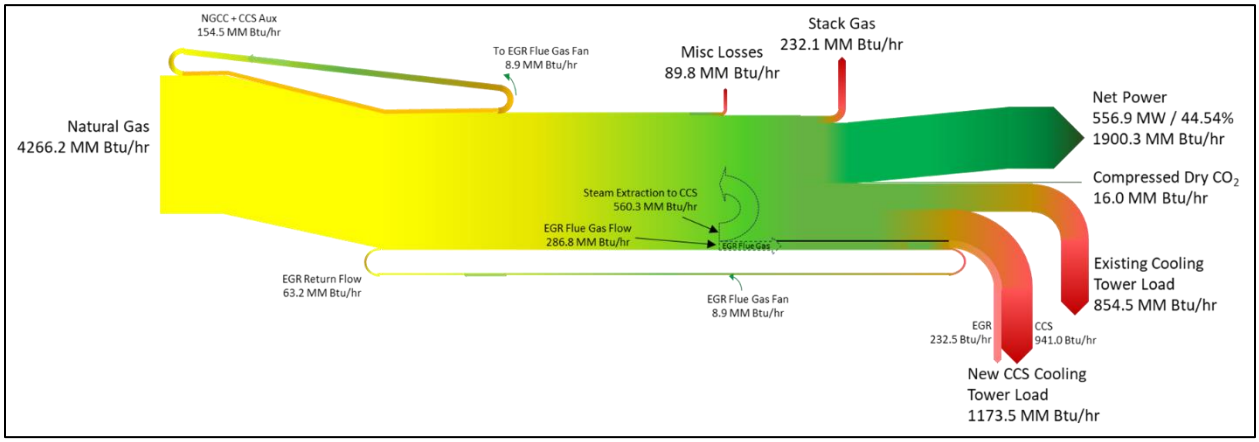

Figure 5: Sankey Diagram for Final Design Case

2.1.17 Environmental / Permitting Requirements

This section provides areas of concern and requirements related to environmental / permitting for CCS at Barry Unit 6.

- **Prevention of Significant Deterioration (PSD) Review**

  This major air permit review is triggered if a major modification increases emissions over Significant Emissions Rate (SER).

  Barry Unit 6 Implications:

- Barry Unit 6 is permitted and operates with more than 30% margin to the PSD trigger for NOx on a tonnes/yr basis and is not considered a high risk for any CCS or related GT uprate.
- PM_{10} and $PM_{2.5}$ air modeling to demonstrate NAAQS compliance would be required and post project periodic particulate matter testing would be an expected permit condition.
- EPA released new lower national ambient air quality standards (NAAQS) for primary annual $PM_{2.5}$ in February 2024 (standard lowered from 12 µg/m^3 to 9 µg/m^3). PM modeling was challenging during recent permitting efforts for the two new combined cycle units at Barry (8 and 9). This new NAAQS will make permitting even more challenging.
- As the NAAQS has been lowered, Mobile could be at risk of being classified as a non-attainment area which would require obtaining emissions offsets in the Mobile area for the project. Nonattainment areas (NAA) would require Alabama Department of Environmental Management (ADEM) to develop a plan to come back into compliance and set up offset banking which could take some time.

- **New Source Performance Standards (NSPS) Quad K** (Limits: NOx -15 ppm, SO2 -burn natural gas)

  This NOx and SO_2 standard is triggered if GT upgrades > 4% of original cost.

  Barry Unit 6 Implications:

  - Site expects this to be triggered with combustor upgrade for EGR regardless of other GT upgrades. Need the cost of installed DLN2.6+ combustor upgrade installed to confirm.
  - Requires additional monitoring and reporting compared to today
  - If the site must go through BACT (projected NOx emissions greater than SER), the new NOx limit may be lower than current NOx limit, resulting in higher ammonia requirement for SCR.

- **National Emission Standards for Hazardous Air Pollutants (NESHAP) Quad Y** (Limits: 91 ppb of formaldehyde)

  This formaldehyde standard is triggered if GT upgrades > 50% cost compared to new unit.

  Barry Unit 6 Implications:

  - Was not in place when Barry 6 was built
  - Would require an oxidation catalyst
  - Current HRSG does not have room to add an oxidation catalyst. Operator would need to investigate a dual function catalyst (Cormetech is an example of a company providing this product)

- **Quad T** (Limits: 1,000 lb/MWh; new rule expected)

  This greenhouse gases standard is triggered if GT upgrade is at or above 50% cost compared to new unit.

  Barry Unit 6 Implications:

- Not previously subjected to this due to 2000 build
- New monitoring and reporting requirements for the plant

2.1.18 Applicable Codes and Standards

Lists of applicable codes and standards are available in the following locations:

- Appendix C – Basis of Design for CCS
- Appendix K – General Electrical Design Specification
- Appendix AA – Mechanical Design Criteria
- Appendix BB – Electrical Design Criteria
- Appendix DD – Structural Design Criteria
- Section 2.3.16 – ISBL Process, Plant, and Environmental Safety

2.2 Task 2.2 - FEED Study Conceptual Design

Four primary systems were studied in Task 2.2 FEED Study Conceptual Design:

- GT exhaust gas recirculation go/no-go
- GT upgrades to recover plant MW output
- Steam supply sources from current NGCC plant for CCS demand
- Cooling water integration options with current NGCC plant

The Techno-Economic Analysis (TEA), Appendix A, includes an assessment of installed CapEx, as well as net plant MW and heat rate impacts, translating to equivalent NPV/CapEx cost using $/kW and $/(Btu/kW-hr) values. After review with Southern Company, the $/kW values were reduced significantly to match their current outlook on the value of generation capacity (i.e, MWs).

2.2.1 GT Exhaust Gas Recirculation (EGR) Go/No-Go

As a part of this FEED study, GEGP performed an EGR viability assessment that ended with a go/no-go decision. The go/no-go decision was based on: (1) red-flag risks identified by engineering (2) CapEx savings (3) adequate real estate on the plant for EGR equipment and (4) buy-in from the site owner on the viability of EGR. **In summary, the EGR system is a "go" and is included in the final NGCC+CCS configuration.** The results of the viability assessment are presented in a detailed report available in Appendix F.

Table 18 summarizes performance and cost with and without EGR. Note the following while reviewing this table:

- Values are provided in 2018 $MM USD; Values outside of brackets are from the EGR viability assessment (Appendix F) and values inside brackets are from the final design and costing process available in the TEA (Appendix A page 50)
- Performance values are at ISO conditions
- EGR is 40% at full load (see Section 2.1.12)
- CCS cost reduction of $106MM is comprised of a CCS ISBL engineered equipment reduction of $30MM plus a CCS ISBL installation / OSBL installed equipment reduction of $76MM

	Without EGR	With EGR	Delta
EGR Impact to Performance			
Net NGCC+CCS Output, MW	543.86	551.41	+7.6
Net NGCC+CCS Heat Rate, HHV Btu/kW-hr	7,844.4	7,808.6	-35.8
Net NGCC+CCS Efficiency, Pct Pts	43.5	43.7	+0.2
NPV of EGR System	---	~ 12	---
EGR Impact to CapEx			
EGR Cost	---	62.1 [73.6]	+62.1 [+73.6]
CCS Cost	---	---	-106
Total Plant Cost (TPC)	937.1	893.2 [904.7]	-43.9 [-32.4]

Table 18: Summary of Performance and Cost with and without EGR

The EGR viability assessment resulted in a Net Present Value (NPV) of ~$12MM plus a net CapEx savings of ~$43.9MM, bringing the total to $55.9MM. The combined impact of EGR to the levelized cost of electricity (LCOE) is approximately -$1.31/MW-hr and break-even CO_2 sales price is approximately -$1.96/tonne of CO_2 captured, which represents a reduction of nearly 1.6% on LCOE and 2.7% on break-even CO_2 sales price.

As shown in Table 18, after the final design and costing process, GEGP's EGR cost increased to $73.6MM. Even with the $11.5MM increase, EGR delivers a net savings in TPC of over $32MM, along with an improved net NGCC+CCS output and heat rate due to reduced CCS steam consumption.

Final design details for the EGR system are available in Section 2.5.1.

2.2.2 GT Upgrades to Recover Plant MW Output

As a part of this FEED study, GT upgrade options were investigated as an integration concept to recover MW consumed by the carbon capture process. These upgrades are in addition to the DLN 2.6+ upgrade which is required for EGR. After analysis of minimal, significant, and maximum GT upgrade options (see Section 2.1.16), **the selected GT upgrade for final design is the significant 7F.05 Compressor upgrade with AGP Tech.** The GT down-select results are presented in a detailed report available in Appendix G.

Minimal GT Upgrade

The minimal GT upgrade resulted in significant performance loss (MW) compared to the current NGCC leading to a large drop in overall customer value versus the cost of upgrade.

Significant GT Upgrade

The selected GT configuration drives the highest net value of +$30.8MM relative to base (with no GT upgrade at all). While a combined CapEx (GT, ST, BOP, CCS) of $155.8MM is required, the result is increased performance (+76.6MW/-50 Btu/kW-hr) worth $51.3MM and an increased CO_2 capture stream (+0.22 MM tones/yr) worth $14.1MM/yr ($85 45Q/85% CF).

Current levels of CO and NOx emissions, in terms of ppm, can be maintained with this significant GT upgrade.

Maximum GT Upgrade

While the maximum GT upgrade configuration resulted in higher net plant output, it was not selected for 3 primary reasons:

1) Southern Company placed only moderate $/MW value on the additional output, driving down the incremental NPV.
2) The site was not originally required to install emissions control equipment such as SCR and/or CO catalyst. The maximum upgrade will certainly trigger a new source review including evaluation of new emissions control equipment.
3) The anticipated outage schedule for a flange-to-flange replacement is expected to be longer than the other options. This extended outage was viewed as very risky by the site owner.

Final design details for the GT upgrade are available in Section 2.5.4.

2.2.3 Steam Supply Sources from current NGCC Plant for CCS demand

A significant amount of steam (almost 50% of the total generated in the Barry Unit 6 HRSGs) is required in the CCS reboiler to release high purity carbon dioxide from the capture solvent. As a part of this FEED study, steam source options for the CCS reboiler were investigated.

The most basic inclusion of carbon capture at an NGCC employs a "bolt-on" configuration where the NGCC and CCS are not integrated and steam for CCS is produced in an auxiliary boiler. Use of an auxiliary boiler to provide steam to the CCS has a massive negative impact on CapEx (having to build both the aux boiler and a larger CCS to also capture the aux boiler exhaust) and OpEx (additional fuel must be burned in the aux boiler to produce the CCS reboiler steam). Previous studies have shown that the use of an aux boiler can negatively impact NPV by over 20%.

At an integrated NGCC+CCS facility, the ideal NGCC steam source has conditions that resemble those required for the CCS reboiler. Typically, steam sources in order of preference are: (1) Low Pressure Superheat (LPSH), (2) IP/LP Crossover, (3) Cold Reheat (CRH), (4) Hot Reheat (HRH), and (5) High Pressure Superheat (HPSH), as shown in Figure 6.

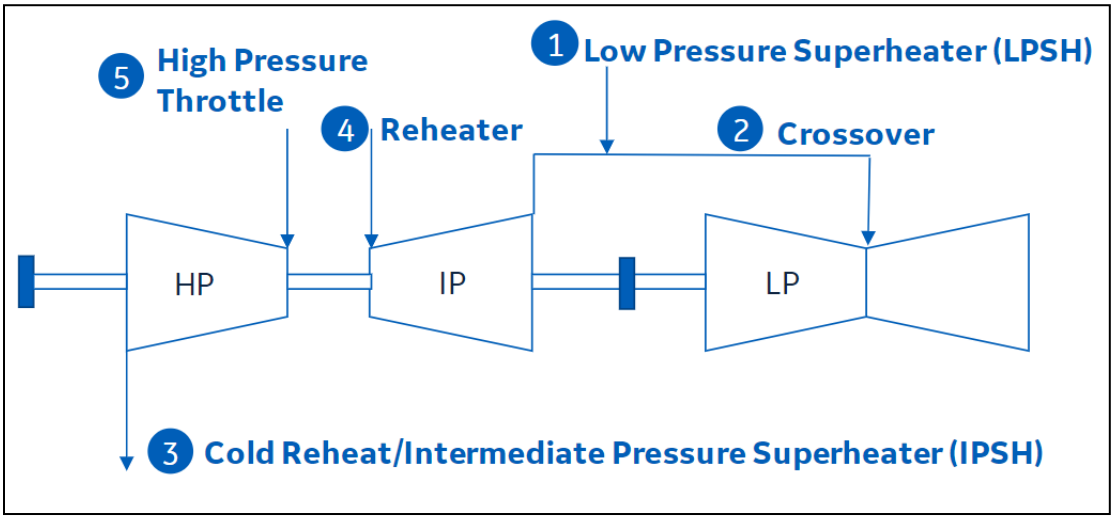

Figure 6: Typical NGCC Steam Extraction Locations for CCS

After significant analysis, GEGP determined that the **CCS reboiler at Barry Unit 6 should receive steam from three NGCC sources (in the following order): ST HP throttle, HRSG LPSH outlet, and ST LP crossover.** The steam source down-select results are presented in a detailed report available in Appendix G.

The three steam sources were selected for the following reasons:

- **ST HP Throttle** - As mentioned in Section 2.1.16, several GT upgrade options were investigated. All of the upgrade options require ST modification due to limits on the ability of the steam turbine to accommodate additional steam flow. Even with modifications, a small amount (~5-15%) of HP steam needs to be diverted from the steam turbine at high GT loads. This HP steam will be conditioned, combined with low pressure steam, and sent to the CCS.
- The preferred steam source from the NGCC closely matches the conditions required at the reboiler inlet because this steam requires less conditioning and typically provides better plant efficiency than other steam sources. Using this guideline, GEGP will use two low pressure NGCC steam sources to supply most of the steam required in the CCS reboiler.
    - **HRSG LPSH Outlet** - The HRSG LPSH outlet can supply approximately 20% of the required flow to the CCS.
    - **ST LP Crossover** - The remaining steam flow will come from the ST LP crossover. The use of a new crossover butterfly valve to facilitate steam extraction from the ST LP crossover allows the best efficiency and the lowest cost of supplying reliable steam to the CCS, thereby allowing stable operation of both the NGCC and CCS.

Additional information on the selection process plus final design details for supply of steam to the CCS reboiler are available in Sections 2.5.2 and 2.5.5.

2.2.4 Cooling Water Integration Options with current NGCC Plant

The existing NGCC plant CCW system is configured with a 10-cell cooling tower, plate and frame heat exchangers, and CCW pumps as shown in Figure 7. The existing cooling tower open cooling flow is ~125,000 gpm. The existing NGCC plant heat load is ~97% from the ST condenser, with the remaining 3% associated with the GT and ST generator hydrogen coolers, the ST and GT lube oil coolers, and the plant air compressors. With the combined increase in steam flow due to the GT upgrades, and the massive steam extraction to the CCS, the resulting steam flow to the steam condenser is reduced by nearly 30% from the original design. In theory, this could allow up to 30% of the existing 125,000 gpm of cooling water to be diverted to the CCS process. However, the CCS process (including the EGR loop) will require approximately 68,000 gpm of cooling water which is more than the “available” 30% mentioned earlier (37,500 gpm). A new cooling tower is required to provide at least 30,500 gpm of cooling water to supplement the amount of cooling water that could be diverted from the current NGCC cooling tower.



Figure 7: Existing Barry Unit 6 Plant Cooling Tower

While it is possible to divert up to 30% of the existing cooling water from the existing NGCC cycle to the new CCS heat load demands, the current plant operators have directed this FEED study to leave all NGCC CCW flow available to the NGCC cycle. The primary rationale was that in the event of a CCS upset, the CCW cooling water flow may be able to divert back to the NGCC fast enough to prevent the ST (and potentially the GT) from tripping and interrupting plant power generation.

As a result of this plant direction, the new CCS OSBL cooling tower will be sized for 100% of the EGR and CCS heat load (68,000 gpm of cooling water). If the existing CCW system could have been partially diverted, it would have required fast acting cooling water diversion valves and piping to and from the existing cooling tower but would have resulted in a reduction of ~55% in the CCS cooling tower.

The design cooling water temperature of the new EGR and CCS cooling tower is set at 86°F.

2.3 Task 2.3 - Inside Battery Limits Detailed Design

2.3.1 CCS Process Description

The CCS Process Description Issue 1 dated 09/12/2022 is available below. This document was produced by Linde and contains information such as flue gas pre-treating, CO2 absorption, regeneration, CO2 compression and drying, and off-site facilities.

Plant Description Post Combustion Capture Plant		
Linde Project No. 3710A46M	Client Project No. -	
Linde Project Code Bucks	Client Project Code -	
Linde Doc. No. &AE 1000 P-MP 1001 (EN)	Client Doc. No. -	Client Revision -

Process Description

IFU	1.0	09.12.2022	Y. Voloshchuk	T. Richter	D. Jarmus	
Status	Issue	Date	Prepared	Reviewed	Approved	Remarks

Linde Project No:	3710A46M	Linde Issue	Client Project No:	-	Client Rev.
Linde Doc No:	&AE 1000 P-MP 1001 (EN)	1.0	Client Doc No:	-	-

CONTENT

1	**Post Combustion Capture Plant (PCC)**	**3**
2	Flue Gas Pre-Treating	3
3	CO_2 Absorption	3
4	Regeneration	4
5	CO_2 Compression and Drying	4
6	Off-Site Facilities	4

Linde Project No:	3710A46M	Linde Issue	Client Project No:	-	Client Rev.
Linde Doc No:	&AE 1000 P-MP 1001 (EN)	1.0	Client Doc No:	-	-

1 Post Combustion Capture Plant (PCC)

See Block Flow Diagram &AE 1000 P-FD 1001 and Process Flow Diagram &AE 1100 P-FF 1001 - &AE 1300 P-FF 9002.

2 Flue Gas Pre-Treating

The Flue Gas enters the PCC Plant at nearly atmospheric pressure. The flue gas flow to the capture plant is pressure controlled by the Flue Gas Blower 10/20-C1040. Herewith, the Flue Gas Blower 10/20-C1040 provides necessary flue gas pressure for the downstream equipment. In the DCC (Direct Contact Cooler) Column 10/20-T1010 the flue gas is cooled by circulating process water. The process water is pumped by the DCC Circulation Pump 10/20-P1020 to the top of the DCC Column whereas the flue gas enters at the bottom of the column. Thus, water passes in a counter-current direction to the flue gas and removes the heat from the gas stream. Circulating process water is cooled in DCC Cooler 10/20-E1030 against cooling water.

Water condensed from the flue gas is routed to the battery limit via liquid level control in the sump of the DCC Column 10/20-T1010.

After leaving the DCC Column 10/20-T1010 the cooled flue gas is fed by the Flue Gas Blower 10/20-C1040 to the bottom of the Absorber Column 10/20-T2010.

3 CO_2 Absorption

In the Absorber Column 10/20-T2010, the flue gas passes in a counter-current flow to the liquid washing agents. The Absorber Column 10/20-T2010 consists of four different sections.

The lower two sections are designed for CO_2 absorption and are operated with the amine-based washing agent. In the CO_2 absorption part 95% of the CO_2 is captured from the flue gas. The upper two segments are designed for emission control. They are divided into a "dry" bed section (lower section) and a backwash section (upper section). Both upper sections are conceived to reduce impurities, e.g., amine traces in the gas stream.

Arriving at the entry of the Absorber Column 10/20-T2010 the flue gas passes upwards through the absorption beds where two packed bed sections are promoting the mass transfer of CO_2 from the gas into the absorbing amine wash liquid. The amine wash liquid flow rate is controlled based on the CO_2 flow rate measured upstream the Absorber Column 10/20-T2010.

A high-performance packing with low pressure drop and high mass transfer capacity is installed in the absorption sections, which leads to an optimized column diameter.

The two beds in the upper part of the Absorber Column 10/20-T2010 target the precipitation of absorbing solution carried over from the absorber beds. In the upper column beds, process water passes in a counter-current flow to the upstreaming gas. Emissions in the gas flow leaving the Absorber Column 10/20-T2010 are effectively controlled and reduced due to implementation of both bed sections.

The emission control system consists of a "dry" bed and a backwash section. The patented "dry" bed section operates only with the liquid overflow from the top packing section. At the top of the Absorber Column 10/20-T2010 a conventional backwash section is installed. Within the backwash section the wash water passes in a counter-current flow to the flue gas recapturing entrained droplets of amine solution. The wash water is circulated by the Absorber Wash Water Pump 10/20-P2040 from the first chimney tray through the water-cooled Absorber Wash Water Cooler 10/20-E2050. Demineralized water from battery limit is supplied to the wash water cycle to avoid the accumulation of amines in the water and to adjust the water balance of the plant.

CO_2-lean treated gas leaves the Absorber Column 10/20-T2010 at the top and is vented to the atmosphere.

The CO_2-enriched absorbent solution is withdrawn at the bottom of the Absorber Column 10/20-T2010 and is fed by the Rich Solution Pump 10/20-P2020 via the Rich/Lean Solution Heat Exchanger 10/20-E3030 to the Rich Solution Flash Vessel 10/20-D3040. The Rich Solution flow is controlled via control valve, using the CO2 flow (calculated from CO2 concentration and flue gas flow) of the flue gas as control variable. In the Rich/Lean Solution Heat Exchanger Rich Solution is heated by Lean Solution leaving the Stripper Interstage Heater 10/20-E3035.

Linde Project No:	3710A46M	Linde Issue	Client Project No:	-	Client Rev.
Linde Doc No:	&AE 1000 P-MP 1001 (EN)	1.0	Client Doc No:	-	-

4 Regeneration

A small vapor fraction consisting besides CO2 and water principally of dissolved gas components like Oxygen, Nitrogen etc. is separated in the Rich Solution Flash Vessel from the Rich Solution 10/20-D3040 flow and recycled back to one of the Absorber Column 10/20-T2010. The flash vessel pressure is regulated via pressure control valve located at the gas outlet of the flash vessel.

The Rich Solution Booster Pump 10/20-P3045 transfers the preheated Rich Solution from the Rich Solution Flash Vessel to the Stripper Column 10/20-T3010. The solution flow rate is regulated via liquid level control in the Flash Vessel.

Regeneration of the amine solution is carried out in the Stripper Column 10/20-T3010 by releasing the absorbed CO_2. The Stripper Column 10/20-T3010 consists of three packed bed sections. The two lower sections are designed as stripping segments, the top section is the wash section running with process condensate from the Stripper Reflux Drum 10/20-D3060.

The hot rich solution enters the Stripper Column 10/20-T3010 and passes in a counter-current flow to the ascending vapor, generated in the Stripper Reboiler 10/20-E3070. The necessary heat in the reboiler is provided by low-pressure steam available at battery limit. In the Stripper Reboiler 10/20-E3070 the saturated steam is condensed due to heat transfer to the amine solution. Steam condensate is sent back to the battery limit.

After leaving the Stripper Column 10/20-T3010 the wet CO_2 gas is cooled in the Stripper Condenser 10/20-E3050 against Cooling Water. Condensate and CO_2-enriched gas are separated in the Stripper Reflux Drum 10/20-D3060. Whereas the condensate is returned to the top of the Stripper Column 10/20-T3010 by the Stripper Reflux Pump 10/20-P3065. The raw CO_2 gas is fed to the CO_2 Compressor Unit 10/20-Y5010.

Regenerated Amine Solution leaves the Stripper Column 10/20-T3010 at the bottom and is pumped by the Lean Solution Pump 10/20-P3020 to Stripper Interstage Heater 10/20-E3035 where the lean Solution is cooled against the amine solution from the upper regeneration bed of the Stripper Column 10/20-T3010. The precooled lean amine solution is further cooled in the Rich/Lean Solution Heat Exchanger 10/20-E3030 by heat exchange with rich solution coming from the Absorber Column 10/20-T2010. It is further cooled in the Lean Solution Cooler 10/20-E2030 against cooling water before it finally enters the Absorber Column 10/20-T2010.

A portion of the Lean Solution is routed over the Mechanical Filter 10/20-S3074 and the Activated Carbon Filter 10/20-A2075, which are used to eliminate solid matters. Solid matters might be generated due to solution degradation, or they can be entrained with the feed gas stream.

The pressure of the Stripper Column 10/20-T3010 is regulated via suction pressure control by the CO_2 Compressor Unit 10/20-Y5010.

5 CO_2 Compression and Drying

The CO_2 raw gas from regeneration section of the PCC plant is routed to the CO_2 Compression and Drying section where it is compressed, cooled and dried.

The CO_2 compressor comprises 6 compression stages (preliminary number, TBD by vendor). After 4th stage of compression, the CO_2 gas is cooled in the CO_2 Chiller Unit 10/20-Y5040 against a refrigerant to condensate water in the gas stream. The generated condensate is separated in the Water Separator 10/20-D5050 and sent to the Condensate Knock Out Drum 10/20-D5030. The condensate formed due to compression and cooling is collected in the Condensate Knock Out Drum 10/20-D5030.

In the Condensate Knock Out Drum 10/20-D5030 the CO_2 dissolved in the condensate is separated and vented to the atmosphere. The condensate is routed to the battery limit by the Condensate Knock Out Drum Pump 10/20-P5035.

The compressed and chilled CO_2 gas is fed back to the CO_2 Compressor Unit 10/20-Y5010 to the 5th stage. It is further compressed to the required pressure and cooled against cooling water.

The product CO_2 gas is routed to the battery limit.

6 Off-Site Facilities

The whole solvent plant inventory is stored in the Solution Storage Tank 10/20-D7210. The solvent make-up volume for six months of continuous plant operation is stored in the Solution Make-Up Vessel 10/20-D7250. The amine

Linde Project No:	3710A46M	Linde Issue	Client Project No:	-	Client Rev.
Linde Doc No:	&AE 1000 P-MP 1001 (EN)	1.0	Client Doc No:	-	-

solution from the Solution Storage Tank 10/20-D7210 or Solution Make-Up Vessel 10/20-D7250 is fed to the PCC plant by the Solution Make-up Pump 10/20-P7220 via the Storage Mechanical Filter 10/20-S7230.

For the drainage of equipment and piping as well as in case of maintenance a slop system is installed composed of the Slop Vessel 10/20-D7260 and the Slop Vessel Pump 10/20-P7240. The latter can be used to transfer drained amine solution from the Slop Vessel 10/20-D7260 either into the Solution Storage Tank 10/20-D7210 or back to the PCC plant.

The Slop Vessel 10/20-D7260 is placed in the pit conceived to collect surface water from the plant surroundings. The pit pump 10/20-P7290 evacuates the collected surface water towards battery limit.

Both the Solution Storage Tank 10/20-D7210, Solution Make-Up Vessel 10/20-D7250, and the Slop Vessel 10/20-D7260 are equipped with individual electrical heaters (10/20-E7211, 10/20-E7251, and 10/20-E7261, respectively) to prevent crystallization of stored amine solution.

During operation of the PCC unit, the active amine absorbent will slightly degrade over time. The Reclaiming Unit 10/20-Y7610 is used to permanently remove degradation products as well as most acidic components from the solution. Thus, the slightly degraded amine solution will be reconditioned and can further be recycled into the Absorber Column 10/20-T2010. The wastewater generated in the Reclaiming Unit 10/20-Y7610 is sent to the battery limit.

To prevent and to counteract foaming in the wash unit an Anti-Foam Dosing Unit 10/20-Y7310 is implemented injecting the antifoam agent directly in the amine solution upstream of the Absorber Column 10/20-T2010 and Stripper Column 10/20-T3010.

The NaOH Storage Vessel 30-D7110 is used to store 50wt% NaOH solution for total plants (train 10 + train 20). NaOH solution is needed for the removal of flue gas contaminants such as SO_x in the Reclaiming Unit 10/20-Y7610. The flow to the reclaiming unit is controlled by the package unit itself. The NaOH Storage Vessel 30-D7110 is equipped with electrical heater 30-E7111.

The NaOH solution and amine solution are delivered to the plant by trucks. Both liquids are dispatched to their dedicated storage tanks via the Truck Unloading Stations 30-Y7920 and 30-Y7910, respectively.

2.3.2 CCS ISBL Heat and Material Balance

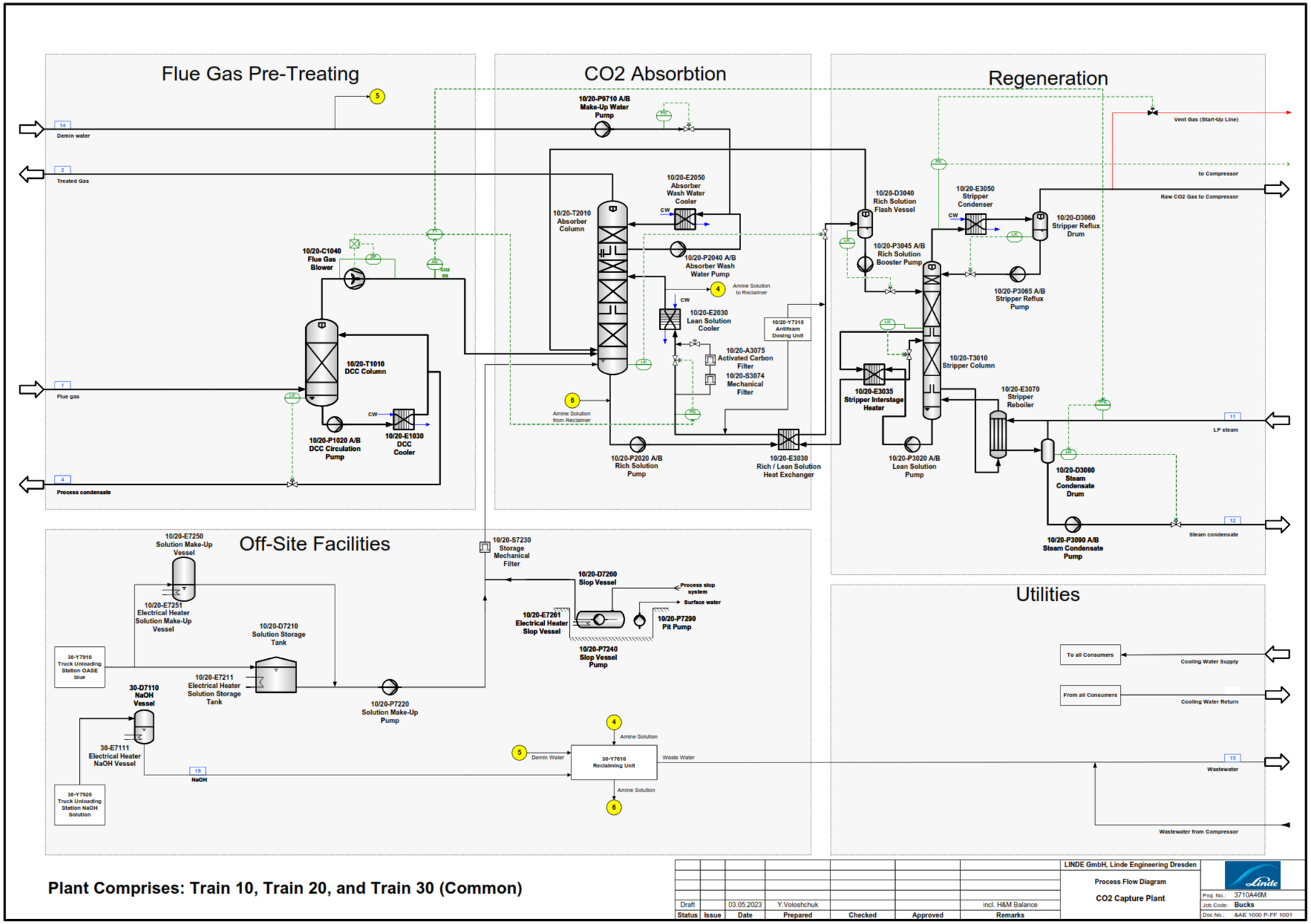

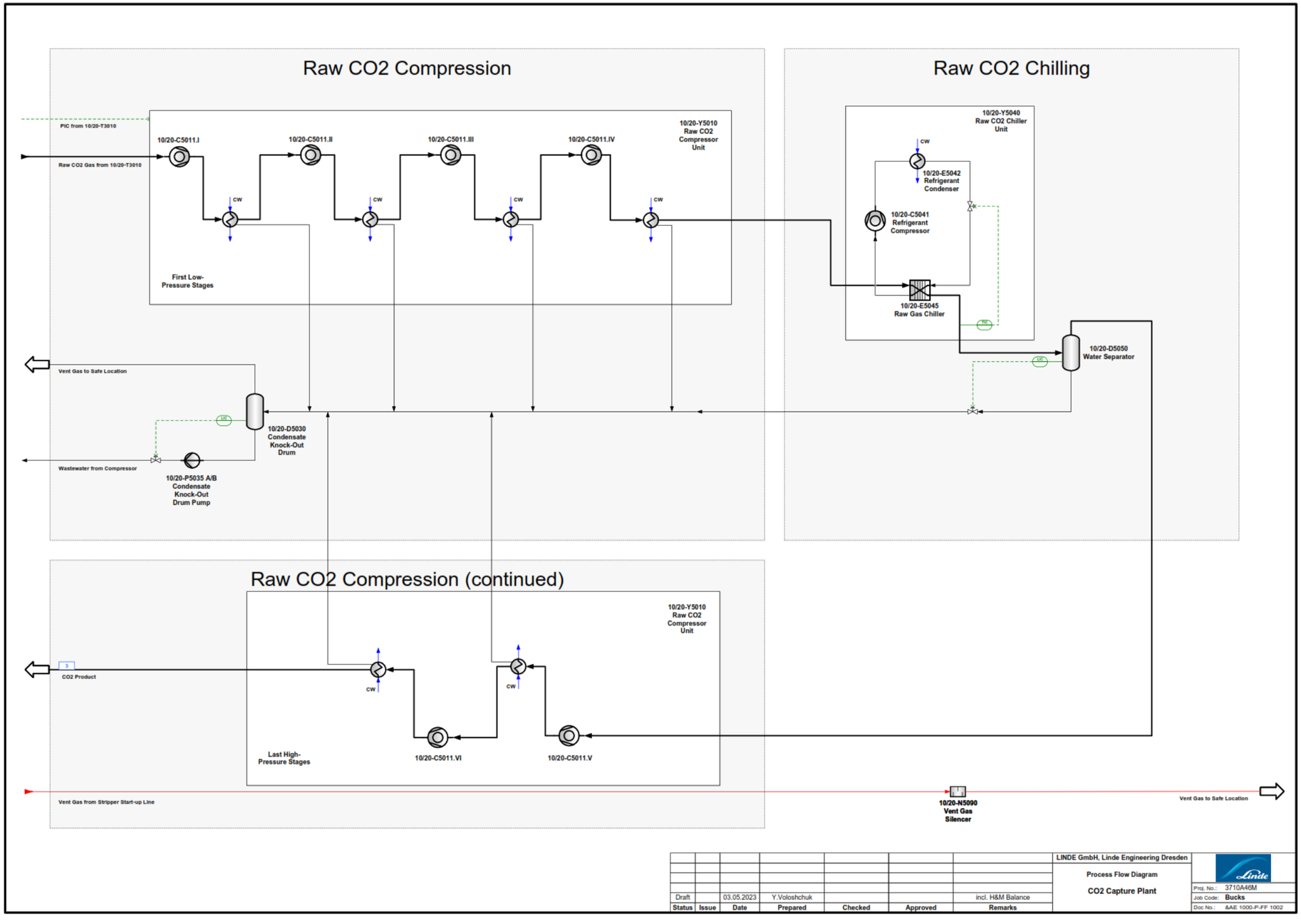
Raw CO2 Compression
Raw CO2 Chilling
PIC from 10/20-T3010
Raw CO2 Gas from 10/20-T3010
10/20-C5011.I
10/20-C5011.II
10/20-C5011.III
10/20-C5011.IV
10/20-Y5010
Raw CO2
Compressor
Unit
CW
First Low-
Pressure Stages
10/20-Y5040
Raw CO2 Chiller
Unit
10/20-E5042
Refrigerant
Condenser
10/20-C5041
Refrigerant
Compressor
10/20-E5045
Raw Gas Chiller
10/20-D5050
Water Separator
Vent Gas to Safe Location
10/20-D5030
Condensate
Knock-Out
Drum
Wastewater from Compressor
10/20-P5035 A/B
Condensate
Knock-Out
Drum Pump
Raw CO2 Compression (continued)
CO2 Product
Last High-
Pressure Stages
10/20-C5011.VI
10/20-C5011.V
Vent Gas from Stripper Start-up Line
10/20-N5090
Vent Gas
Silencer
Vent Gas to Safe Location
LINDE GmbH, Linde Engineering Dresden
Process Flow Diagram
CO2 Capture Plant
Draft
03.05.2023
Y.Voloshchuk
incl. H&M Balance
Status
Issue
Date
Prepared
Checked
Approved
Remarks
Proj. No.: 3710A46M
Job Code: Bucks
Doc No.: &AE 1000-P-FF 1002

This space intentionally left blank

2.3.3 CCS Block Flow Diagram

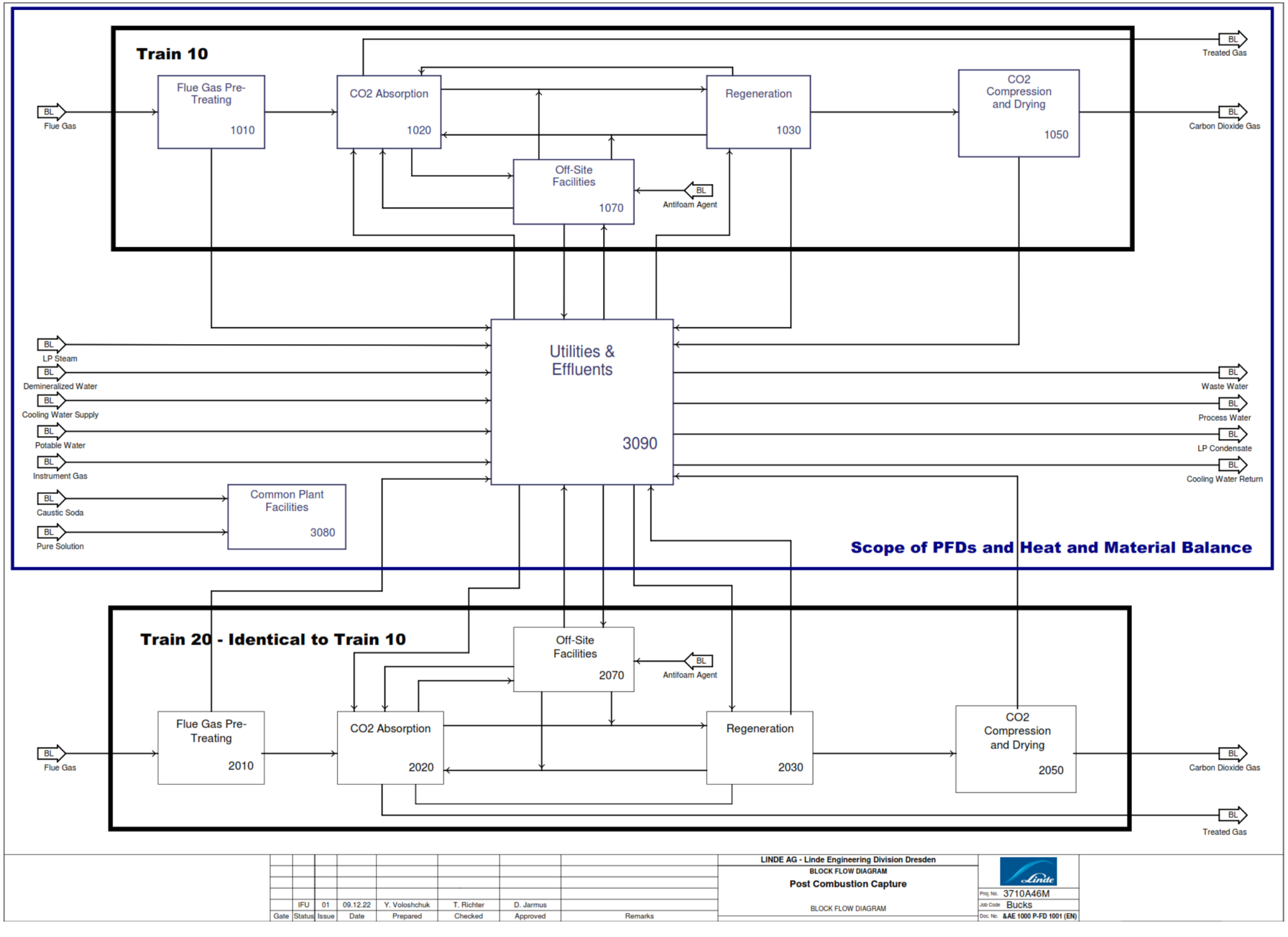

2.3.4 ISBL Piping and Instrumentation Diagrams (P&IDs)

The following documents are available in Appendix H:

- ISBL P&ID Symbols and Abbreviations I
- ISBL P&ID Symbols and Abbreviations II
- ISBL P&IDs

2.3.5 ISBL Plot Plan

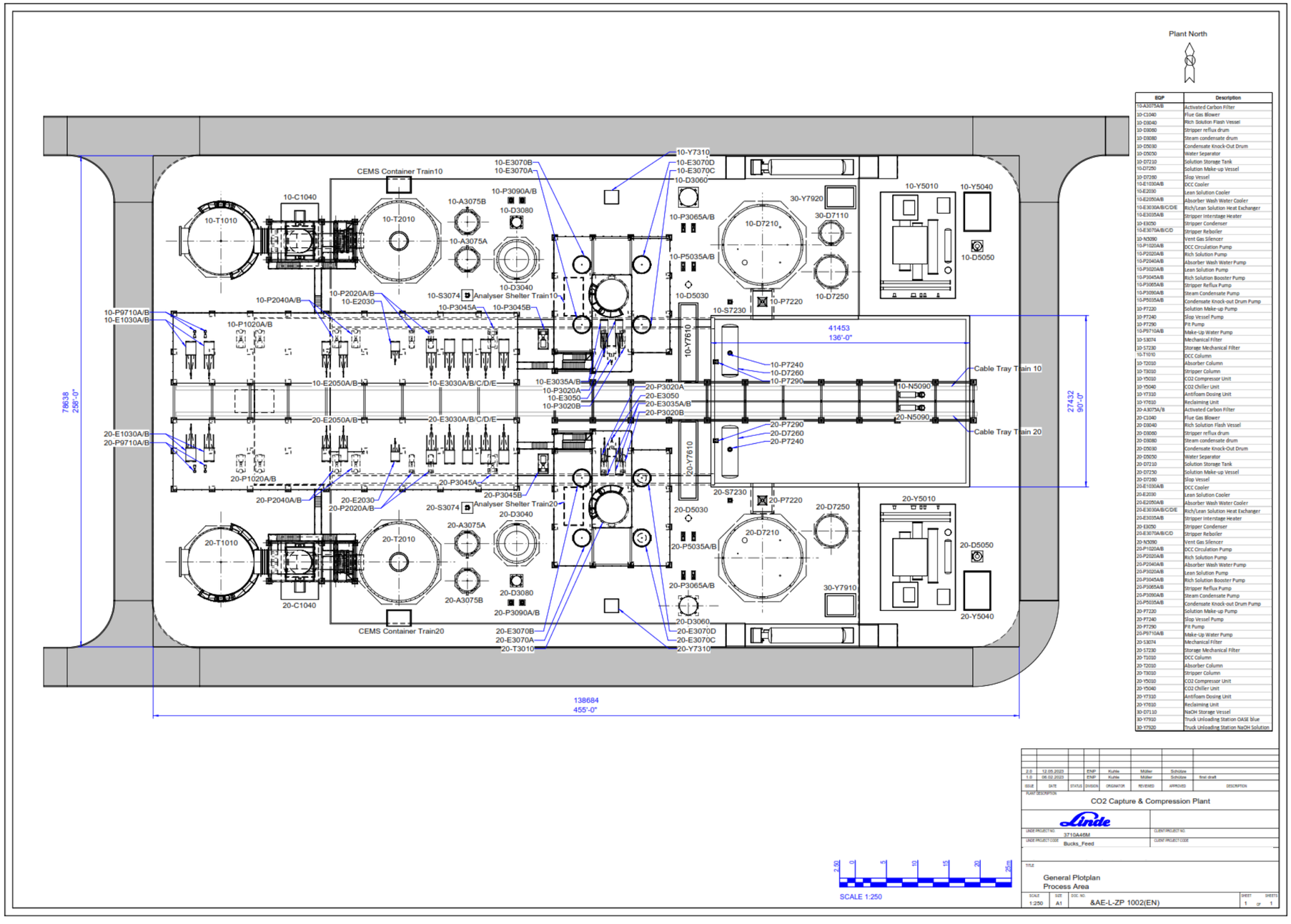

BGP	Description
10-A3075A/B	Activated Carbon Filter
10-C1040	Flue Gas Blower
10-D3040	Rich Solution Flash Vessel
10-D3060	Stripper reflux drum
10-D3080	Steam condensate drum
10-D5030	Condensate Knock-Out Drum
10-D5050	Water Separator
10-D7210	Solution Storage Tank
10-D7250	Solution Make-up Vessel
10-D7280	Slop Vessel
10-E1030A/B	DCC Cooler
10-E2030	Lean Solution Cooler
10-E2050A/B	Absorber Wash Water Cooler
10-E3030A/B/C/D/E	Rich/Lean Solution Heat Exchanger
10-E3035A/B	Stripper Interstage Heater
10-E3050	Stripper Condenser
10-E3070A/B/C/D	Stripper Reboiler
10-N5090	Vent Gas Silencer
10-P1020A/B	DCC Circulation Pump
10-P2020A/B	Rich Solution Pump
10-P2040A/B	Absorber Wash Water Pump
10-P3020A/B	Lean Solution Pump
10-P3045A/B	Rich Solution Booster Pump
10-P3065A/B	Stripper Reflux Pump
10-P3090A/B	Steam Condensate Pump
10-P5035A/B	Condensate Knock-out Drum Pump
10-P7220	Solution Make-up Pump
10-P7240	Slop Vessel Pump
10-P7290	Pit Pump
10-P9710A/B	Make-Up Water Pump
10-53074	Mechanical Filter
10-57230	Storage Mechanical Filter
10-T1010	DCC Column
10-T2010	Absorber Column
10-T3010	Stripper Column
10-Y5010	CO2 Compressor Unit
10-Y5040	CO2 Chiller Unit
10-Y7310	Antifoam Dosing Unit
10-Y7610	Reclaiming Unit
30-D7110	NaOH Storage Vessel
30-Y7910	Truck Unloading Station OASE blue
30-Y7920	Truck Unloading Station NaOH Solution
20-A3075A/B	Activated Carbon Filter
20-C1040	Flue Gas Blower
20-D3040	Rich Solution Flash Vessel
20-D3060	Stripper reflux drum
20-D3080	Steam condensate drum
20-D5030	Condensate Knock-Out Drum
20-D5050	Water Separator
20-D7210	Solution Storage Tank
20-D7250	Solution Make-up Vessel
20-D7280	Slop Vessel
20-E1030A/B	DCC Cooler
20-E2030	Lean Solution Cooler
20-E2050A/B	Absorber Wash Water Cooler
20-E3030A/B/C/D/E	Rich/Lean Solution Heat Exchanger
20-E3035A/B	Stripper Interstage Heater
20-E3050	Stripper Condenser
20-E3070A/B/C/D	Stripper Reboiler
20-N5090	Vent Gas Silencer
20-P1020A/B	DCC Circulation Pump
20-P2020A/B	Rich Solution Pump
20-P2040A/B	Absorber Wash Water Pump
20-P3020A/B	Lean Solution Pump
20-P3045A/B	Rich Solution Booster Pump
20-P3065A/B	Stripper Reflux Pump
20-P3090A/B	Steam Condensate Pump
20-P5035A/B	Condensate Knock-out Drum Pump
20-P7220	Solution Make-up Pump
20-P7240	Slop Vessel Pump
20-P7290	Pit Pump
20-P9710A/B	Make-Up Water Pump
20-53074	Mechanical Filter
20-57230	Storage Mechanical Filter
20-T1010	DCC Column
20-T2010	Absorber Column
20-T3010	Stripper Column
20-Y5010	CO2 Compressor Unit
20-Y5040	CO2 Chiller Unit
20-Y7310	Antifoam Dosing Unit
20-Y7610	Reclaiming Unit
30-D7110	NaOH Storage Vessel
30-Y7910	Truck Unloading Station OASE blue
30-Y7920	Truck Unloading Station NaOH Solution

ISSUE	DATE	STATUS	DIVISION	ORIGINATOR	REVIEWED	APPROVED	DESCRIPTION
2.0	12.05.2023		ENP	Kuhle	Müller	Schütze	
1.0	06.02.2023		ENP	Kuhle	Müller	Schütze	final draft

PLANT DESCRIPTION: CO2 Capture & Compression Plant

Linde

LINDE PROJECT NO.	3710A46M
CLIENT PROJECT NO.	
LINDE PROJECT CODE	Bucks_Feed
CLIENT PROJECT CODE	

TITLE: General Plotplan Process Area

SCALE	SIZE	DOC. NO.	SHEET	SHEETS
1:250	A1	&AE-L-ZP 1002(EN)	1	1

2.3.6 ISBL Elevation View

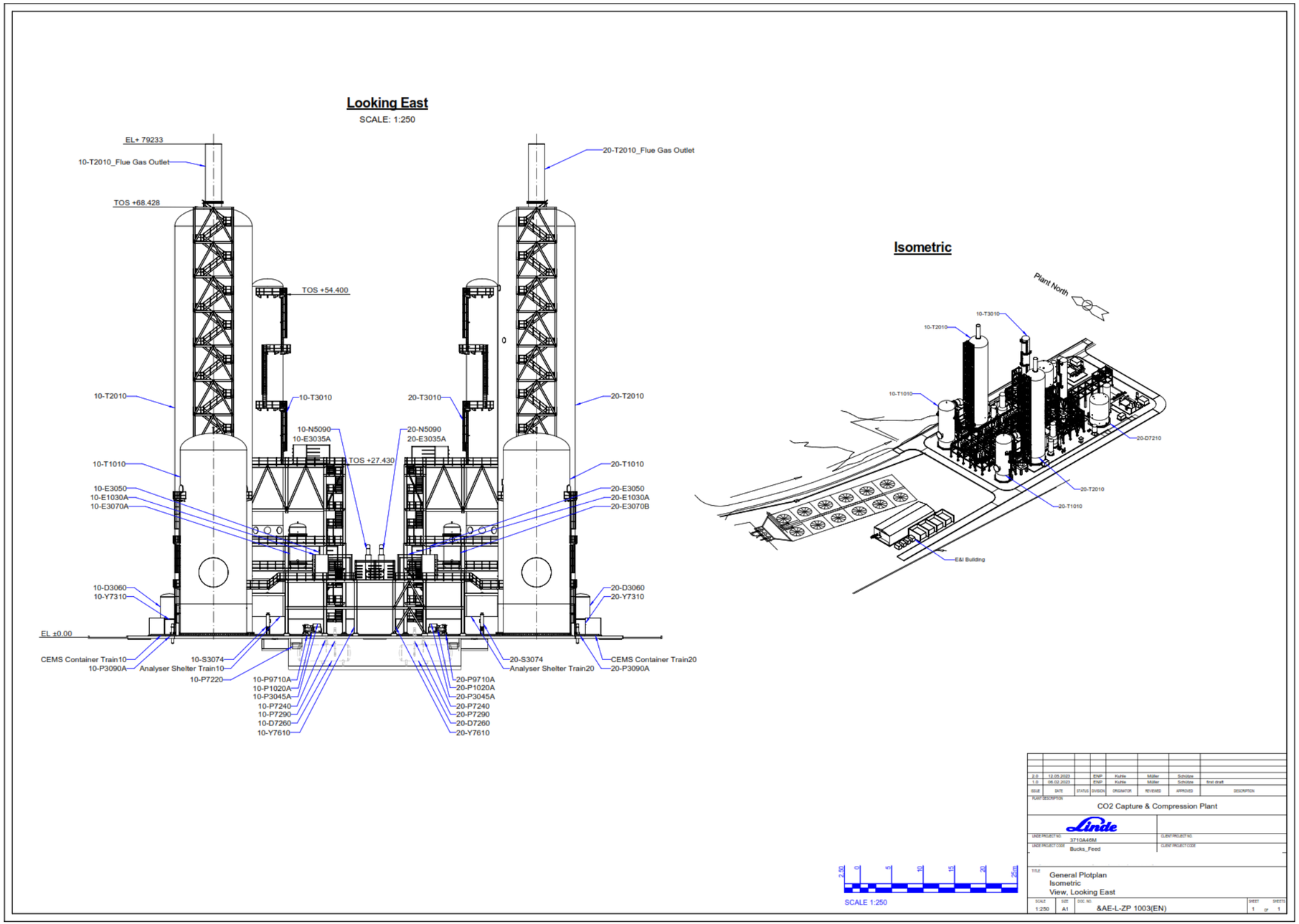

2.3.7 ISBL Containment Concept

This drawing provides both a plan view and written description of the civil containment concept.

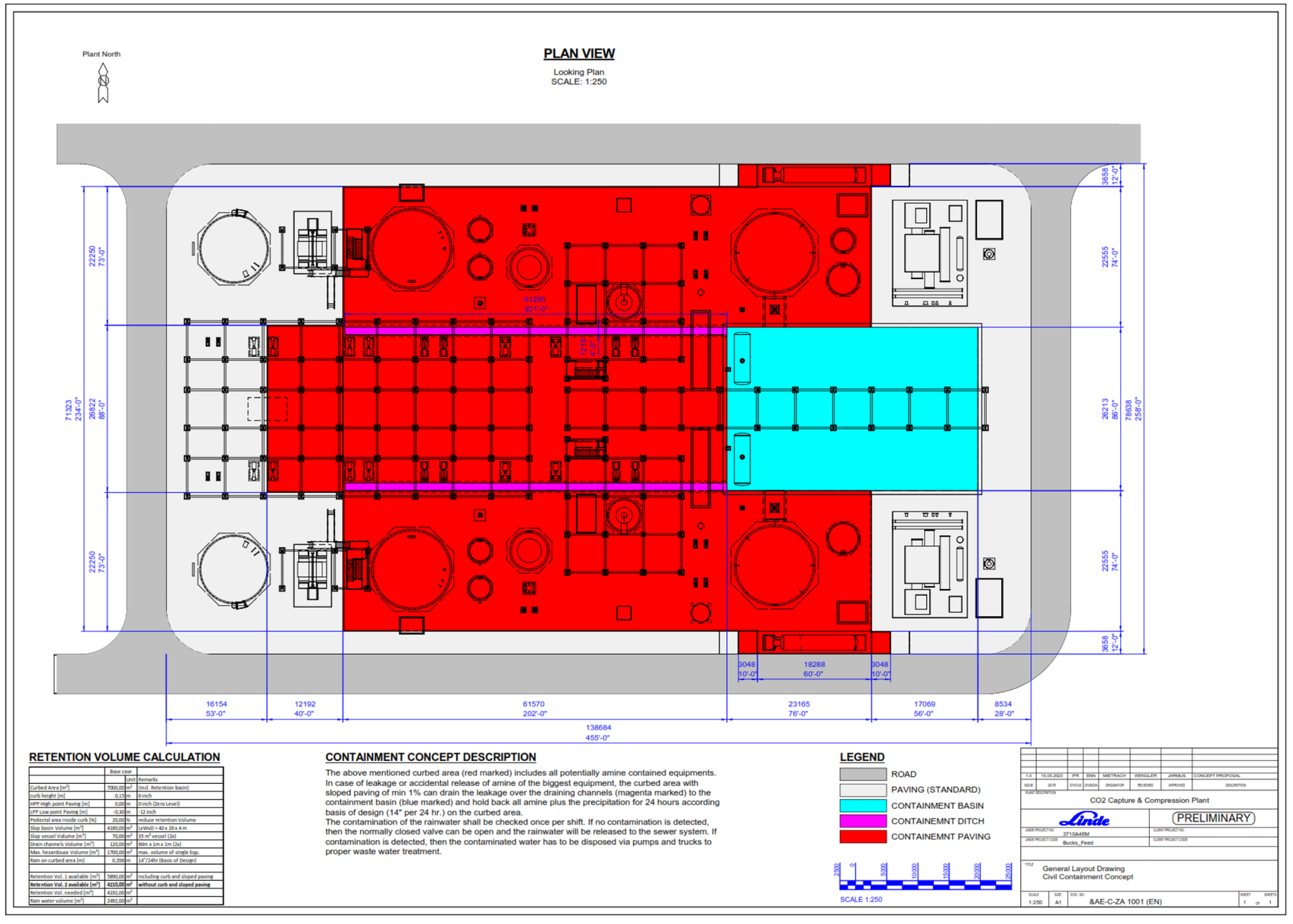

2.3.8 ISBL Battery Limit (Tie-in) Supply Conditions

The ISBL Battery Limit Supply Conditions Issue 2 dated 20/02/2023 was produced by Linde and provides supply conditions at the tie-in points and can be provided by Linde on request.

2.3.9 ISBL Equipment List

The ISBL Equipment List Issue 1 dated 03/07/2023 is available in Appendix I. This document was produced by Linde and contains information such as size, material, and operating conditions for the following equipment:

- Absorber
- Compressor / blower
- Decanter / vessel / deaerator
- Flat bottom tank
- Straight tube heat exchanger / heat recovery coil / TLX
- Electrical heater
- Plate & frame / welded plate heat exchanger
- Silencer
- Pump
- Filter
- Column
- Package unit

2.3.10 ISBL Electrical Load List

The ISBL Electrical Load List Issue 1 dated 06/04/2023 is available in Appendix J. This document was produced by Linde and provides information on electrical loads for the CO_2 capture and compression plant.

2.3.11 ISBL Instrumentation & Controls (I&C) Overview / Control System Architecture

Linde Engineering		
Project No.: 3710 A46M	Plant Description FEED Study for Carbon Capture Systems on Power Plants	Client Project No.:
Code: BUCKS		Client Code:
Doc. No: &AE J-ZX 212.2001	Page 1 of 5	Client Doc No: -

I&C System Overview / Control System Architecture

IFD	01	27.03.2023	U.Neumann	F.Doherr	G.Gaube	
Status	**Issue**	**Date**	**Prepared by**	**Checked by**	**Approved by**	**Remark**

Refer to protection notice ISO 16016

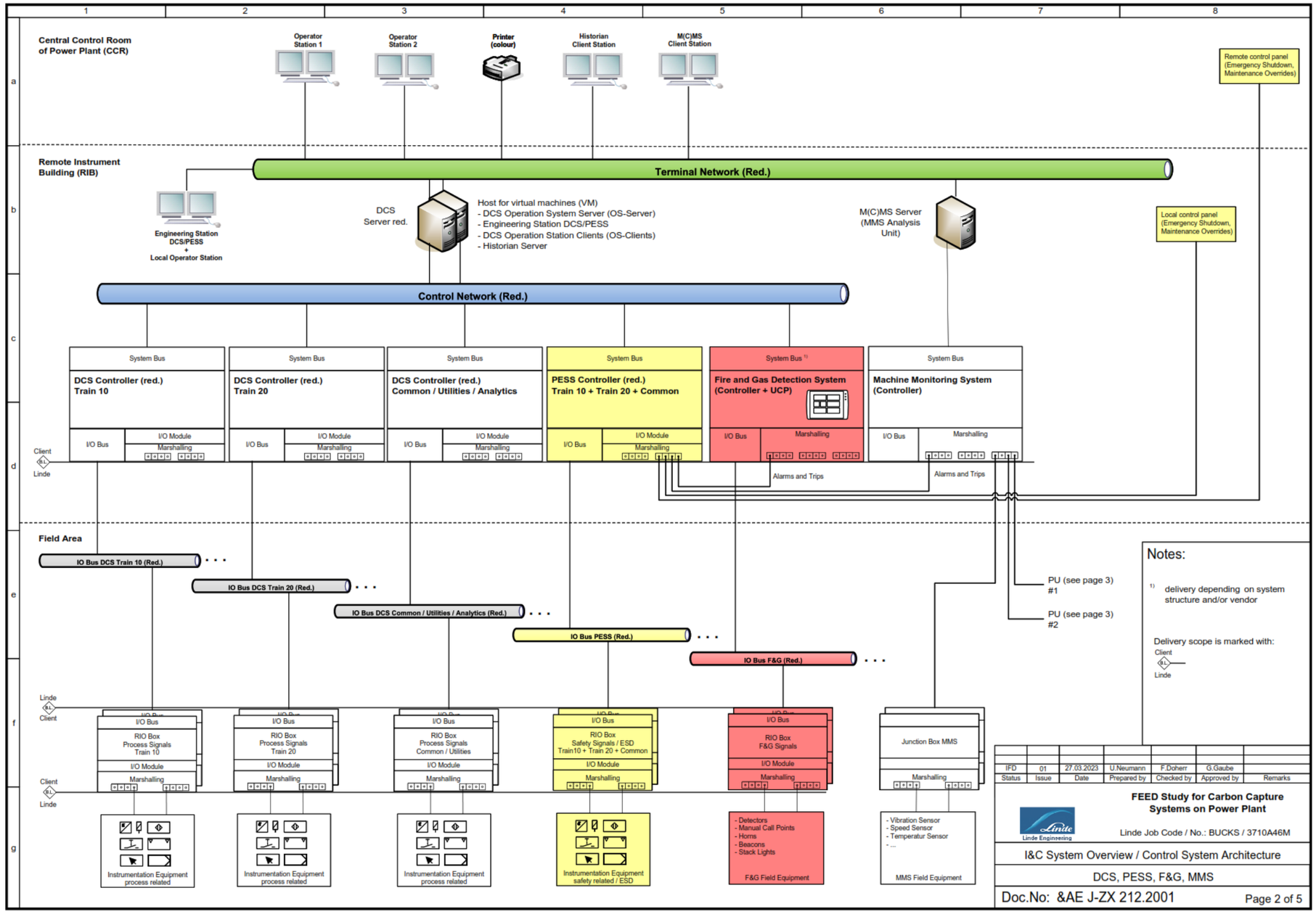
Central Control Room of Power Plant (CCR)
Operator Station 1
Operator Station 2
Printer (colour)
Historian Client Station
M(C)MS Client Station
Remote control panel (Emergency Shutdown, Maintenance Overrides)
Remote Instrument Building (RIB)
Terminal Network (Red.)
Engineering Station DCS/PESS + Local Operator Station
DCS Server red.
Host for virtual machines (VM)
- DCS Operation System Server (OS-Server)
- Engineering Station DCS/PESS
- DCS Operation Station Clients (OS-Clients)
- Historian Server
M(C)MS Server (MMS Analysis Unit)
Local control panel (Emergency Shutdown, Maintenance Overrides)
Control Network (Red.)
System Bus
DCS Controller (red.) Train 10
DCS Controller (red.) Train 20
DCS Controller (red.) Common / Utilities / Analytics
PESS Controller (red.) Train 10 + Train 20 + Common
System Bus *1)
Fire and Gas Detection System (Controller + UCP)
Machine Monitoring System (Controller)
I/O Bus
I/O Module
Marshalling
Client
Linde
Alarms and Trips
Field Area
IO Bus DCS Train 10 (Red.)
IO Bus DCS Train 20 (Red.)
IO Bus DCS Common / Utilities / Analytics (Red.)
IO Bus PESS (Red.)
IO Bus F&G (Red.)
PU (see page 3) #1
PU (see page 3) #2
RIO Box Process Signals Train 10
RIO Box Process Signals Train 20
RIO Box Process Signals Common / Utilities
RIO Box Safety Signals / ESD Train10 + Train 20 + Common
RIO Box F&G Signals
Junction Box MMS
Instrumentation Equipment process related
Instrumentation Equipment safety related / ESD
- Detectors
- Manual Call Points
- Horns
- Beacons
- Stack Lights
F&G Field Equipment
- Vibration Sensor
- Speed Sensor
- Temperatur Sensor
- ...
MMS Field Equipment
Notes:
1) delivery depending on system structure and/or vendor
Delivery scope is marked with:
Client
Linde
IFD 01 27.03.2023 U.Neumann F.Doherr G.Gaube
Status Issue Date Prepared by Checked by Approved by Remarks
FEED Study for Carbon Capture Systems on Power Plant
Linde Engineering
Linde Job Code / No.: BUCKS / 3710A46M
I&C System Overview / Control System Architecture
DCS, PESS, F&G, MMS
Doc.No: &AE J-ZX 212.2001
Page 2 of 5

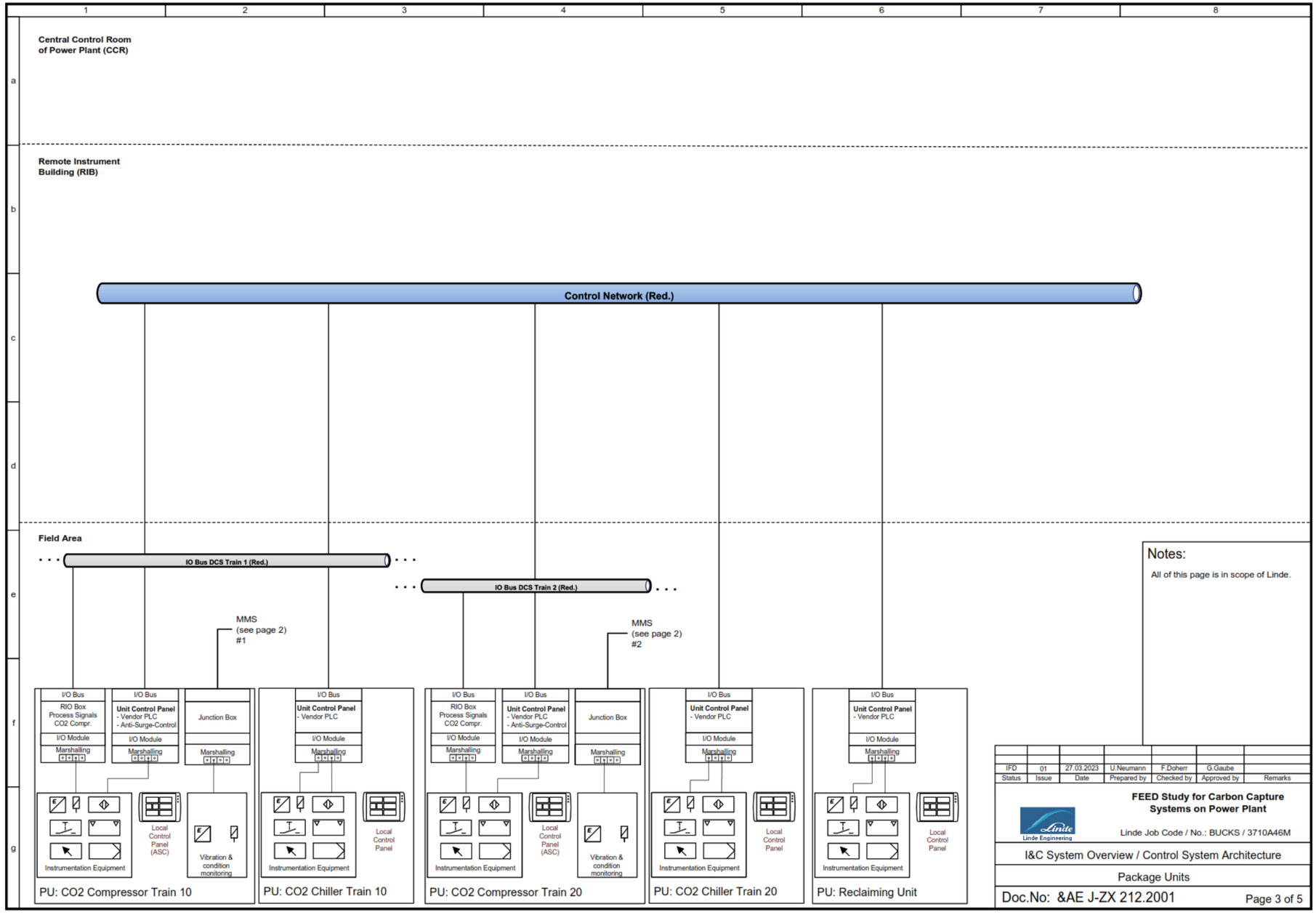
Central Control Room
of Power Plant (CCR)
Remote Instrument
Building (RIB)
Control Network (Red.)
Field Area
IO Bus DCS Train 1 (Red.)
IO Bus DCS Train 2 (Red.)
MMS
(see page 2)
#1
MMS
(see page 2)
#2
I/O Bus
RIO Box
Process Signals
CO2 Compr.
Unit Control Panel
- Vendor PLC
- Anti-Surge-Control
Junction Box
I/O Module
Marshalling
Instrumentation Equipment
Local
Control
Panel
(ASC)
Vibration &
condition
monitoring
PU: CO2 Compressor Train 10
PU: CO2 Chiller Train 10
PU: CO2 Compressor Train 20
PU: CO2 Chiller Train 20
PU: Reclaiming Unit
Notes:
All of this page is in scope of Linde.
IFD
01
27.03.2023
U.Neumann
F.Doherr
G.Gaube
Status
Issue
Date
Prepared by
Checked by
Approved by
Remarks
FEED Study for Carbon Capture
Systems on Power Plant
Linde Engineering
Linde Job Code / No.: BUCKS / 3710A46M
I&C System Overview / Control System Architecture
Package Units
Doc.No: &AE J-ZX 212.2001
Page 3 of 5

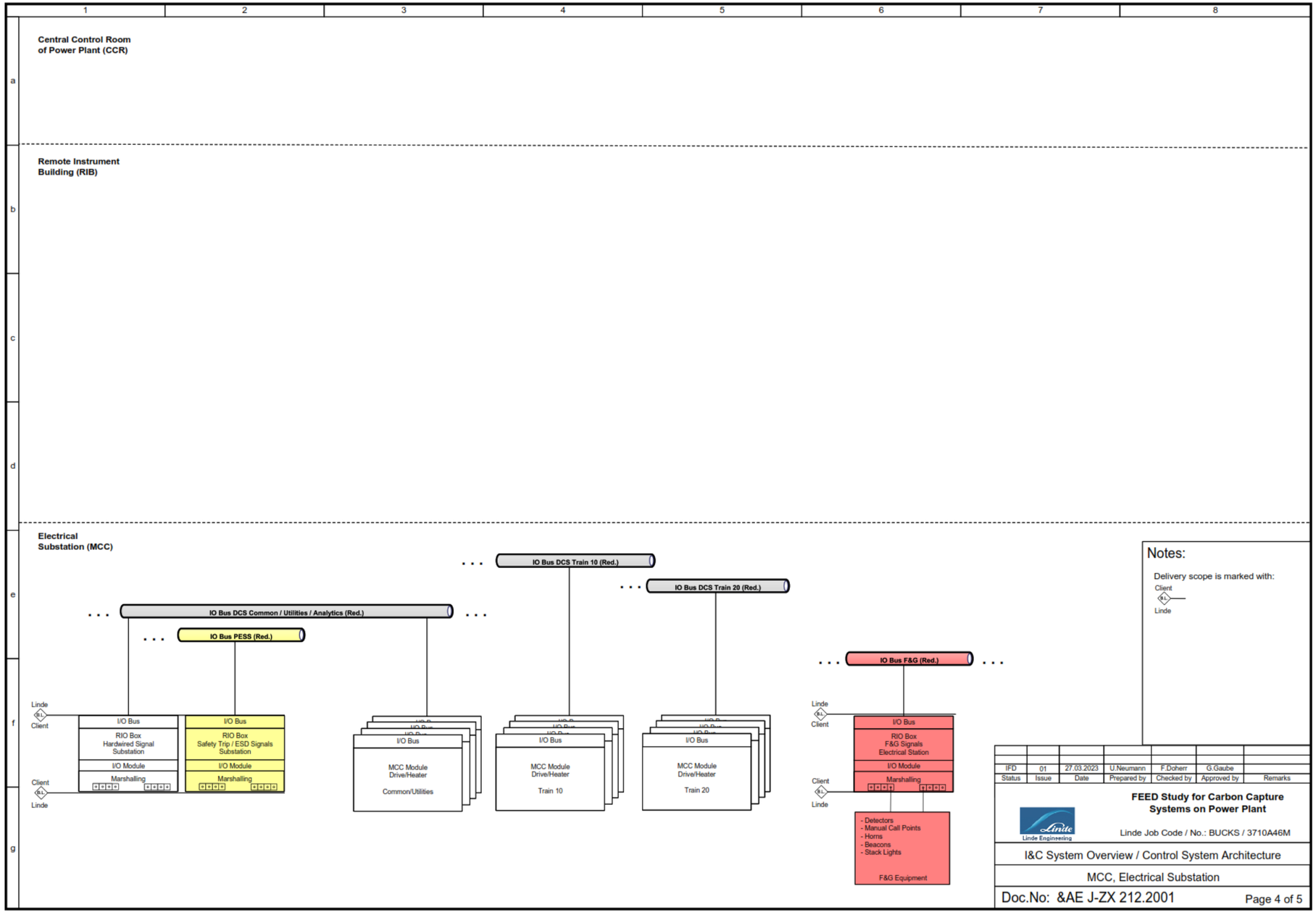
Central Control Room
of Power Plant (CCR)
Remote Instrument
Building (RIB)
Electrical
Substation (MCC)
IO Bus DCS Train 10 (Red.)
IO Bus DCS Train 20 (Red.)
IO Bus DCS Common / Utilities / Analytics (Red.)
IO Bus PESS (Red.)
IO Bus F&G (Red.)
Linde
Client
I/O Bus
RIO Box
Hardwired Signal
Substation
I/O Module
Marshalling
I/O Bus
RIO Box
Safety Trip / ESD Signals
Substation
I/O Module
Marshalling
I/O Bus
MCC Module
Drive/Heater
Common/Utilities
I/O Bus
MCC Module
Drive/Heater
Train 10
I/O Bus
MCC Module
Drive/Heater
Train 20
I/O Bus
RIO Box
F&G Signals
Electrical Station
I/O Module
Marshalling
- Detectors
- Manual Call Points
- Horns
- Beacons
- Stack Lights
F&G Equipment
Notes:
Delivery scope is marked with:
Client
Linde
IFD 01 27.03.2023 U.Neumann F.Doherr G.Gaube
Status Issue Date Prepared by Checked by Approved by Remarks
FEED Study for Carbon Capture
Systems on Power Plant
Linde Job Code / No.: BUCKS / 3710A46M
I&C System Overview / Control System Architecture
MCC, Electrical Substation
Doc.No: &AE J-ZX 212.2001
Page 4 of 5

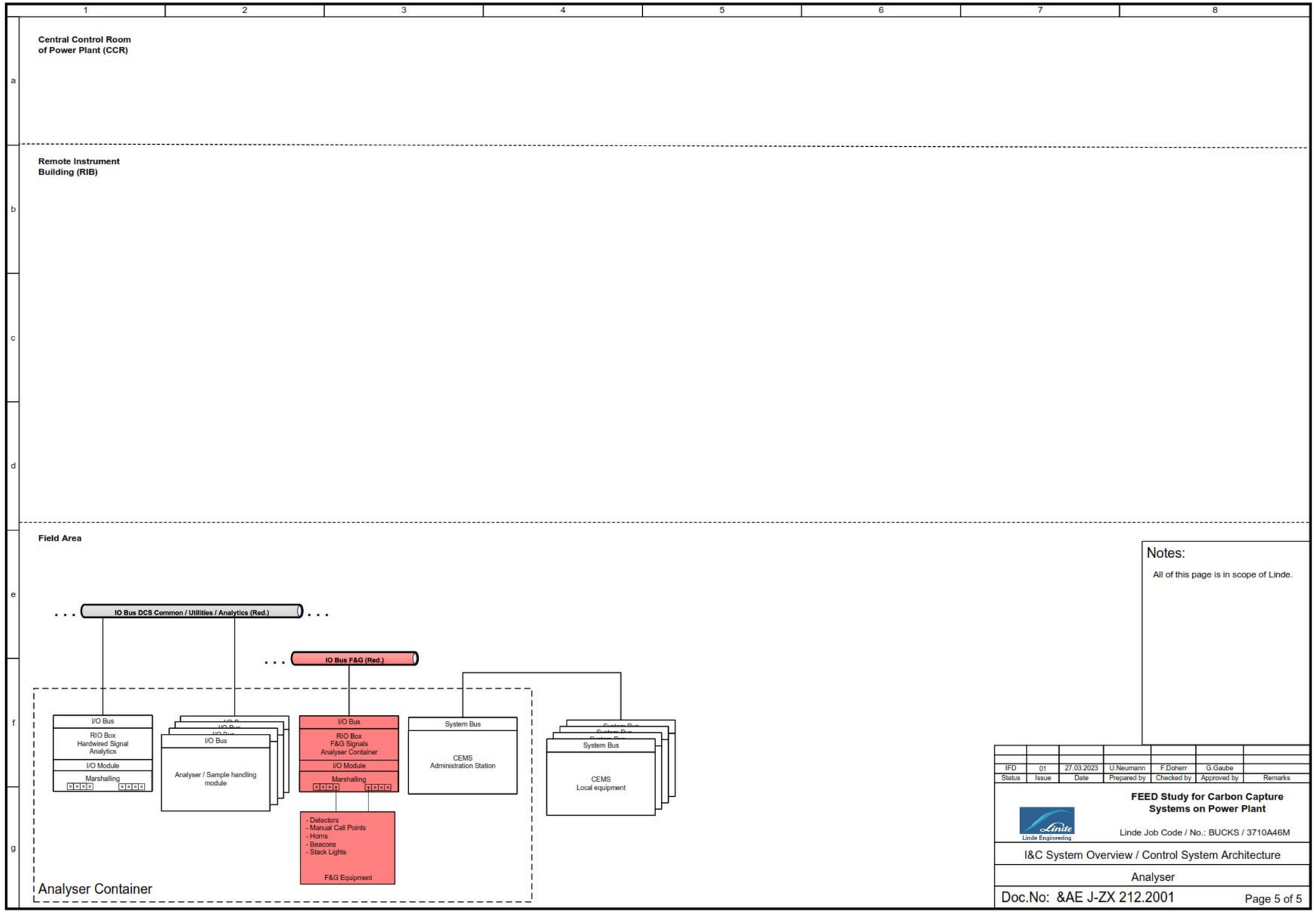
Central Control Room
of Power Plant (CCR)
Remote Instrument
Building (RIB)
Field Area
IO Bus DCS Common / Utilities / Analytics (Red.)
IO Bus F&G (Red.)
I/O Bus
RIO Box
Hardwired Signal
Analytics
I/O Module
Marshalling
I/O Bus
Analyser / Sample handling
module
I/O Bus
RIO Box
F&G Signals
Analyser Container
I/O Module
Marshalling
- Detectors
- Manual Call Points
- Horns
- Beacons
- Stack Lights
F&G Equipment
System Bus
CEMS
Administration Station
System Bus
CEMS
Local equipment
Analyser Container
Notes:
All of this page is in scope of Linde.
IFD | 01 | 27.03.2023 | U.Neumann | F.Doherr | G.Gaube
Status | Issue | Date | Prepared by | Checked by | Approved by | Remarks
FEED Study for Carbon Capture
Systems on Power Plant
Linde Job Code / No.: BUCKS / 3710A46M
I&C System Overview / Control System Architecture
Analyser
Doc.No: &AE J-ZX 212.2001
Page 5 of 5

2.3.12 ISBL Principle Electrical One Line Diagram

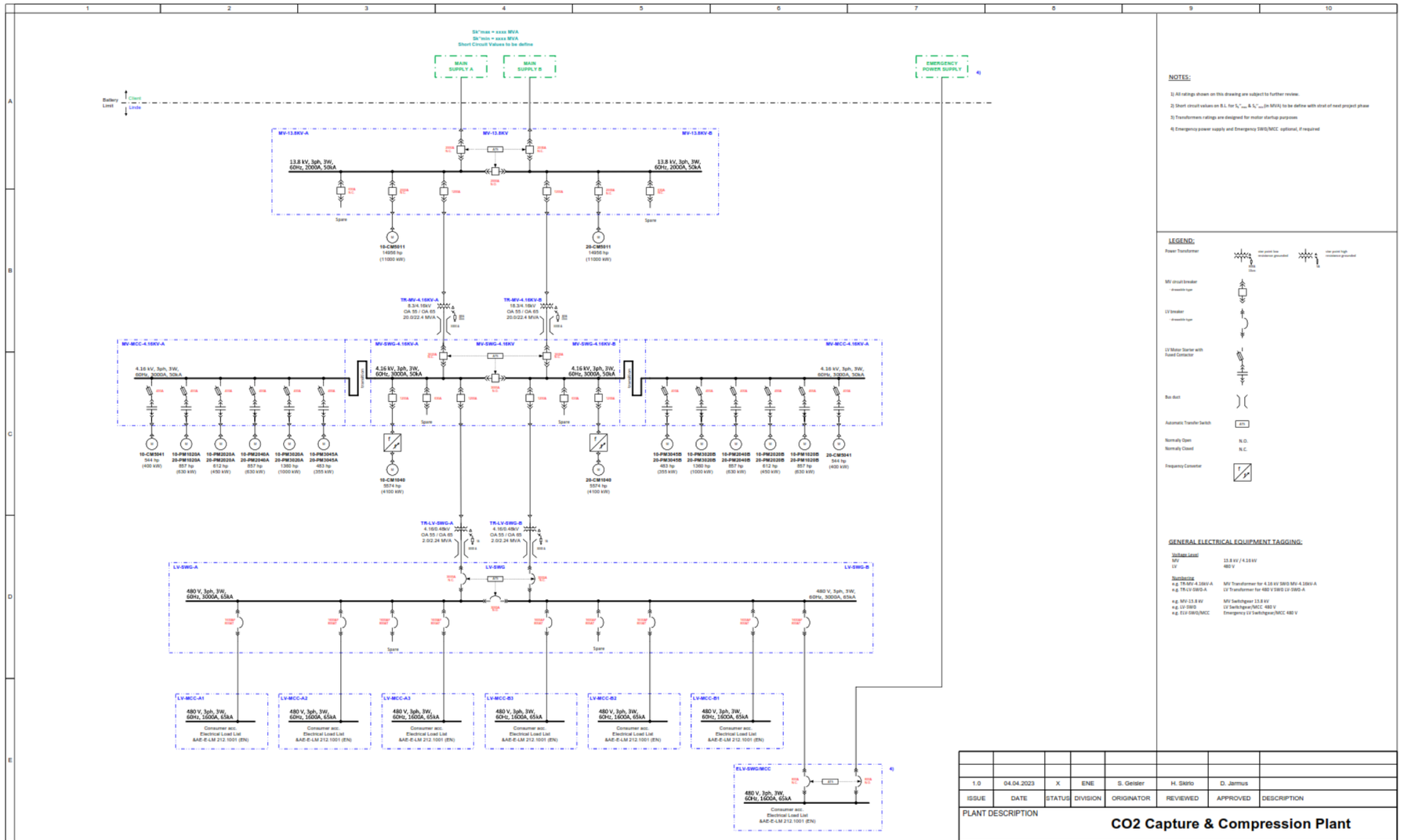

2.3.13 ISBL General Electrical Design Specification

The ISBL General Electrical Design Specification Issue 1 dated 06/04/2023 is available in Appendix K. This document was produced by Linde and addresses requirements for different engineering phases (concept, FEED, basic, detail) for the design and performance of the electrical systems and facilities, together with the applicable standards and codes of the process plant.

2.3.14 ISBL Emissions and Effluents

The ISBL Emissions and Effluents Issue 1 dated 14/12/2022 was produced by Linde and contains information such as emissions, effluents, and solid waste and can be provided by Linde on request.

2.3.15 ISBL Utility and Chemical Consumption

The ISBL Utility and Chemical Consumption Issue 1 dated 14/12/2022 was produced by Linde and contains information such as utility, raw materials, and chemical consumption and can be provided by Linde on request.

2.3.16 ISBL Process, Plant and Environmental Safety

Process safety, plant safety, and environmental safety are ensured by using proven technologies. The facility is designed in accordance with state-of-the-art standards and complies with applicable codes. It is equipped with adequate safety and environmental protection systems to enable safe operation and to meet allowable emission limits.

Pressure and Temperature Protection

Safety is ensured in design by using proven technologies. Where reasonably practicable, processes are designed to have inherent or passive safety. Generally, safety considers independent disturbances (single failure principle). Single disturbances will be covered by design and when this is not possible, safeguards (for example: pressure relieving devices and safety instrumented systems, SIS) will be applied.

Also, all unfired pressure vessels will be designed in accordance with ASME Sec. VIII, and overpressure will be protected by pressure relieving devices. The sizing, selection and installation of pressure relieving devices are defined in API Std. 521. The causes of overpressure described in API Std. 521 will be considered within the design.

A safety instrumented system (SIS) implements the safety instrumented functions (SIF) required to achieve or to maintain a safe state of the process and, as such, contributes towards the necessary risk reduction to meet the tolerable risk.

A SIS includes all components and subsystems necessary to carry out the safety instrumented function from sensor(s) to final element(s). The subsystem may comprise the logic solver, software, hardware, hardwired electrical or electronic systems, mechanical, hydraulic, or pneumatic systems, etc. Components of a safety instrumented system may be used by more than one safety instrumented function. The SIS system will meet the requirements of IEC 61511 and IEC 61508.

Environmental Protection and Noise Control

Environmental guidelines are subject to US OSHA and local regulations.

Systematic Safety Studies

To ensure safety, operability, and maintainability, a Hazard and Operability Analysis (HAZOP) was conducted. A summary of the HAZOP is available in Section 2.5.9.

2.3.17 ISBL Subcontractor List

The ISBL equipment is supplied by Linde with solvent from BASF. A detailed subcontractors list can be provided by Linde upon request.

2.3.18 ISBL Details of Equipment and Module Foundation

The primary ISBL foundation includes the slop containment base and exterior walls, pipe rack piers, and abutments. See Figure 8 and Table 19 for layout and sizes.

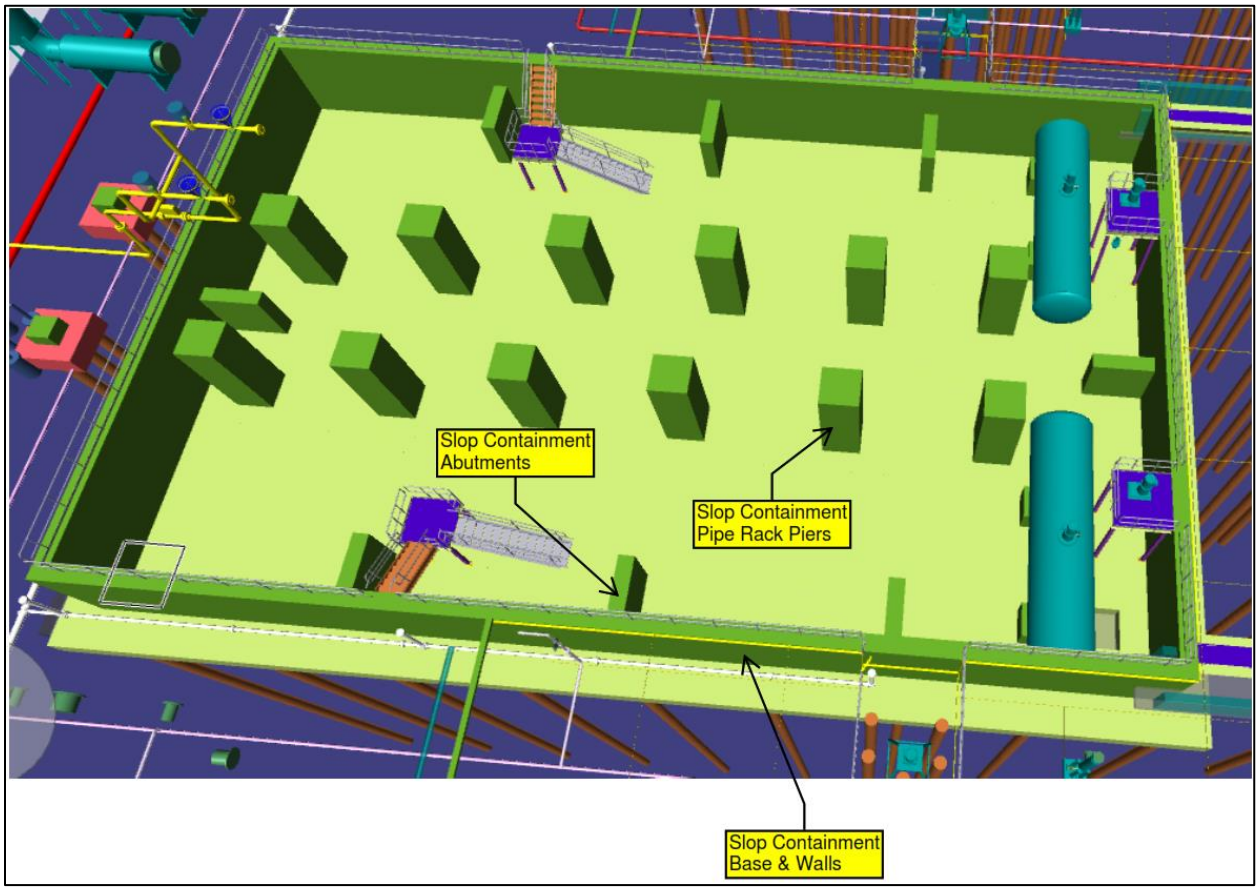

Figure 8: 3D View of Preliminary ISBL Foundations

	Pile Cap / Sump Base / Top Table			Pedestals / Sump Walls / Table Legs (Wall Total Length)			Auger Case Piles			Con-crete	Grout
	Rec L ft	Rec W ft	Depth ft	Length ft	Width ft	Depth ft	Qty per Pile Cap	Diam in	Depth ft	cubic yds	cubic yds
Slop Containment Basin											
Base and Exterior Walls	141.3	92.3	3.0	419.0	2.0	14.5	54	18	100	1,898	236
Pipe Rack Piers				5.0	5.0	14.5				161	
Abutments				8.0	2.0	8.0				38	

Table 19: Preliminary ISBL Foundation Dimensions

2.3.19 Reclamation of Amine

There are several reclaiming processes available commercially. In an ion-exchange method, anions of heat stable salts are selectively removed by ion-exchange resins. Amine solution depleted of heat stable anions is returned to the amine unit. The resins are regenerated using dilute caustic (NaOH) solution and wastewater containing concentrated salt (10 – 20%) is disposed. Overall amine recovery is 99%.

2.4 Task 2.4 - Outside Battery Limits (OSBL) Detailed Design

2.4.1 OSBL Plot Plan

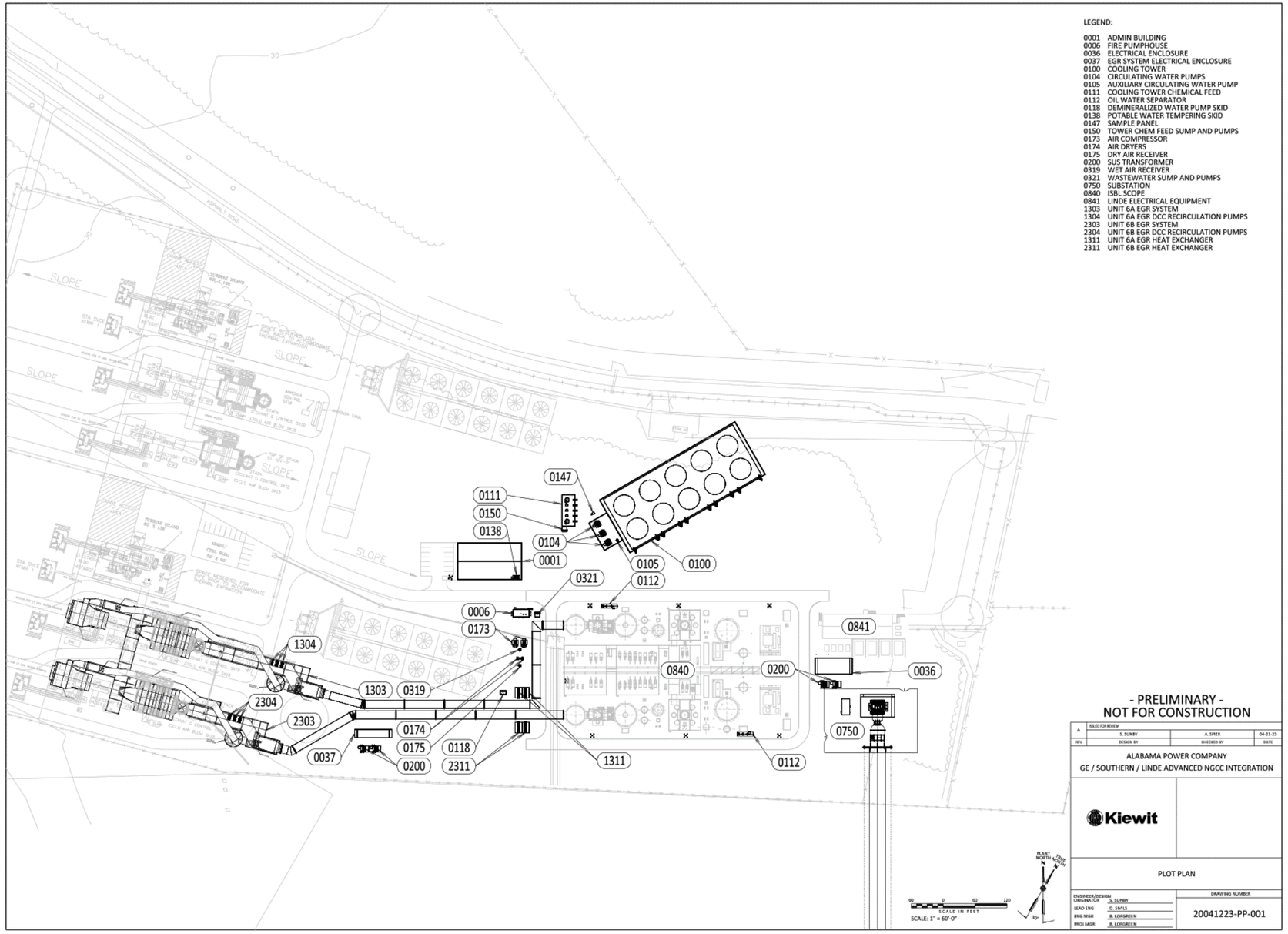

2.4.2 OSBL Piping & Instrumentation Drawings (P&IDs)

OSBL Piping and Instrumentation Diagrams Revision 0 dated 04/14/2023 is available in Appendix L. This document was produced by Kiewit and includes the following drawings:

- OSBL Legend for Piping and Components
- OSBL Legend for Instruments and Control Valves
- OSBL Legend for Equipment I
- OSBL P&ID Drawing Index
- OSBL P&IDs

2.4.3 OSBL System Process Flow Diagram

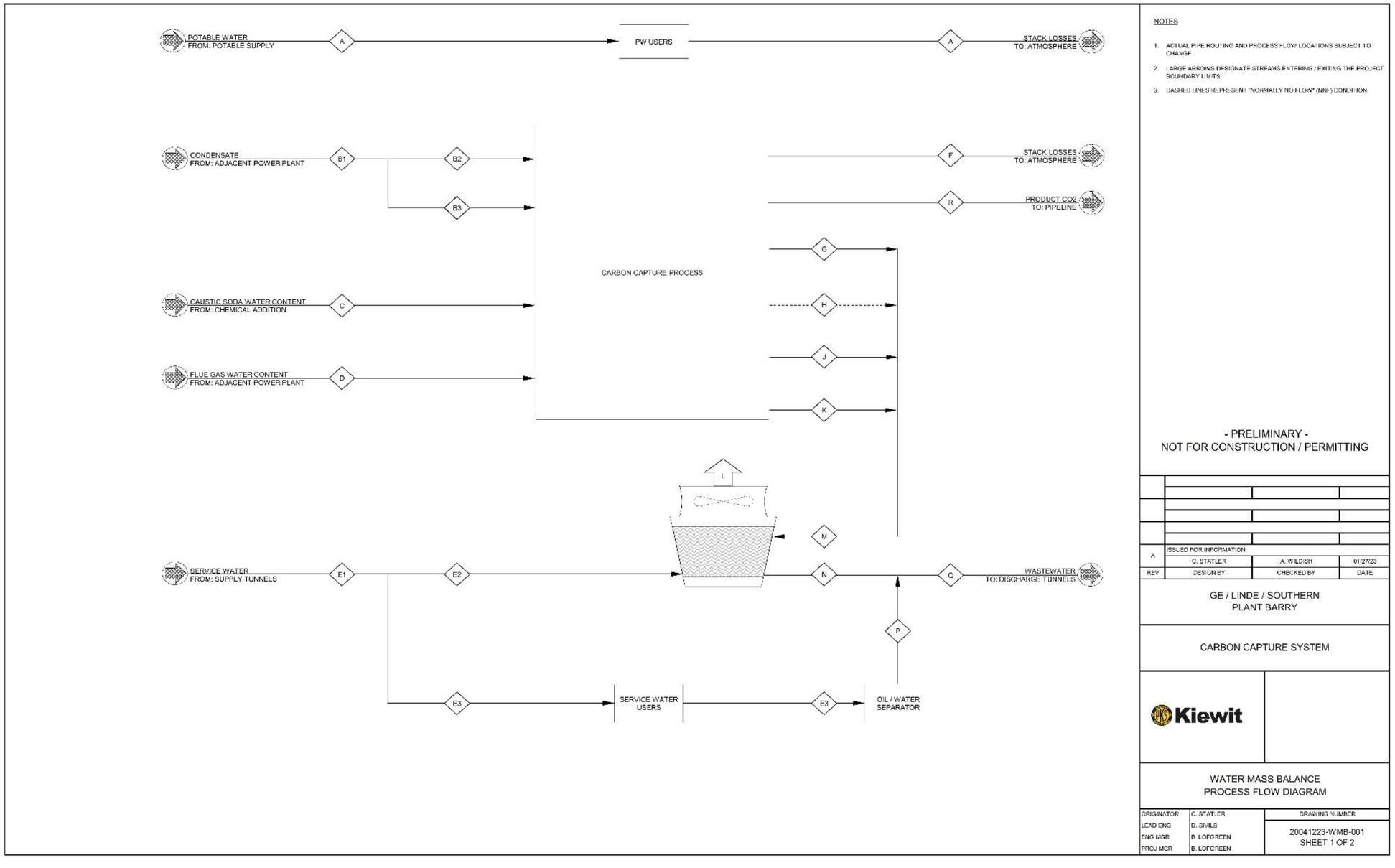

2.4.4 OSBL System Water Mass Balance

ESTIMATED STREAM FLOWRATES

PLANT DESIGN	DESIGN CASE
CARBON CAPTURE OEM	LINDE
CARBON CAPTURE THROUGHPUT	241,337 LBM / HR
NUMBER OF OPERATING CARBON CAPTURE TRAINS	2
FLUE GAS FUEL	NATURAL GAS
COMBUSTION TURBINE OEM	GENERAL ELECTRIC

STREAM	DESCRIPTION	LINDE STREAM NUMBER	MASS FLOW LBM / HR	TEMPERATURE °F	LIQUID DENSITY LBM / GAL	VOLUMETRIC FLOW GAL / MIN	NOTES
A	POTABLE WATER	N/A	999.9	65.0	8.33	2.0	2
B1	COMBINED DEMINERALIZED SUPPLY	N/A	54,342.9	65.0	8.33	108.7	2
B2	DEMINERALIZED WATER TO ABSORBER	1097/2097-1010	37,796.6	65.0	8.33	75.6	6
B3	DEMINERALIZED WATER TO RECLAIMING UNIT	1097/2097-7610	16,546.3	65.0	8.33	33.1	6
C	CAUSTIC SODA WATER CONTENT	1097/2097-7610	208.7	87.5	8.31	0.4	6
D	FLUE GAS WATER CONTENT	1010/2010-1001	313,644.0	203.0	VAPOR STREAM	VAPOR STREAM	4, 6
E1	COMBINED SERVICE WATER SUPPLY	N/A	1,395,131.3	65.0	8.33	2,790.5	2
E2	COOLING TOWER MAKEUP	N/A	1,382,632.4	65.0	8.33	2,765.5	2
E3	SERVICE WATER USERS	N/A	12,498.9	65.0	8.33	25.0	2
F	STACK LOSSES	1020/2020-1020	227,104.6	108.1	VAPOR STREAM	VAPOR STREAM	4, 6
G	DIRECT CONTACT COOLER BLOWDOWN	1094/2094-1012	125,177.9	95.7	8.29	251.5	6
H	STRIPPER REFLUX PUMP BLEED	N/A	NNF	TBD	TBD	NNF	5
J	COMPRESSION CONDENSATE	1094/2094-5001	6,635.2	107.1	8.27	13.4	6
K	RECLAIMING UNIT WASTEWATER	1076/2076-9430	9,193.5	65.7	8.33	18.4	6
L	COOLING TOWER EVAPORATION	N/A	1,015,759.4	TBD	VAPOR STREAM	VAPOR STREAM	4, 6, 7
M	COMBINED CARBON CAPTURE WASTEWATER	N/A	141,006.6	94.4	8.30	283.3	3
N	COOLING TOWER BLOWDOWN	N/A	507,879.7	86.0	8.31	1,018.7	
P	OIL / WATER SEPARATOR EFFLUENT	N/A	12,498.9	65.0	8.33	25.0	2
Q	COMBINED WASTEWATER	N/A	520,378.6	84.4	8.31	1,043.5	3
R	PRODUCT CO2 TO PIPELINE	1050/2076-2020	118.6	115.0	VAPOR STREAM	VAPOR STREAM	4

NOTES

1. INSTANTANEOUS DEMANDS ARE MET BY UTILIZING THE RESPECTIVE SERVICE WATER OR DEMINERALIZED WATER STORAGE TANK VOLUMES.
2. FOR CONSISTENCY, BALANCE OF PLANT STREAMS NOT PROVIDED IN THE LINDE HEAT AND MASS BALANCE ARE ASSUMED TO BE AT 65 °F.
3. TEMPERATURES OF COMBINED WASTEWATER STREAMS APPROXIMATED VIA ENTHALPY BALANCE.
4. VOLUMETRIC FLOWS OF VAPOR PHASE STREAMS EXITING THE PLANT BOUNDARY ARE NOT CALCULATED.
5. STREAM NORMALLY NO FLOW, STREAM CALLOUT NO PROVIDED IN LINDE HEAT AND MASS BALANCE.
6. LINDE HEAT AND MASS BALANCE STREAM FLOW DATA PROVIDED ON A TOTAL PLANT BASIS.
7. COOLING TOWER EVAPORATION IS APPROXIMATED AND SUBJECT TO CHANGE BASED ON SUPPLIER INPUT AND VERIFICATION.

- PRELIMINARY -
NOT FOR CONSTRUCTION / PERMITTING

REV	DESIGN BY	CHECKED BY	DATE
A	ISSUED FOR INFORMATION		
	C. STATLER	A. WILDISH	5/12/23

GE / LINDE / SOUTHERN
PLANT BARRY

CARBON CAPTURE SYSTEM

Kiewit

WATER MASS BALANCE
ESTIMATED STREAM FLOWRATES

ORIGINATOR	C. STATLER	DRAWING NUMBER
FAD ENG	D. SIVITS	20041223-WMB-001
ENG MGR	B. LOFGREEN	SHEET 2 OF 2
PROJ MGR	B. LOFGREEN	

2.4.5 OSBL Fire Protection Layout

The OSBL Fire Protection Layout Revision A is available in Appendix M. This drawing was produced by Kiewit and provides a plot plan sketch of the underground firewater system.

2.4.6 CCS Admin Building Layout

The CCS Admin Building Layout is available in Appendix N. This sketch was produced by Kiewit.

2.4.7 OSBL 230-13.8 kV Substation General Arrangement

The OSBL 230-13.8 kV Substation General Arrangement Revision 0 dated 04/13/2023 is available in Appendix O. This drawing was produced by Kiewit.

2.4.8 OSBL Mechanical Equipment List

The OSBL Mechanical Equipment List Revision 0 dated 4/14/2323 is available in Appendix P. This document was produced by Kiewit and provides information on the following equipment:

- Cooling water system
- Flue gas system
- Demineralized water system
- Sampling
- Tower chemical feed
- Service water
- Potable water
- Instrument air
- Waste water
- Plant drains

2.4.9 OSBL Mechanical Terminal Point List

Kiewit

MECHANICAL TERMINAL POINT LIST
20041223-MTP-001

RETROFITTABLE ADVANCED COMBINED CYCLE INTEGRATION
FOR FLEXIBLE DECARBONIZED GENERATION
DE-FE-0032131

KIEWIT PROJECT NO. 20041223

ISSUED: APRIL 14, 2023

REVISION 0 – ISSUED FOR FEED

GE/SOUTHERN/LINDE ADVANCED NGCC INTEGRATION TERMINAL POINT LIST

Kiewit

TP #	TIE-IN POINT DESCRIPTION[1]	Linde Tie-In Point #	LINDE STREAM NUMBER [4]	LINDE P&ID NUMBER[2]	SYS CODE	SYSTEM DESCRIPTION	FLOW		PRESSURE		TEMP		Reference Document	KIEWIT P&ID NUMBER	NOTES
							DESIGN	OP.	DESIGN	OP.	DESIGN	OP.			
TP-003	CT/HRSG FLUE GAS 1 TO LINDE DCC COLUMN 10-T1010	TP-10-01	1010-1001 (TBV)	&AE-1000-P-FP-1010	FLG	Flue Gas	2,452,737 LB/HR	2,438,737 LB/HR	1.5 PSIG / FV	14.52 PSIA	225 F	210 F	LINDE Document &AE-1000-P-LR-1001 Issue 2, Dated 02/20/2023	20041223-PD-681	
TP-004	CT/HRSG FLUE GAS 2 TO LINDE DCC COLUMN 20-T1010	TP-20-01	2010-1001 (TBV)	N/A	FLG	Flue Gas	2,452,737 LB/HR	2,438,737 LB/HR	1.5 PSIG / FV	14.52 PSIA	225 F	210 F	LINDE Document &AE-1000-P-LR-1001 Issue 2, Dated 02/20/2023	20041223-PD-681	
TP-005A	LOW PRESSURE STEAM FROM BARRY UNIT LOW PRESSURE SUPER HEATER OUTLET HEADER TO TURBINE	N/A	N/A	N/A	LPS	Low Pressure Steam	117,587 LB/HR	116,525 LB/HR	150 PSIG	72.52 PSIA	345 F	500 F	LINDE Document &AE-1000-P-LR-1001 Issue 2, Dated 02/20/2023	20041223-PD-620	
TP-005B	LOW PRESSURE STEAM FROM BARRY UNIT LOW PRESSURE CROSSOVER	N/A	N/A	N/A	LPS	Low Pressure Steam	470,348 LB/HR	466,098 LB/HR	150 PSIG	72.52 PSIA	345 F	590 F	LINDE Document &AE-1000-P-LR-1001 Issue 2, Dated 02/20/2023	20041223-PD-620	
TP-005C	HIGH PRESSURE MAKEUP STEAM FROM BARRY	N/A	N/A	N/A	LPS	Low Pressure Steam	587,934 LB/HR	582,622 LB/HR	2025 PSIG	1853 PSIA	1,030 F	1,018.9 F	LINDE Document &AE-1000-P-LR-1001 Issue 2, Dated 02/20/2023	20041223-PD-620	
TP-006A	LP STEAM SUPPLY TO LINDE LP STEAM HEADER	TP-30.03.1	3092-1001 (C)	&AE-3000-P-FP-0300	LPS	Low Pressure Steam	587,934 LB/HR	582,622 LB/HR	55 PSIA	55 PSIA	307 F	307 F	LINDE Document &AE-1000-P-LR-1001 Issue 2, Dated 02/20/2023	20041223-PD-620	
TP-006B	LP STARTUP STEAM TO LINDE LP STEAM HEADER	TP-30.03.2	3092-1001 (C)	&AE-3000-P-FP-0300	LPS	Low Pressure Steam	HOLD LB/HR	HOLD LB/HR	55 PSIA	55 PSIA	307 F	307 F	LINDE Document &AE-1000-P-LR-1001 Issue 2, Dated 02/20/2023	20041223-PD-620	
TP-007A/B	COOLING WATER SUPPLY TO LINDE COOLING WATER SUPPLY HEADER	TP-30.01.1 (A) and 30.01.2 (B)	1091-1001 (A) and xxxx-xxxx(B)	&AE-3000-P-FP-0300	CWS	Circulating Water	112,298 GPM	112,298 GPM	145 PSIG	75 PSIA	115 F	86 F	LINDE Document &AE-1000-P-LR-1001 Issue 2, Dated 02/20/2023	20041223-PD-661	FLOWRATE FOR BOTH TRAINS; 56,149 GPM PER TRAIN
TP-008A/B	COOLING WATER RETURN FROM LINDE COOLING WATER RETURN HEADER	TP-30.02.1 (A) and 30.02.2 (B)	1091-1002 (A) and 2091-1001 (B)	&AE-3000-P-FP-0300	CWS	Circulating Water	112,660 GPM	112,660 GPM	145 PSIG	35 PSIA	115 F	103 F	LINDE Document &AE-1000-P-LR-1001 Issue 2, Dated 02/20/2023	20041223-PD-661	TO COOLING TOWER [KIEWIT] 5Z-CWS-CTW-01 (PD-662)
TP-009	LINDE STEAM CONDENSATE RETURN	TP-30-04	3092-3020 (C)	&AE-3000-P-FP-0300	CND	Condensate	1,262.5 GPM	1,251.1 GPM	118 PSIA	140 PSIA	276 F	276 F	LINDE Document &AE-1000-P-LR-1001 Issue 2, Dated 02/20/2023	20041223-PD-630	FROM LINDE STEAM DRUMS 10-D3080 AND 20-D3080 AND CONDENSATE PUMPS 10-P3090A/B AND 20-P3090A/B (LINDE STREAM NUMBERS 1092-3012 (A) and 2092-3012 (B))
TP-010	STEAM CONDENSATE TO BARRY CONDENSER HOTWELL	N/A	N/A	N/A	CND	Condensate	1,262.5 GPM	1,251.1 GPM	118 PSIA	140 PSIA	276 F	276 F		20041223-PD-630	
TP-011	DEMIN WATER FROM BARRY CONDENSATE STORAGE TANK	N/A	N/A	N/A	DWS	Demineralized Water	102.4 GPM	67.1 PM	85 PSIA	85 PSIA	65 F	65 F		20041223 PD 710	
TP-012	DEMIN WATER TO TRAIN 10 AND 20 LINDE DEMIN WATER HEADERS AND RECLAIMING UNIT	TP-30-09	3097-1001	&AE-3000-P-FP-0300	DWS	Demineralized Water	102.4 GPM	67.1 PM	85 PSIA	85 PSIA	65 F	95 F	LINDE Document &AE-1000-P-LR-1001 Issue 2, Dated 02/20/2023	20041223-PD-710	RECLAIMING UNIT LINDE TAG # 30-Y7610 (TRAIN 30) - P&ID &AE-3000-P-FP-7600
TP-013A	OILY WATER SEWER FROM LINDE TRAIN 10	N/A	N/A	N/A	PDR	Plant Drains	HOLD	HOLD	HOLD	HOLD	HOLD	HOLD		20041223-PD-921	
TP-013B	OILY WATER SEWER FROM LINDE TRAIN 20	N/A	N/A	N/A	PDR	Plant Drains	HOLD	HOLD	HOLD	HOLD	HOLD	HOLD		20041223 PD 921	
TP-014A	PLANT BARRY DISCHARGE TUNNEL SERVICE WATER SOURCE A	N/A	N/A	N/A	SWS	Service Water	2,716 GPM	2,587 GPM	100 PSIG	0 PSIG	110F	100F		20041223-PD-800	2 x 100% SERVICE WATER PUMPS 6Z-SWS-PMP-01A/01B
TP-014B	PLANT BARRY DISCHARGE TUNNEL SERVICE WATER SOURCE B	N/A	N/A	N/A	SWS	Service Water	2,716 GPM	2,587 GPM	100 PSIG	0 PSIG	110F	100F		20041223-PD-800	2 x 100% SERVICE WATER PUMPS 6Z-SWS-PMP-01A/01B
TP-015	SERVICE WATER TO LINDE TRAIN 10 AND 20 SERVICE WATER HEADERS	TP-30-12	TBV W/LINDE - NOT ON P&ID	&AE-3000-P-FP-0300	SWS	Service Water	126 GPM	120 GPM	150 PSIG	81.5 PSIA	140 F	100 F	LINDE Document &AE-1000-P-LR-1001 Issue 2, Dated 02/20/2023	20041223-PD-801	LINDE SERVICE WATER HEADERS TO LINDE TRAIN 10 AND 20 SERVICE WATER UTILITY STATIONS - P&ID &AE-1000-P-FP-9702
TP-017	POTABLE WATER FROM BARRY	N/A	N/A	N/A	PWS	Potable Water	98.3 GPM	46 GPM	118 PSIG	106 PSIG	105 F	80 F	LINDE Document &AE-1000-A-SE-1001 (F-5) Basis of Process Design, PWS A	20041223 PD 810	
TP-018	POTABLE WATER TO LINDE POTABLE WATER HEADER	TP-30-08	3095-1001	&AE-3000-P-FP-0300	PWS	Potable Water	48.3 GPM	46 GPM	58 PSIA	58 PSIA	86 F	86 F	LINDE Document &AE-1000-P-LR-1001 Issue 2, Dated 02/20/2023	20041223-PD-811	POTABLE WATER PUMPS 6Z-PWS-PMP-01A/01B
TP-019	INSTRUMENT AIR TO LINDE INSTRUMENT AIR HEADER	TP-30-10	3093-1001	&AE-3000-P-FP-0300	IA	Instrument Air	187 SCFM	351 SCFM	150 PSIG	104.7 PSIA	125 F	80 F	LINDE Document &AE-1000-P-LR-1001 Issue 2, Dated 02/20/2023 and IA-A/B Calculation prepared 2/6/23	20041223-PD-821	NOT UTILIZING BARRY AIR COMPRESSOR(S), WET AND DRY AIR RECEIVERS AND AIR DRYERS; NEW EQUIPMENT. NO TP FROM/TO PLANT BARRY
TP-020	WASTEWATER TO BARRY DISCHARGE TUNNELS	N/A	N/A	N/A	WW	Wastewater	1,051 GPM	1,051 GPM	145 PSIG	105 PSIG	115 F	86 F		20041223-PD-910	COOLING TOWER BLOWDOWN TO PLANT BARRY DISCHARGE TUNNELS
TP-021	WASTEWATER FROM LINDE WASTEWATER HEADER	TP-30-05	3094-9001	&AE-3000-P-FP-0300	WW	Wastewater	31.3 GPM	31.3 GPM	80 PSIA	60 PSIA	115 F	100 F	LINDE Document &AE-1000-P-LR-1001 Issue 2, Dated 02/20/2023	20041223 PD 911	TO WASTE WATER SUMP 6Z WW SMP 01
TP-023	EGR UNIT A PROCESS CONDENSATE DRAINS	N/A	N/A	N/A	CWS	Circulating Water			NOTE 2					20041223-PD-662	
TP-024	EGR UNIT B PROCESS CONDENSATE DRAINS	N/A	N/A	N/A	CWS	Circulating Water			NOTE 2					20041223-PD-662	
TP-025	PROCESS WATER (CONDENSATE) FROM LINDE PROCESS WATER HEADER	TP-30-06	3094-2001	&AE-3000-P-FP-0300	CND	Condensate	218.7 GPM	278.9 GPM	66 PSIA	66 PSIA	95 F	97 F	LINDE Document &AE-1000-P-LR-1001 Issue 2, Dated 02/20/2023	20041223 PD 641	FROM LINDE DCC COOLERS 10-E1080 and 20-E1080
TP-028	GE UNIT A EGR TO BOP DUCTING TRAIN 6A	N/A	N/A	N/A	FLG	Flue Gas	AW	2,452,737 LB/HR	1.5 PSIG / FV	14.52 PSIA	225 F	210 F		20041223-PD-680	GE IS RESPONSIBLE FOR DESIGN OF EGR SYSTEM
TP-029	GE UNIT B EGR TO BOP DUCTING TRAIN 6B	N/A	N/A	N/A	FLG	Flue Gas	2,452,737 LB/HR	2,452,737 LB/HR	1.5 PSIG / FV	14.52 PSIA	225 F	210 F		20041223-PD-680	GE IS RESPONSIBLE FOR DESIGN OF EGR SYSTEM
TP-032A/B	CWS TO EGR COOLING SYSTEM	N/A	N/A	N/A	CWS	Circulating Water	20,359 GPM	20,359 GPM	145 PSIG	105 PSIG	115 F	86 F		20041223-PD-661	EGR HEAT EXCHANGER 6Z-CWS-HEX-01 AND 6Z-CWS-HEX-02
TP-033A/B	CWS FROM EGR COOLING SYSTEM	N/A	N/A	N/A	CWS	Circulating Water	20,359 GPM	20,359 GPM	145 PSIG	105 PSIG	115 F	103 F		20041223 PD 661	EGR HEAT EXCHANGER 6Z CWS HEX 01 AND 6Z CWS HEX 02
TP-034	CO2 PRODUCT FROM LINDE TRAIN 10 COMPRESSION, DEHYDRATION AND CO2 REMOVAL EQUIPMENT	TP-10.02	1050-2020	&AE-1000-P-FP-0100	CO2	Carbon Dioxide	241,338 LB/HR	237,114 LB/HR	2,450 PSIG	2,215 PSIA	125 F	115 F	LINDE Document &AE-1000-P-LR-1001 Issue 2, Dated 02/20/2023	20041223-PD-670	FROM CO2 COMPRESSOR 10-C5010, STAGE VI AFTERCOOLER 10-E5017
TP-035	CO2 PRODUCT FROM LINDE TRAIN 20 COMPRESSION, DEHYDRATION AND CO2 REMOVAL EQUIPMENT	TP-20.02	2050-2020	&AE-1000-P-FP-0200	CO2	Carbon Dioxide	241,338 LB/HR	237,114 LB/HR	2,450 PSIG	2,215 PSIA	125 F	115 F	LINDE Document &AE-1000-P-LR-1001 Issue 2, Dated 02/20/2023	20041223-PD-670	FROM CO2 COMPRESSOR 20-C5010, STAGE VI AFTERCOOLER 20-E5017
TP-036	FIREWATER FROM BARRY (FIRE LOOP)	N/A	N/A	N/A	FPS	Fire Protection	2,000 GPM	250 GPM	TBD - NEED SOUTHERN PUMP CURVE	TBD - NEED SOUTHERN PUMP CURVE	120 F	105 F		20041223-PD-830	PRESSURE IS DEPENDANT ON SOUTHERN FIRE PUMP CURVE.
TP-037	FIREWATER FROM BARRY (FIRE LOOP)	N/A	N/A	N/A	FPS	Fire Protection	2,000 GPM	250 GPM	TBD - NEED SOUTHERN PUMP CURVE	TBD - NEED SOUTHERN PUMP CURVE	120 F	105 F		20041223 PD 830	PRESSURE IS DEPENDANT ON SOUTHERN FIRE PUMP CURVE.
TP-038	UNIT A HIGH PRESSURE FEEDWATER TO LPS DESUPERHEATER SPRAY	N/A	N/A	N/A	LPS	Low Pressure Steam	TBD	TBD	TBD	TBD	TBD	TBD		20041223-PD-620	FEEDWATER FROM BOILER BLR-80-00A LOW PRESSURE DRUM TO DESUPERHEATER 6Z-DSH-LPS001
TP-039	UNIT B HIGH PRESSURE FEEDWATER TO LPS DESUPERHEATER SPRAY	N/A	N/A	N/A	LPS	Low Pressure Steam	TBD	TBD	TBD	TBD	TBD	TBD		20041223-PD-620	FEEDWATER FROM BOILER BLR-80-00B LOW PRESSURE DRUM TO DESUPERHEATER 6Z-DSH-LPS001
TP-040	CO2 PRODUCT TO PIPELINE	N/A	N/A	N/A	CO2	Carbon Dioxide	241,338 LB/HR	237,114 LB/HR	2,450 PSIG	2,215 PSIA	125 F	115 F		20041223 PD 670	
TP-042A/B	SURFACE WATER FROM LINDE PIT PUMPS	TP-30-07	1072-9020 (A) and 2072-1001 (B)	&AE-3000-P-FP-0300	PDR	Plant Drains	176.6 GPM	176.6 GPM	70 PSIA	58 PSIA	80 F	69 F	LINDE Document &AE-1000-P-LR-1001 Issue 2, Dated 02/20/2023	20041223-PD-920	FROM LINDE PIT PUMPS 10-P7290 (LINDE STREAM NO. 1072-9020 (A)) AND 20-P7290 (LINDE STREAM NO. 2072-1001 (B))
TP-043	PLANT AIR TO LINDE PLANT AIR HEADER	TP-30-11	TBV W/LINDE - NOT ON P&ID	&AE-3000-P-FP-0300	IA	Instrument Air	HOLD	HOLD	HOLD	HOLD	HOLD	HOLD	LINDE Document &AE-1000-P-LR-1001 Issue 2, Dated 02/20/2023	20041223-PD-821	LINDE PLANT AIR HEADER TO LINDE PLANT AIR UTILITY STATIONS - P&ID &AE-3000-P-FP-0300

Notes:
1) Design rate divided annual consumption provided by Linde by 7446 operating hours per year; rounded to next whole integer.
2) Per GE
3) Dated 02.22.2023
4) A = Train 10, B = Train 20 and C = Train 30
5) TBV = To Be Verified

REV	DATE		DESCRIPTION	APVD	DAN
0	4/14/2023		Issued for FEED	AWD	DAN
A	2/15/2023		Issued for Review	DAH	DB

REV	DOCUMENT NUMBER
0	20041223-MTP-001

2.4.10 OSBL Electrical Equipment List

The OSBL Electrical Equipment List Revision 0 dated 04/21/2023 is available in Appendix Q. This document was produced by Kiewit and provides information on the following equipment:

- Transformer
- Switchgear
- Motor control center
- Cable bus
- Battery charger
- Battery
- Disconnect switch
- Power panel
- UPS
- DCS cabinet
- Network cabinet
- Heat trace panel

2.4.11 OSBL Electrical Load List

The OSBL Electrical Load List Revision 1 dated 04/21/2023 is available in Appendix R. This document was produced by Kiewit and provides information on the following equipment:

- 15kV switchgear
- 5kV switchgear
- Low voltage switchgear
- Low voltage motor control centers

2.4.12 OSBL Electrical Engineering Standards and Symbols

The OSBL Electrical Engineering Standards and Symbols Revision 0 dated 03/14/2023 is available in Appendix S. This drawing was produced by Kiewit.

2.4.13 OSBL Overall Electrical One-Line Diagram

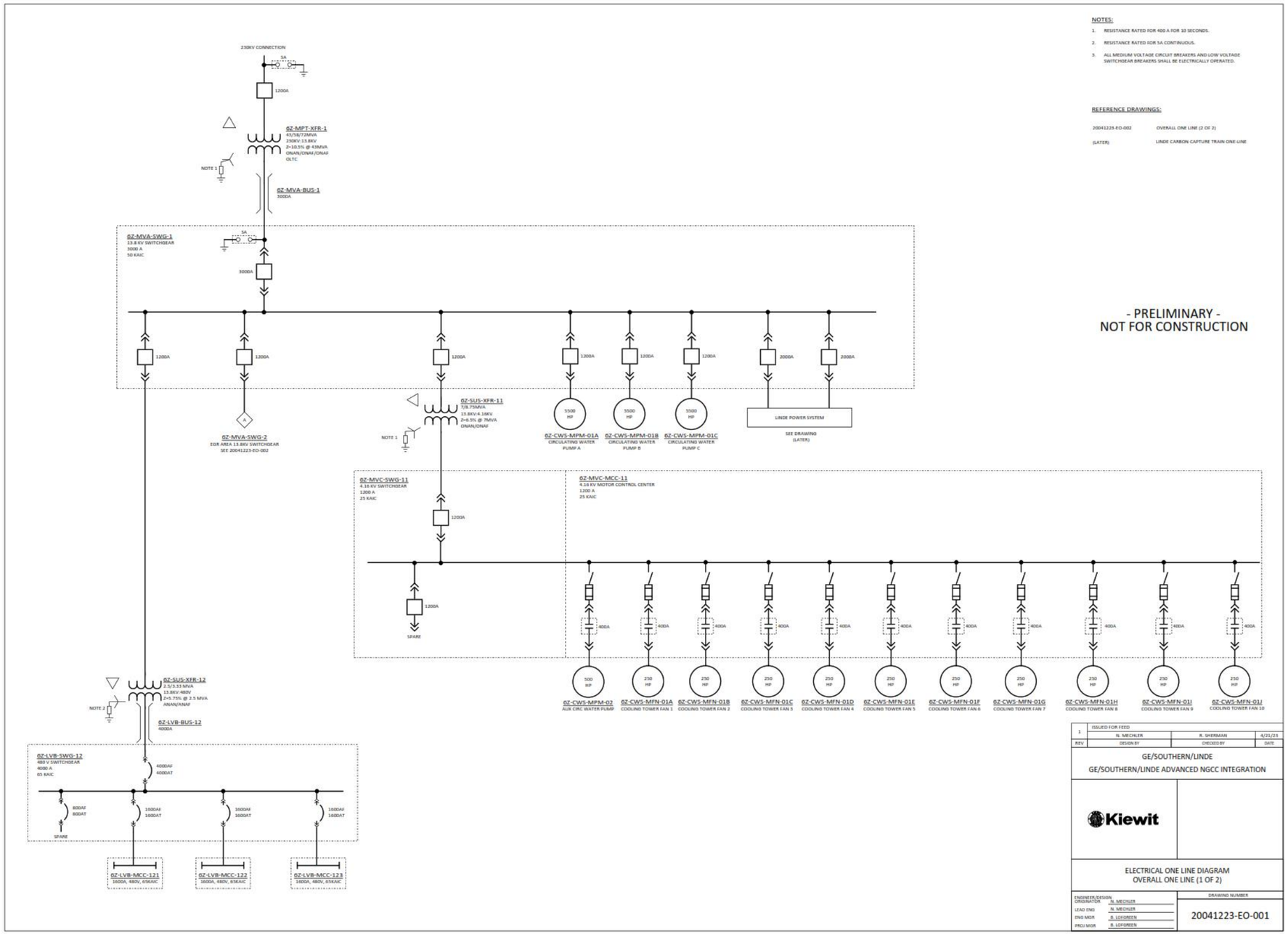

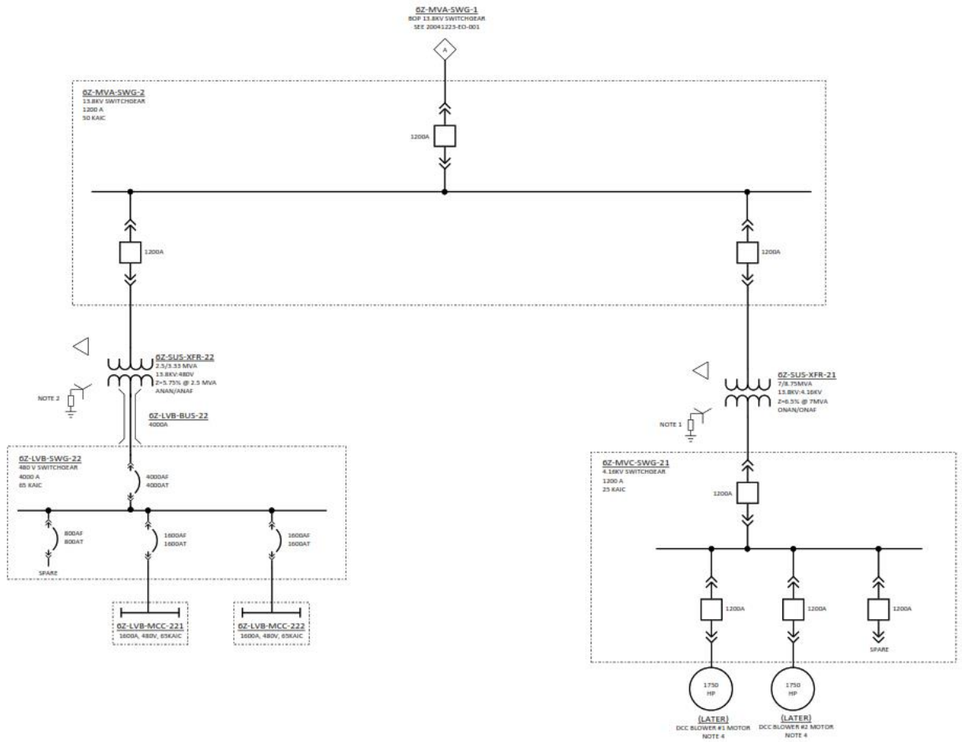

NOTES:

1. RESISTANCE RATED FOR 400 A FOR 10 SECONDS.
2. RESISTANCE RATED FOR 5A CONTINUOUS.
3. ALL MEDIUM VOLTAGE CIRCUIT BREAKERS AND LOW VOLTAGE SWITCHGEAR BREAKERS SHALL BE ELECTRICALLY OPERATED.
4. MOTOR SUPPLIED BY GE.

REFERENCE DRAWINGS:

20041223-EO-001	OVERALL ONE LINE (1 OF 2)
(LATER)	LINDE CARBON CAPTURE TRAIN ONE-LINE

- PRELIMINARY -
NOT FOR CONSTRUCTION

REV	DESIGN BY	CHECKED BY	DATE
1	ISSUED FOR FEED		
	N. MECHLER	R. SHERMAN	4/21/25

GE/SOUTHERN/LINDE
GE/SOUTHERN/LINDE ADVANCED NGCC INTEGRATION

Kiewit

ELECTRICAL ONE LINE DIAGRAM
OVERALL ONE LINE (2 OF 2)

ENGINEER/DESIGN ORIGINATOR	N. MECHLER
LEAD ENG	N. MECHLER
ENG MGR	B. LOFGREEN
PROJ MGR	B. LOFGREEN

DRAWING NUMBER
20041223-EO-002

2.4.14 OSBL 230-13.8 kV Substation One-Line Diagram

The OSBL 230-13.8 kV Substation One-Line Diagram Revision 0 dated 04/26/2023 is available in Appendix T. This drawing was produced by Kiewit.

2.4.15 OSBL 125 VDC Electrical One-Line Diagram

The OSBL 125 VDC Electrical One-Line Diagram Revision A dated 03/10/2023 is available in Appendix U. This drawing was produced by Kiewit.

2.4.16 OSBL Plant UPS Electrical One-Line Diagram

The OSBL Plant UPS Electrical One-Line Diagram Revision 0 dated 04/21/2023 is available in Appendix V. This drawing was produced by Kiewit.

2.4.17 OSBL Overall Communication Diagram

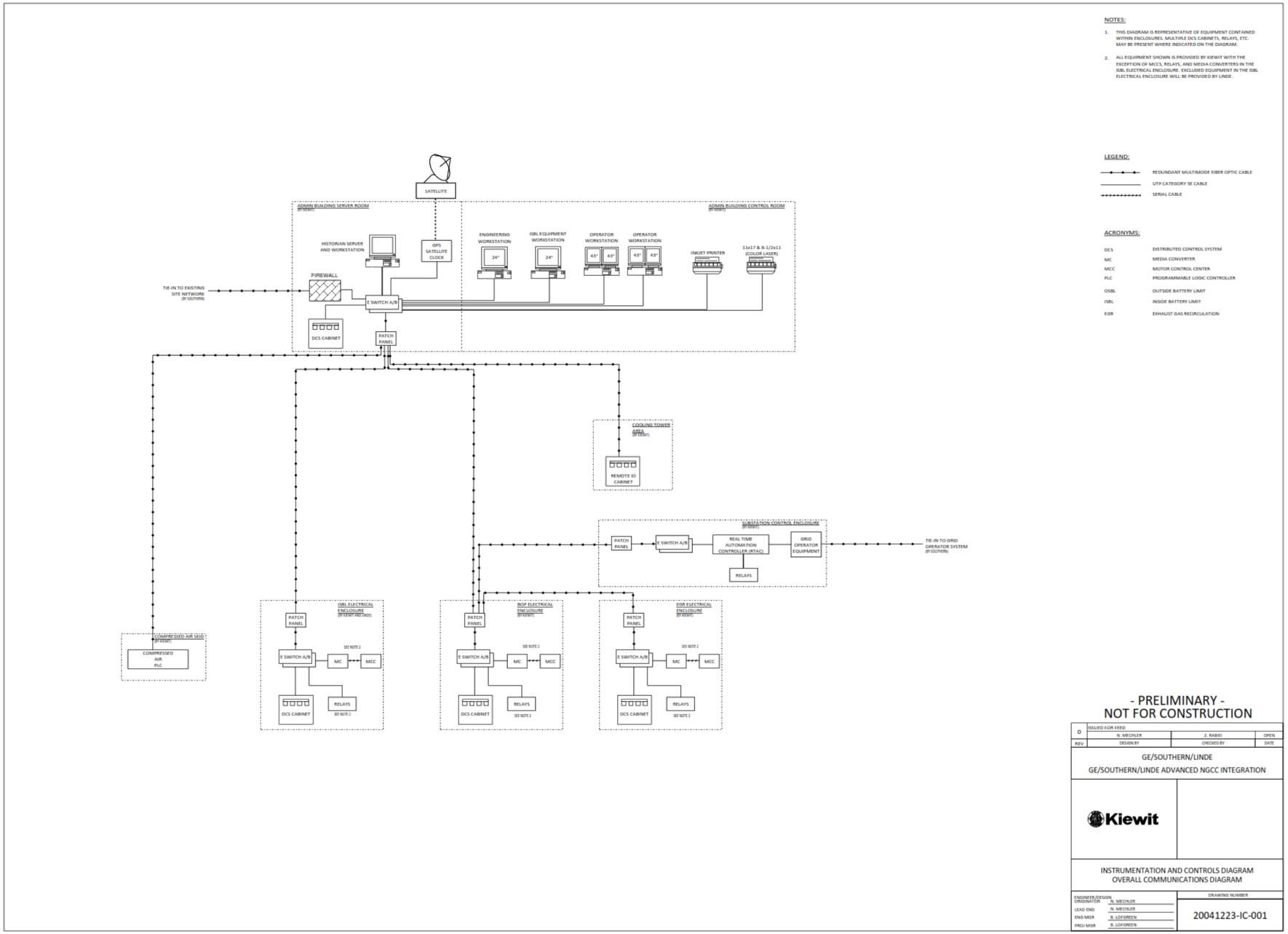

2.4.18 OSBL/ISBL Crane Lifting Plan

A large crane will be required for the setting of the OSBL cooling tower and the entire ISBL.

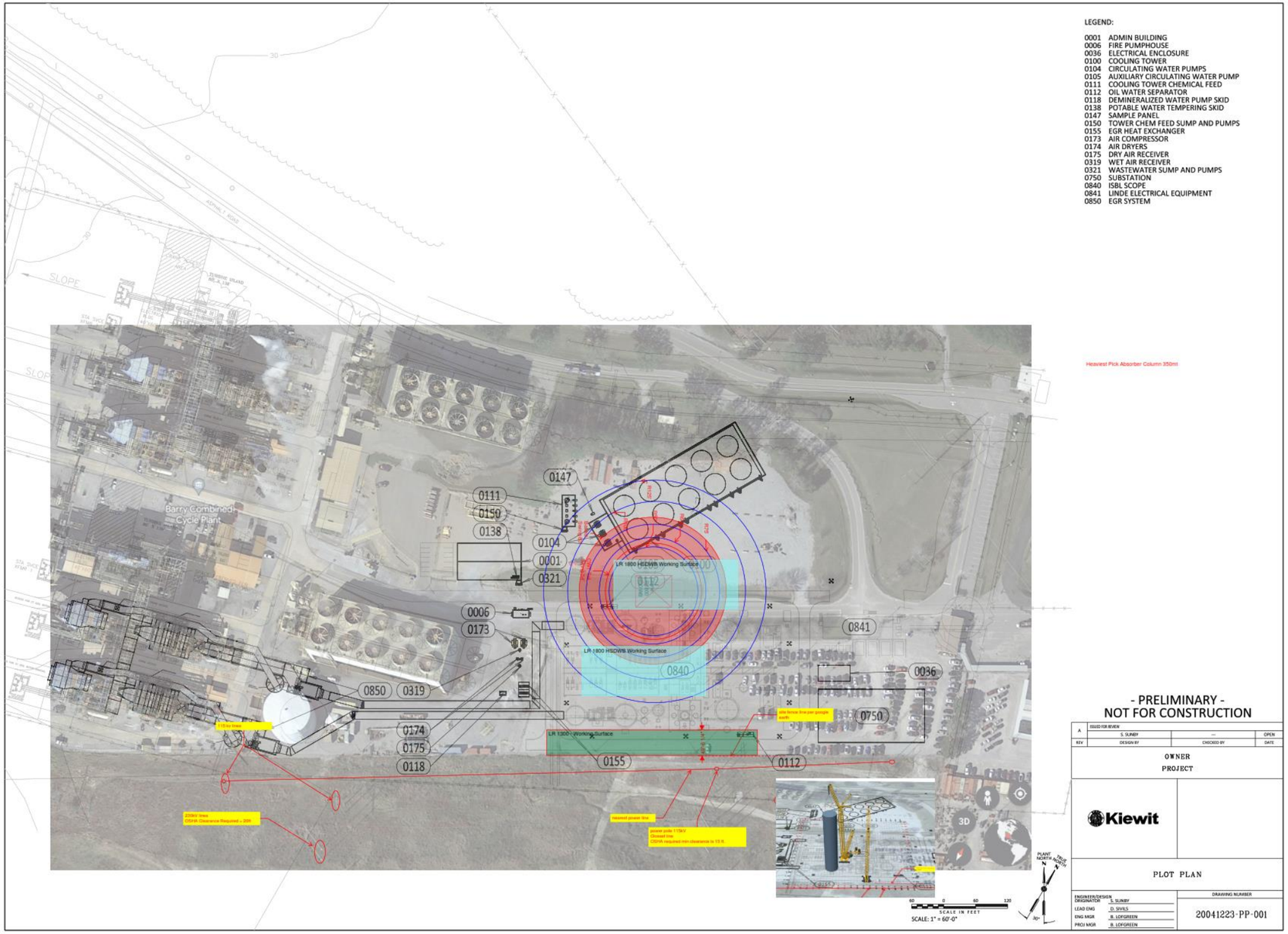

2.4.19 OSBL/ISBL Transportation Plan

Since the CCS includes large vessels and structures that require transport through the existing Plant Barry site, a detailed transportation study dated 07/27/2023 was performed by Barnhart Crane. This study is available starting on the following page.

Summary of Study Inputs

The dimensions in Table 20 were used for the study. For the final location of each item, see the drawings in Sections 2.3.5 and 2.3.6.

Description	Diameter, feet [meters]	Length / Height, feet [meters]	Weight, tonnes (Provided for Heaviest Vessels Only)
Activated Carbon Filter (10-A3075A/B)	12.14 [3.7]	31.17 [9.5]	---
Rich Solution Flash Vessel (10-D3040)	20.93 6.38]	65.62 [20]	---
Stripper Reflux Drum (10-D3060)	9.51 [2.9]	45.93 [14]	---
Solution Storage Tank (10-D7210)	42.52 [12.96]	45.93 [14]	---
Solution Make-up Vessel (20-D7250)	16.4 [5]	69.55 [21.2]	---
Stripper Reboiler (10-E3070A/B/C/D/E/F)	9.51 [2.9]	19.69 [6]	---
DCC Column (10-T1010)	36.09 [11]	108.27 [33]	120
Absorber Column (10-T2010)	42.09 [12.83]	229.66 [70]	350
Stripper Column (10-T3010)	18.31 [5.58]	131.23 [40]	---

Table 20: Dimensions Used for On-Site Transportation Study

Summary of Study Results

Several options were evaluated, but the only route that can be used with confidence passes across the existing site and under many power lines. For equipment to be transported across the site on existing roads and bridges, it needs to meet the following limits:

- Height – Limit is 30 ft (from top of deck, limited by required clearance to overhead power lines)
- Weight – Limit is 300,000 lbs (limited by existing bridge at site)
- Length – Pieces ~ 220 ft in length can be maneuvered through the plant with minimal issues

BARNHART

Plant Barry Carbon Capture

Plant Barry, Bucks, AL

Barnhart Route Study
Prepared for:

Kiewit

7-27-2023



BARNHART

Contents

Option 1 4
Barge Roll Option 1 4
Limitations for Option 1 4
Improvements Needed. 4
Port of Mobile 4
Route Overview 5
Next Steps 5
Option 2 6
Barge Roll Off Option 2 6
Limitations for Option 2 6
Improvements needed 6
Route Overview 7
Next Steps 7
Option 3 8
Barge Roll Off Option 3 8
Limitations for Option 3 8
Improvements needed 8
Route Overview 9
Next Steps 9
Comments 10
Considerations 10
Port of Mobile 11

Project Contacts

Barnhart
Cade DuBois

Kiewit
Matt Daniels
Bryan Lofgreen

BARNHART

Kiewit

Purpose of Study

The purpose of this study is to analyze transport of Absorber and DCC equipment from barge at Plant Barry dock or other site locations to be transported to the proposed laydown area. The initial equipment's weights and dimensions of 45'x45'x225' (lwh) weighing 771,751 lbs., was used to determine if an existing route at the facility could be used to transport this dimension of equipment.

The study identifies preliminary routing believed to be suitable for onsite transportation of equipment. Along with the limitations of equipment sizes for each route given.

In this study we will provide three options for transportation with the information of how it was determined.

Option 1: Receive components via barge at Plant Barry using SPMT transporter. Utilizing existing roads at the facility to deliver to the laydown area.

Option 2: Receive components via barge at Plant Barry using a newly constructed roll off location. That would be after the demolishment of coal conveyor structure. A new heavy haul road constructed to deliver components to the laydown area.

Option 3: Receive components via barge at Plant Barry using a new roll off location that would bypass the option of needing to remove the existing conveyor structure.



Option 1

Barge Roll Option 1

Barnhart has done a route study at Plant Barry to determine the most efficient way to receive equipment via Roll on Roll off operations with minimal impact of existing property. Utilizing the existing roll off location.

Through our study we have compiled information from previous work done by Barnhart similar to the requested scope. We have taken field measurements for obstructions to determine dimensional limitations for transporting equipment through the facility. We have met with Plant Barry personnel to assist with information on these limitations.

Limitations for Option 1

1. Largest dimensions for a singular piece are 30'x30'x225' (LxWxH)
    a. Height restriction due to overhead powerlines with the lowest being 35'.
2. The Bridge that travels along switch (Location 7) yard has a 300,000 lb. limit.

Improvements Needed.

a. Location 3 has temporary office trailers that can be moved as needed.
b. Location 4 will need l civil improvements and/or matting for transporter route.
c. Location 5 will need civil improvements and/or matting for transporter route.
d. Location 7 will need civil improvements and/or matting for transporter route.
e. Location 8 will need civil improvements and/or matting for transporter route.
f. Location 9 will need to have fence and guard post removed for transporter route.
g. Location 10 will need civil improvements and/or matting for transporter route.

Port of Mobile

a. Has mobile crane capabilities of 110 tons.
b. The DB Arapaho is a port location derrick crane with 800 tons capacity.
c. Port has 2.4 million square feet of laydown area.
d. Has truck, barge, and rail connectivity.
e. 31 Nautical miles from the port.

Route Overview



Next Steps

a. Design and Capabilities meeting between EPC and Barnhart.
b. Engineered plans for how components should be loaded at Manufacturer, so Barnhart can utilize roll off method.
c. Procurement of Port of Mobile use agreement.
d. Meeting between EPC and manufacturer on dimension specifications on allowed dimensions and mass.
e. Project estimate proposal for Engineering deliverables, equipment, and execution of work.

Option 2

Barge Roll Off Option 2

Upon meeting with Plant Barry personnel, information was shared that the decommissioning of the existing coal side of the facility could begin before the new Carbon Capture facility begins. With this information Barnhart preceded to begin a route study with the knowledge obtained.

The the study for Option 2 included Barnhart onsite taking field measurements and surveying route options. This option would include the removal of existing structures. The benefits would allow for the manufacturing of larger dimensional and mass components that can be received from barge and transported on site with the limitations of the existing bridge and the 35' power lines.

Limitations for Option 2

Road 1:

1. Dimensions for the initial equipment of 45'x45'x225' (LxWxH) at 771,750 lbs would be permitted.
2. Height restriction due to overhead power lines would be 45'.

Road 2:

1. Dimensions for the initial equipment of 45'x45'x225' (LxWxH) at 771,750 lbs would be permitted.
2. Height restriction due to overhead power lines would be 45'.

Improvements needed

Road 1:

1. Location 1 existing structure will need to be removed for new RORO site.
2. Location 1, a new barge roll off ramp will need to be constructed to allow transporter to travel with load to laydown area.
3. Location 2 will need l civil improvements and/or matting for transporter route.
4. Location 3 will need l civil improvements and/or matting for transporter route.
5. Location 4 will need civil improvements to widen the road south to gain distance from the building to allow for 45' width to pass.
6. Location 5 will need l civil improvements and/or matting for transporter to enter the laydown area.

Road 2:

1. Location 1's existing structure will need to be removed by others prior to receiving barge and equipment.
2. Location 1, a new barge roll off ramp will need to be constructed to allow transporter to travel with load to laydown area.
3. Civil improvements of building a new heavy haul road that is sufficient in handling the weight of the transporter and loaded equipment.
4. Removal of existing trees to allow road to laydown area.

BARNHART

Route Overview

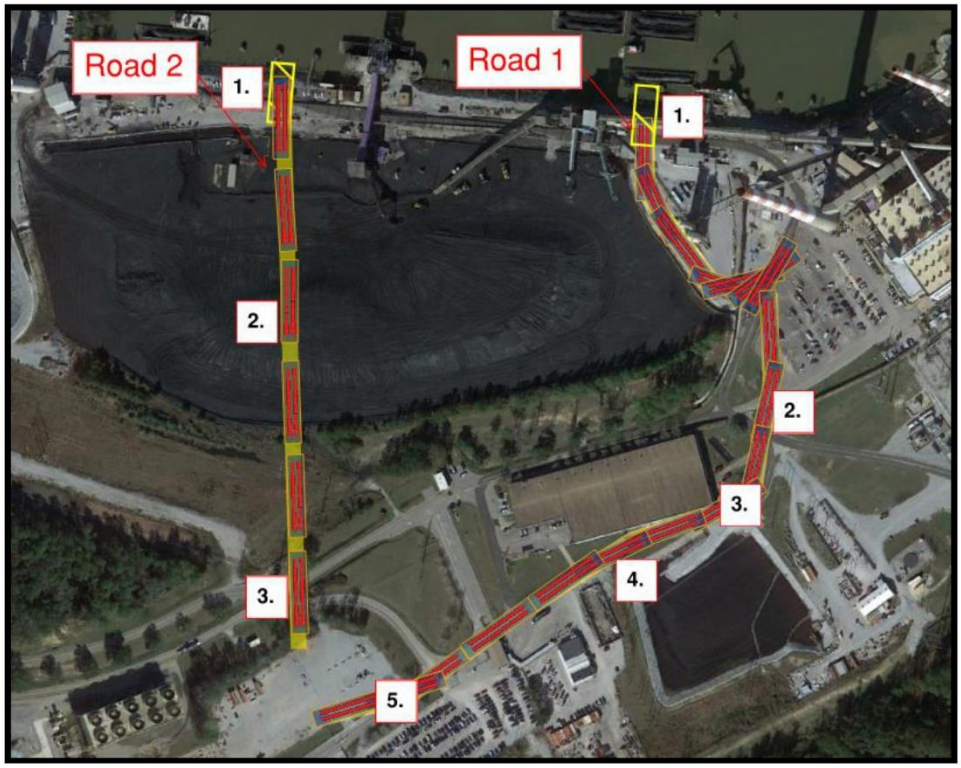

Next Steps

a. Meeting with EPC and Plant Owner to determine if the demolition of the conveyor and equipment will be scheduled for the removal to prior of the project.
b. Project estimate on cost of new heavy haul road.
c. Meeting between EPC and manufacturer on dimension specifications on allowed dimensions and mass.
d. Project estimate proposal for Engineering deliverables, equipment, and execution of work.

BARNHART

Option 3

Barge Roll Off Option 3

During the study for Option 2, the route was discovered for a possible third roll off location. This route would require the least amount of existing structure to be removed but, extensive improvements for the roll off location.

The study for Option 3 included Barnhart onsite taking field measurements and surveying route options. This option would include the removal of existing structures but less than option 2. The proposed roll off area would involve land clearing but should not need the amount of work as Option 2. The benefits would allow for the manufacturing of larger dimensional and mass components that can be received from barge and transported on site with the limitations of the existing bridge and the 35' power lines.

Limitations for Option 3

1. Dimensions for the initial equipment of 45'x45'x225' (LxWxH) at 771,750 lbs would be permitted.
2. Height restriction due to overhead power lines would be 45'.

Improvements needed

Road 1:

1. Location 1 would involve the most land clearing between Option 2 and Option 3.
2. Location 1, a new barge roll off ramp will need to be constructed to allow transporter to travel with load to laydown area.
3. Location 2 will need l civil improvements and/or matting for transporter route.
4. Location 3 will need existing equipment/structures and/or the road widened to allow transporter with components to pass through.
5. Location 4 will need civil improvements to widen the road and/or make improvements to allow loads from transporter and components to pass over.
6. Location 5 will need l civil improvements and/or matting for to continue along path to laydown area.
7. Location 6 will need a heavy haul road constructed to laydown area.
8. Location 7 will need land clearing along with civil improvements and or matting to proceed to lay down area.

BARNHART

Route Overview

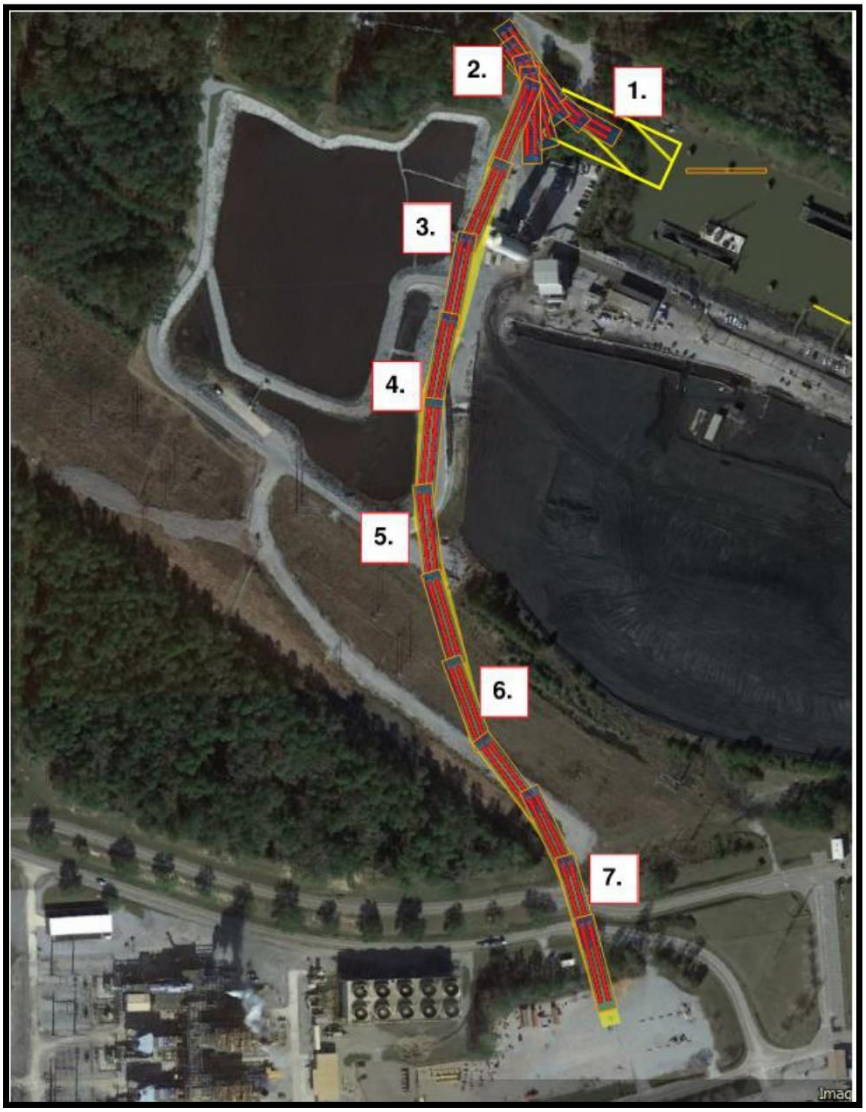

Next Steps

a. Meeting with EPC and Plant Owner to determine if the demolition of the conveyor and equipment will be scheduled for the removal to prior of the project.
b. Project estimate on cost of new heavy haul road.
c. Meeting between EPC and manufacturer on dimension specifications on allowed dimensions and mass.
d. Project estimate proposal for Engineering deliverables, equipment, and execution of work.

BARNHART

Comments

Considerations

(1) Recommended for barge RORO at Plant Barry site.
(2) An over the road option would be along the lines of Option 1's dimensions and mass for transport. The bridges shown below would be difficult to get permits according to the AL DOT.
    (i) Bridge jumpers would not have efficient length to cover the bridge distance.
    (ii) A temporary bridge would involve approval from the AL DOT and Core of Engineers
    (iii) This process would need to be started early for approval process.
    (iv) AL DOT has stated that if its possible to barge it, that will be the recommend choice.



BARNHART

Port of Mobile

- Has mobile crane capabilities of 110 stons
- The DB Arapaho is a port location derrick crane with 800 stons capacity.
- Port has 2.4 million square feet of laydown area.
- Has truck, barge, and rail connectivity.
- 31 Nautical miles from the port.



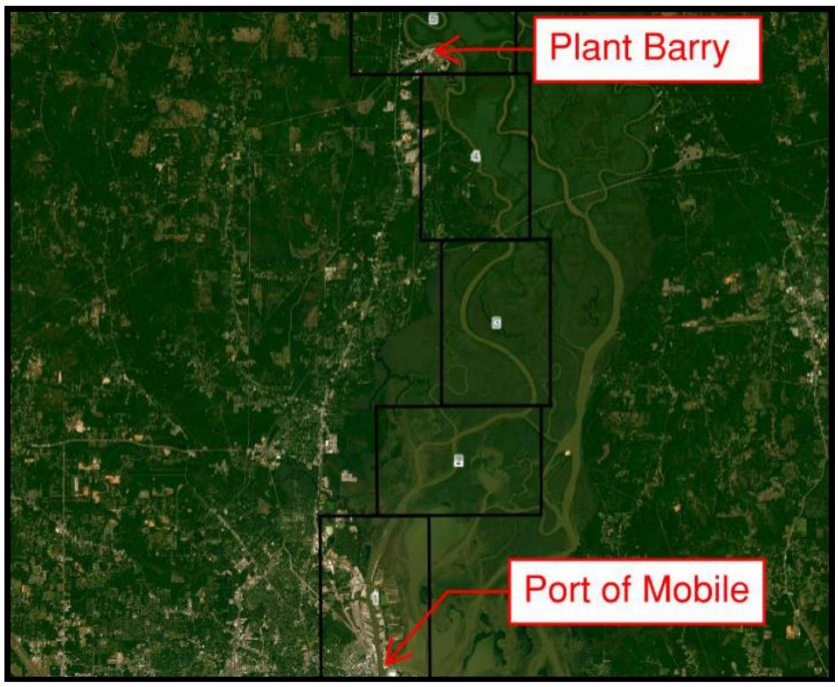

2.4.20 OSBL Electrical System Analysis

The OSBL Electrical System Analysis Revision 0 dated 04/21/2023 is available in Appendix W. This document was produced by Kiewit and provides an analysis to verify that the designed electrical power distribution system will perform properly and safely under normal and abnormal plant conditions. The analysis concludes that the power system will operate as expected under the examined conditions.

2.4.21 OSBL DC Battery and UPS Calculations

The OSBL DC Battery and UPS Calculations Revision 0 dated 04/21/2023 are available in Appendix X. This document was produced by Kiewit and provides calculations for battery size and charger size.

2.4.22 OSBL Grounding Study

The OSBL Grounding Study Revision A dated 05/12/2023 is available in Appendix Y. This document was produced by Kiewit and establishes the ground grid design needed to both ensure personnel safety from harmful step and touch potentials in the event of fault conditions and to successfully meet the project contract requirements for NGCC+CCS integration. The analysis concludes that the grounding grid will safely provide a means to dissipate electrical currents into the earth without exceeding operating and equipment limits and will assure that the site personnel are not exposed to the danger of critical electric shock.

2.4.23 OSBL Cable Ampacity Study

The OSBL Ampacity Study Revision A dated 04/21/2023 is available in Appendix Z. This document was produced by Kiewit and establishes the sizing criteria for power cables.

2.4.24 OSBL Mechanical Design Criteria

OSBL Mechanical Design Criteria Revision 0 dated 03/22/2023 is available in Appendix AA. This document was produced by Kiewit and defines the design criteria for the mechanical systems for the project (excluded are design requirements for plumbing and HVAC of the buildings at the facility).

2.4.25 OSBL Electrical Design Criteria

The OSBL Electrical Design Criteria Revision 0 dated 02/27/2023 is available in Appendix BB. This document was produced by Kiewit and establishes the guidelines for the engineering and design work required for the electrical discipline for the primary electrical equipment and systems that will comprise the project. It describes the equipment functions and the criteria for design basis.

2.4.26 OSBL Site Geotechnical Guidance

The OSBL Site Geotechnical Guidance Revision 0 dated 03/20/2023 is available in Appendix CC. This memorandum was produced by Kiewit and provides the geotechnical basis for the estimate. The primary geotechnical risk for this estimate stems from the absence of exploration in the planned construction area. Conditions different from those assumed, particularly with respect to soft and organic soils, will have an appreciable impact on cost and schedule. A final geotechnical study is necessary to verify and/or modify the findings of this baseline geotechnical report.

2.4.27 OSBL Structural Design Criteria

The OSBL Structural Design Criteria Revision 0 dated 03/20/2023 is available in Appendix DD. This document was produced by Kiewit and provides requirements for structural engineering and design including applicable industry codes and standards, geotechnical guidance, structural design loads, recommended practices for deep foundations and ground improvements, design and placement of structural concrete, and design requirements for steel framed structures.

2.4.28 OSBL Wire and Cable Specification

The OSBL Wire and Cable Specification Revision 0 dated 03/02/2023 is available in Appendix EE. This document was produced by Kiewit.

2.4.29 OSBL DC System Specification

The OSBL DC System Specification Revision 00 dated 05/05/2023 is available in Appendix FF. This document was produced by Kiewit and provides requirements for the design and performance of the DC system.

2.4.30 OSBL Uninterruptible Power Supply (UPS) Specification

The OSBL Uninterruptible Power Supply (UPS) Specification Revision 00 dated 05/05/2023 is available in Appendix GG. This document was produced by Kiewit and provides both the technical and general requirements for the UPS.

2.4.31 OSBL Electrical Enclosures Specification

The OSBL Electrical Enclosures Specification Revision 0 dated 05/05/2023 is available in Appendix HH. This document was produced by Kiewit and provides both the technical and general requirements for electrical enclosures.

2.4.32 OSBL Cable Bus Specification

The OSBL Cable Bus Specification Revision 0 dated 05/05/2023 is available in Appendix II. This document was produced by Kiewit and provides both technical and general requirements for the cable bus.

2.4.33 OSBL DCS Specification

The OSBL DCS Specification Revision 0 dated 04/28/2023 is available in Appendix JJ. This document was produced by Kiewit and provides both the technical and general requirements for the DCS.

2.4.34 OSBL Main Power Transformer Specification

The OSBL Main Power Transformer Specification Revision 0 dated 04/28/2023 is available in Appendix KK. This document was produced by Kiewit and provides both the technical and general requirements for the main power transformer.

2.4.35 OSBL Secondary Unit Substation Transformers Specification

The OSBL Secondary Unit Substation Transformers Specification Revision 0 dated 04/28/2023 is available in Appendix LL. This document was produced by Kiewit and provides both technical and general requirements for the secondary unit substation transformers.

2.4.36 OSBL Substation Electrical Enclosure Specification

The OSBL Substation Electrical Enclosures Specification Revision 0 dated 04/28/2023 is available in Appendix MM. This document was produced by Kiewit and provides both the technical and general requirements for the substation electrical enclosure.

2.4.37 OSBL Substation Circuit Breakers Specification

The OSBL Substation Circuit Breakers Specification Revision 0 dated 04/28/2023 is available in Appendix NN. This document was produced by Kiewit and provides both the technical and general requirements for the substation circuit breakers.

2.4.38 OSBL Substation Outdoor Equipment Specification

The OSBL Substation Outdoor Equipment Specification Revision 0 dated 04/28/2023 is available in Appendix OO. This document was produced by Kiewit and provides both the technical and general requirements for substation outdoor equipment.

2.4.39 OSBL Metal Buildings Specification

The OSBL Metal Buildings Specification Revision 0 dated 07/27/2023 is available in Appendix PP. This document was produced by Kiewit and provides the detailed requirements for metal buildings.

2.4.40 Constructability Review

The Constructability Review Revision 0 dated 8/11/2023 is available below. This document was produced by Kiewit and includes information such as the on-site work required, tie in points, and construction sequencing.

Kiewit

ADVANCED NGCC DE-FE-0032131
CONSTRUCTABILITY REPORT

REV	DATE	Description	ORIG	CHK	APPR
0	8/11/23	Issued for FEED	MD	RF	BL

PROJECT	DOCUMENT NUMBER	REVISION
GE/Southern CCS	20041223-RPT-001	0

KIEWIT ENGINEERING GROUP INC. | 8900 RENNER BOULEVARD | LENEXA, KANSAS 66219

Table of Contents

1.0 INTRODUCTION: 3
2.0 SITE WORK 3
2.1 SITE PREPARATION 3
2.2 TRENCHING AND EXCAVATION 3
2.3 BACKFILLING 4
2.4 GRADING 4
2.5 ROADS AND PARKING 4
2.6 LAYDOWN AREAS 5
2.7 TEMPORARY WAREHOUSE STORAGE 5
2.8 TEMPORARY CONSTRUCTION TRAILERS 6
3.0 TIE IN POINTS 6
3.1 EXISTING PLANT INTERFACE POINTS 6
3.2 FLUE GAS DUCT TIE IN 6
3.3 RAW WATER TIE IN 6
4.0 CONSTRUCTION SEQUENCING: 7
4.1 ISBL – CARBON CAPTURE ISLAND 7
4.2 PIPING 8
4.3 EQUIPMENT 8
4.4 ELECTRICAL 9
4.5 CONSTRUCTION SUBCONTRACTS 9

1.0 INTRODUCTION:

As part of the FOA2515 GE/Southern/Linde Advanced NGCC Integration FEED Study Kiewit looked at the installation of Linde Carbon Capture Island, the tie-in into the GE flue gas ductwork, the tie-in into the Steam Turbine as well as the supporting infrastructure.

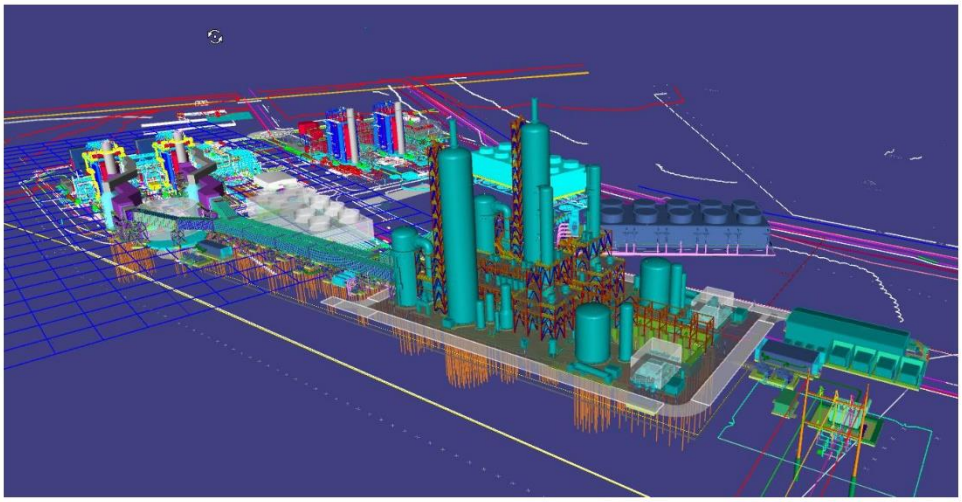

2.0 SITE WORK

The new carbon capture facility is to be constructed on the existing power generating station site. The new carbon capture ductwork system will be connected to the existing power generation HRSG stacks and routed to the new carbon capture facility.

2.1 SITE PREPARATION

Kiewit Construction will be responsible for clearing all trees, shrubs, and vegetation to the extent necessary to construct the new facility and support construction activities. For the site proper, Kiewit Construction will also be responsible for demolition of existing buildings/structures.

2.2 TRENCHING AND EXCAVATION

Excavation work will consist of the removal of earth, sand, gravel, vegetation, organic matter,

rock, boulders, and debris, etc. to the lines and grades necessary for construction of foundations and underground utilities.

Joint trenching (or common trenching) of underground pipe, electrical duct bank, and temporary construction power will be used to the greatest extent possible to avoid separate excavations and shortened dig durations. As a result, significant cost savings and schedule relief can be realized. Common trenching also makes it easier to locate underground utilities and know where not to dig for future property improvements.

2.3 BACKFILLING

Backfilling will be done in uniform layers of specified thickness in accordance with the project's approved geotechnical report. All off-site soil materials to be used as fill or backfill will be evaluated and properly conditioned in accordance with specifications and current environmental requirements. Density testing will be performed during backfill activities to verify compaction. Backfill sequencing will be planned based on construction area progress and access requirements.

2.4 GRADING

Graded areas will be smooth, compacted, and free from irregular surface changes. Specific elevations will be graded to support crane and heavy haul activities. Kiewit Engineering will coordinate the expected surcharge loadings with the Project Design Engineer for the different types of equipment, vehicles, and cranes. This collaboration will allow the Project Design Engineer to design the necessary ground improvements prior to commencement of construction activities.

2.5 ROADS AND PARKING

New Facility roads will be designed with appropriate clearances to accommodate traffic for construction, operation, and maintenance vehicles. Plant and laydown areas required to support cranes and other mobile equipment access will be provided with adequate bearing capacity to

support expected loads. Crane mats or other materials will be used for additional support based on load size and site conditions at the time of construction.

2.6 LAYDOWN AREAS

Construction laydown areas will be provided on the site proper. These laydown areas will be used for storage, staging, parking, and miscellaneous equipment assembly tasks. Kiewit will require approximately 19 acres of combination on-site and offsite laydown space including the following:

- 5 acres of Craft parking onsite to ensure that bussing of craft is not required, specific locations will be evaluated in the next phase based on determination of available space.
- A centralized location on site (200'x200') will be used for office trailers.
- Craft break locations will be located around the work areas as required.
- Stockpile locations will be located on site.
- Additional areas for onsite tool storage will be located near the shipping and receiving warehouse.
- Onsite fabrication areas will be located to allow for the prefabrication of large volumetric items. This will allow construction normally completed high above grade to be brought down to grade to prioritize safety as well as increase productivity of this work. This will be primarily done for the main ductwork and pipe spooling.
- Remote laydowns will have additional office and craft facilities including craft break areas and restrooms.

2.7 TEMPORARY WAREHOUSE STORAGE

A temporary warehouse structure will be erected in the abandoned contractor parking lot area located north of the current switchyard, adjacent to the future maintenance and electrical shop. The temporary warehouse will be furnished with adequate climate control measures (where required), lights, telephone service, and broadband internet access for receiving and inventory control. The warehouse property will include a receiving area and small laydown yard for outdoor storage. Indoor storage will be reserved for equipment and components that must be protected from the weather, kept dry, or require special

2.8 TEMPORARY CONSTRUCTION TRAILERS

Temporary field office trailers and facilities will be selected to accommodate the minimum number of full-time Kiewit Construction field staff (excludes craft) and Owner Carbon Capture facility staff at any given time through completion of all construction and start-up activities. Each trailer will be provided with adequate heat, air conditioning, lights, toilet facilities, office furniture, at least one (1) conference room and broadband internet access. Field offices will be located close to the site.

3.0 TIE IN POINTS

3.1 EXISTING PLANT INTERFACE POINTS

Refer to GE/Southern/Linde Advanced NGCC Integration Terminal Point List for information regarding the existing plant mechanical and electrical tie-in connections. This information will be used for material take-offs, outage durations, design considerations, and tie-in construction activity planning. All tie points will have the associated connecting system complete as much as possible but at least to an isolation point prior to the tie in being performed. Any connections that require an outage of operations have a scheduled outage which is the period of which the system will have to be shut down and the tie-point location locked out for the work to be performed.

3.2 FLUE GAS DUCT TIE IN

The existing power generation station's flue gas will be redirected to either the new carbon capture facility or existing power generation station's exhaust stack once the flue gas duct modifications are complete. This includes coordinating the existing power generation station's flue gas duct tie-in work and planning the installation and sequencing of the new carbon capture ductwork system. The existing power generation station's exhaust stack ductwork will be modified to allow the redirection of airflow to the new carbon capture facility. Kiewit is planning on using coated carbon steel ducting between GE supplied ductwork and the ISBL.

3.3 RAW WATER TIE IN

We will be installing an intake structure on the discharge canal. The location of this is very congested that will require careful planning. We plan on utilizing sheet pile and compact construction equipment to achieve this.

4.0 CONSTRUCTION SEQUENCING:

4.1 ISBL – CARBON CAPTURE ISLAND

With the high voltage powerlines to the south limiting our access we will build from south to north with the larger items. For equipment that will be shipped complete from the fabricator, such as columns, tank, and modular pipe racks; heavy lift cranes will be utilized to erect the equipment in place. Kiewit will build out the remaining equipment, piping, and structures as work fronts become available with the containment walls being one of the later operations. Absorber and DCC will be provided to site fully shop fabricated with structural internals installed. Process internals and packing will be installed in accordance with manufacturer recommendations.
NOTE: further evaluation is suggested to evaluate crane costs vs delivering absorbers in two (2) sections. We will utilize heavy lift cranes to set the prefabricated components. Access from the south was maximized as much as possible to allow for access with some smaller equipment to install structural steel and interconnecting piping.

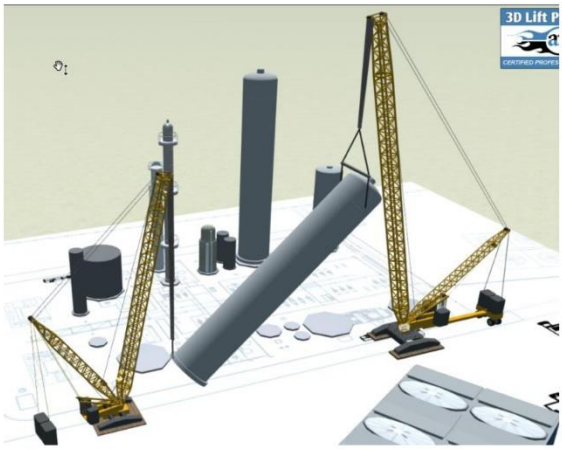

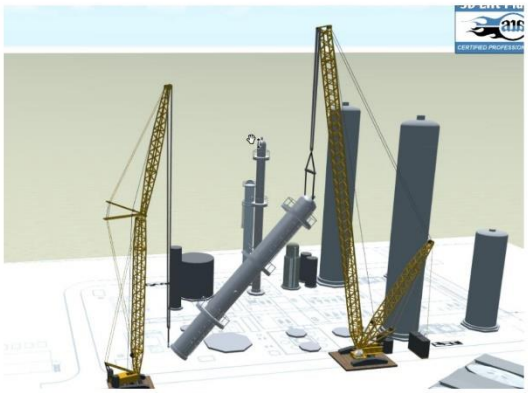

4.2 PIPING

By leveraging technology with Kiewit Construction/Engineering's constructability knowledge, Kiewit Engineering is able to accurately produce detailed piping isometric drawings for both large bore and small-bore piping. The project team and stakeholders use these isometrics for bulk material take-offs, construction planning, fabrication scheduling, and build sequencing. Thus, improving overall project efficiencies and cost by allowing correct construction and resource estimations.

In general, field routed piping will be limited to localized small-bore piping and non-metallic piping systems. Metallic process piping will be prefabricated at an off-site controlled manufacturing environment to the greatest extent possible to minimize on-site logistical challenges, improve quality, reduce material over-runs, improve site safety, and lower construction costs. The prefabricated pipe spools will arrive onsite in a pre-planned delivery sequence that supports site installation need-by dates. Pipe construction sequencing will follow a bottom-up approach in which all underground piping will be delivered and installed first. Once aboveground, piping will be delivered and installed per the construction work area need-by dates outlined in the project's construction schedule.

4.3 EQUIPMENT

Skid-mounted equipment systems will be used to the greatest extent possible on this project in lieu of a stick-build approach. Modularizing the equipment scope allows the

process connections and equipment components to be designed, fabricated, and installed on a skid (frame) in a controlled environment at an offsite manufacturing facility. The packaged equipment will be transported to site as a complete unit and easily tied into the balance of plant mechanical and electrical process connections. This approach reduces construction costs by improving safety, construction schedule, build sequence planning, design efficiencies, and quality control.

4.4 ELECTRICAL

A substantial portion of the cable is designed to route underground in duct bank. This scope will be completed along with civil scope. Early sequencing of these activities will enable cable pull to be completed in full routes once aboveground raceway is installed and full cable routes are available. Coordination with the civil group will be key to reach proper bury depth, verify proper care and awareness to completely avoid cable damage, and perform the correct tests with hold point signoffs prior to any burying of cables. As the project moves above ground the focus will be on installation of the main electrical buildings, transformers, panels, and electrical rooms to facilitate the pulling of home runs radiating from the PDC's. Even in the scenario where a vendor delay is incurred on the enclosures, work will begin on raceway and underground duct bank upon significant completion of the steel infrastructure and civil trenching work, respectively. Constant coordination and communication with all disciplines is required to sequence this work efficiently.

4.5 CONSTRUCTION SUBCONTRACTS

4.5.1 COOLING TOWER

Kiewit will execute the mechanical work with a supply and erect contractor for the Cooling Tower. While the concrete, electrical, and remaining mechanical will be performed by Kiewit, the Cooling Tower supports, risers, and all internals will be completed by the subcontractor's on-site craft.

4.5.2 ADMIN BUILDING

Kiewit will subcontract the supply and erection of the administration building.

2.4.41 OSBL Subcontractor List

Buildings GC

- Byrd Inc. / Tweet / Garot Mechanical, Inc. (HVAC Only)
- Energy Link Corporation
- MBA Energy & Industrial, LLC
- Patterson Horth, Inc.

Circulating Water Pumps

- Flowserve
- Pentair
- Sulzer/ Johnston
- Torishima
- Xylem AC Custom

Compressed Air System

- Atlas Copco
- Gardner Denver
- Ingersoll Rand
- Rogers Machinery / Kobelco
- UE Compression

Cooling Tower

- Cooling Tower Depot
- EvapTech
- ICT - International Cooling Tower
- Karrena USA
- SPX

Heat Exchangers - Plate & Frame

- Alfa Laval
- API Heat Transfer
- GEA
- SPX Flow
- Tranter
- WCR

PDC - Electrical Enclosure

- Cape Electric
- ESS Metron
- Point Eight
- Rensenhouse
- Broken Arrow

Substation

- Border States
- Valmont
- Dis-Tran
- WESCO Hamby

SUS Transformers

- ABB (Hitachi Energy)
- Alstom
- Cooper
- Hyundai (America)
- Niagara Transformers
- Pennsylvania Transformers
- Siemens Energy Inc.
- Virginia Transformer
- Waukesha

Unit Auxiliary Transformer (UAT)

- ABB (Hitachi Energy)
- Alstom
- Cooper
- Hyundai (America)
- Niagara Transformers
- Pennsylvania Transformers
- Siemens Energy Inc.
- Virginia Transformer
- Waukesha

2.4.42 OSBL Details of Equipment and Module Foundations

The primary OSBL foundations include the substation main transformer, substation building, SUS transformers, CCS cooling tower basin, sump, and pump well. See Figure 9 and Table 21 for layout and sizes.

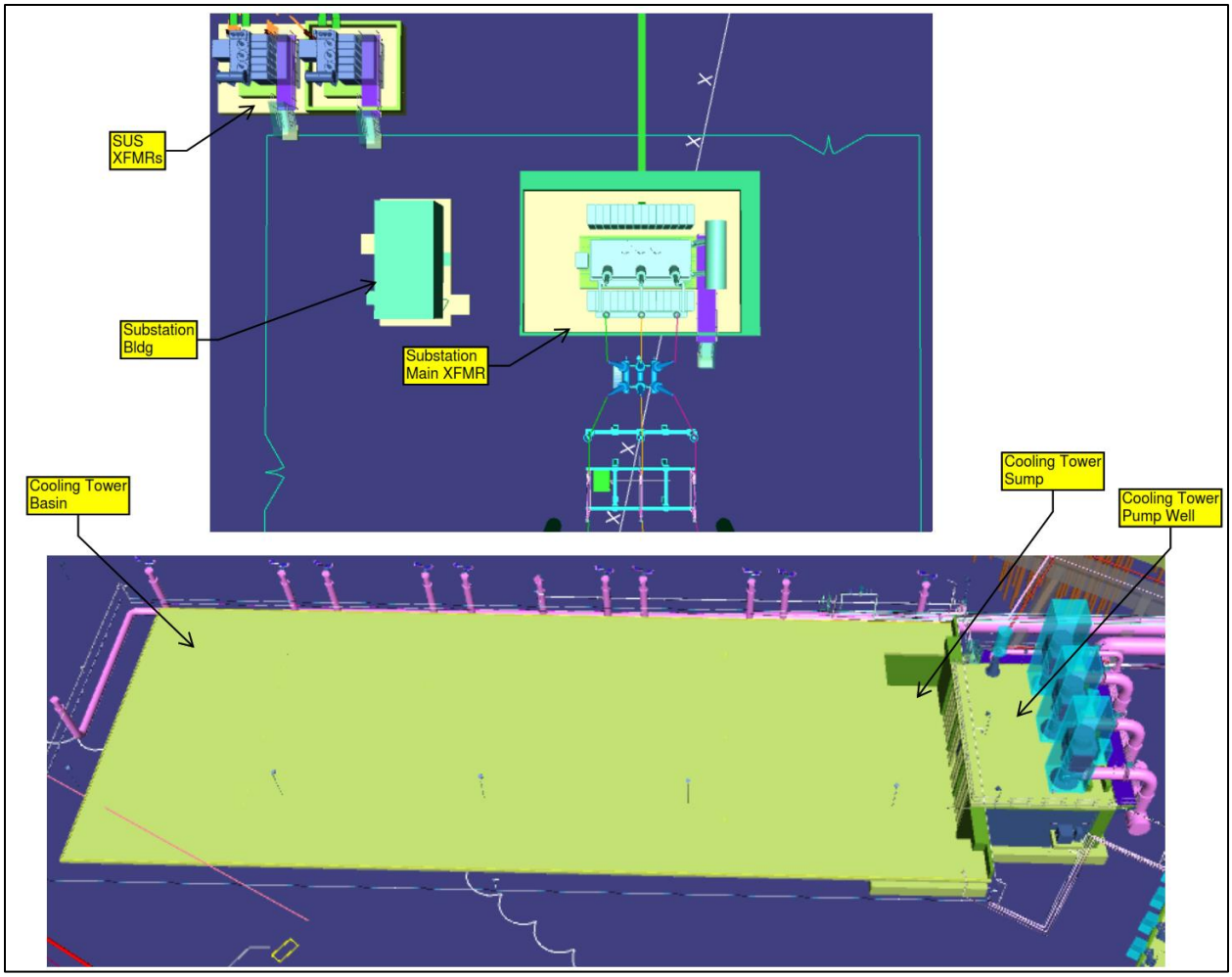

Figure 9: Preliminary 3D View of OSBL Foundations

	Pile Cap / Sump Base / Top Table			Pedestals / Sump Walls / Table Legs (Wall Total Length)			Auger Case Piles			Con-crete	Grout
	Rec L ft	Rec W ft	Depth ft	Length ft	Width ft	Depth ft	Qty per Pile Cap	Diam in	Depth ft	cubic yds	cubic yds
Substation Main Transformer											
Foundation and Containment Walls	63.5	43.5	2.0	210.7	0.8	2.6	---	---	---	221	---
XFMR Pedestal	31.0	14.0	2.6	---	---	---	---	---	---	42	---
Substation Building											
Foundation	34.0	19.0	1.5	---	---	---	---	---	---	36	---
SUS Transformer(s)											
Foundation	49.7	23.8	3.0	---	---	---	---	---	---	132	---
XFMR Pedestal (No Containment)	16.0	10.0	3.0	---	---	---	---	---	---	18	---
XFMR Pedestal and Containment Walls	16.0	10.0	3.0	---	---	---	---	---	---	28	---
Cooling Tower											
Foundation and Containment Walls	295.0	115.0	1.0	---	---	---	---	---	---	1,347	---
Sump Well	93.5	36.5	4.5	---	---	---	---	---	---	1,006	---
Pump Well	66.5	40.0	4.5	---	---	---	---	---	---	853	---
Top Slab	60.0	44.5	1.0	---	---	---	---	---	----	99	---

Table 21: Preliminary ISBL Foundation Dimensions

2.5 Task 2.5 - FEED Study Plant Integration Design

This task focused on integration of the existing NGCC plant and the new CO_2 capture system to ensure that the plant will operate properly meeting all grid requirements with minimal impacts on plant performance, costs, operability, and flexibility. The CCS integration specifically looked at:

- Steam extraction and corresponding ST modifications
- Exhaust gas extraction from the existing HRSG stacks
- Integration of current utilities and infrastructure including water treatment
- Integration of existing plant controls with the CO_2 capture and compression island controls

2.5.1 GT Exhaust Gas Recirculation (EGR) System

EGR Description

EGR is a technique to reintroduce a portion of the HRSG exhaust flue gas flow into the inlet of the GT after appropriate cleaning and conditioning. Recirculating part of the flue gas back to the gas turbine's inlet will increase the CO_2 concentration in the flue gas and reduce the flow of flue gas to the CCS facility. Less flow to the CCS facility will reduce the size of major components such as the direct contact cooler (DCC) and the absorber, leading to a reduction in both footprint and CapEx for the CCS facility. In addition, EGR reduces amine degradation due to reduced O_2 concentration in the exhaust gas, reducing amine make-up flow thus improving OpEx.

The EGR system for Plant Barry is depicted in the following figures:

- The EGR system process flow diagram (PFD) can be provided by GEGP on request
- The EGR system P&ID can be provided by GEGP on request.
- The EGR system 2D layout plan and elevation views are shown in Figure 13.
- The EGR system 3D layout is shown in Figure 14.
- The EGR system duct routing is shown in Figure 15.

Following is the EGR system description with numbers referenced on Figure 14:

- All of the exhaust gas from the HRSG exits the stack via a new port **(1)** installed in the side of the stack.
- The exhaust gas is routed through a duct **(2)** toward the CCS.
- A portion of the exhaust gas (40%) is extracted through a branch **(3)** off the main duct for EGR
- The EGR inlet damper **(4)** provides isolation of flow into the EGR system.
- The remaining exhaust gas (60%) is routed to CCS **(5)**.
- The amount of flow sent to CCS and EGR is managed by the CCS blower (not shown) and the EGR blower **(6)**.
- The EGR DCC **(7)** is located downstream of the EGR blower. The EGR DCC performs two functions: 1) cool the EGR stream to minimize the impact on plant performance, and 2) clean the EGR stream such that it meets the requirements at the inlet of the GT compressor.
- The EGR stream is routed from the DCC outlet to the GT inlet through a duct **(8)**.
- A purge stack **(9)** is used prior to ignition of the GT to remove a potential explosive atmosphere within the EGR system due to a gas leak from the gas turbine or the HRSG duct burner. During normal operation, the purge stack damper **(10)** remains closed.
- The EGR duct connects to the EGR inlet mixer **(11)** which injects the EGR stream into the GT inlet air downstream of the inlet filters.
- The EGR outlet damper **(12)** provides isolation between the EGR system and the GT inlet.

EGR Viability

As discussed in Section 2.2.1, results of GEGP's EGR viability assessment determined that EGR should be included in the final NGCC+CCS configuration.

The extent that EGR is practical (i.e. 10% vs 20% vs 40%) is tied to the operational capability and stability of the GT combustor. Multiple lab tests have clearly and consistently demonstrated that while some amounts of EGR recirculation are tolerable and even beneficial, excessive recirculation flows result in elevated levels of CO formation and an increase in unwanted oscillations and fluctuations in the combustion system (called combustion dynamics). To incorporate EGR, the combustor must have operability margin to be able to reliably manage the increased flame lengths and maintain optimum fuel splits for low emissions and dynamics. The current GT combustor at Barry Unit 6 is a DLN 2.6 and does not have adequate operability margin for any significant level of EGR. To apply EGR successfully, the GT combustor must be upgraded to the DLN 2.6+ flex.

GEGP has conducted some testing on the DLN 2.6+ combustor with EGR at 40% EGR. While the measured base load CO emissions are very low, the turndown CO levels may require one of the following mitigations:

- Reduction of EGR flow at part load, with EGR off at loads higher than may be preferred
- Increase of permitted CO level above 9 ppm at part loads
- Adding CO catalyst to the HRSG to lower part load CO levels
- Maintaining or elevating GT firing temperature at lower part loads to reduce CO levels

While the EGR represents a significant opportunity to save on the combined NGCC+CCS capital cost, there is a significant operating risk introduced to the GT – compressor corrosion. This risk is caused by the recirculation of the HRSG exhaust that includes both products of combustion and fuel-borne contaminants, such as sulfur. At high enough concentrations, the fuel-borne contaminants can result in a significant corrosion risk to rotating and stationary compressor components, particularly in the front portion of the GT compressor.

To reduce this risk, the compressor stators and blades will be coated for corrosion resistance (GEEC1) and a material upgrade will be applied to the compressor blades (GTD-494). Also, an SO_2 sensor will be installed at the outlet of the EGR loop to monitor the level of sulfur re-introduced into the GT inlet and to warn and limit operation of EGR if excessive SO_2 levels are detected for a prolonged period.

The other risk of corrosion is to the EGR system itself. However, the EGR design includes corrosion tolerant components (i.e. lined ducting) as well as a corrosion resistant design (i.e. location of isolation dampers to minimize exposed ducting when EGR is turned off).

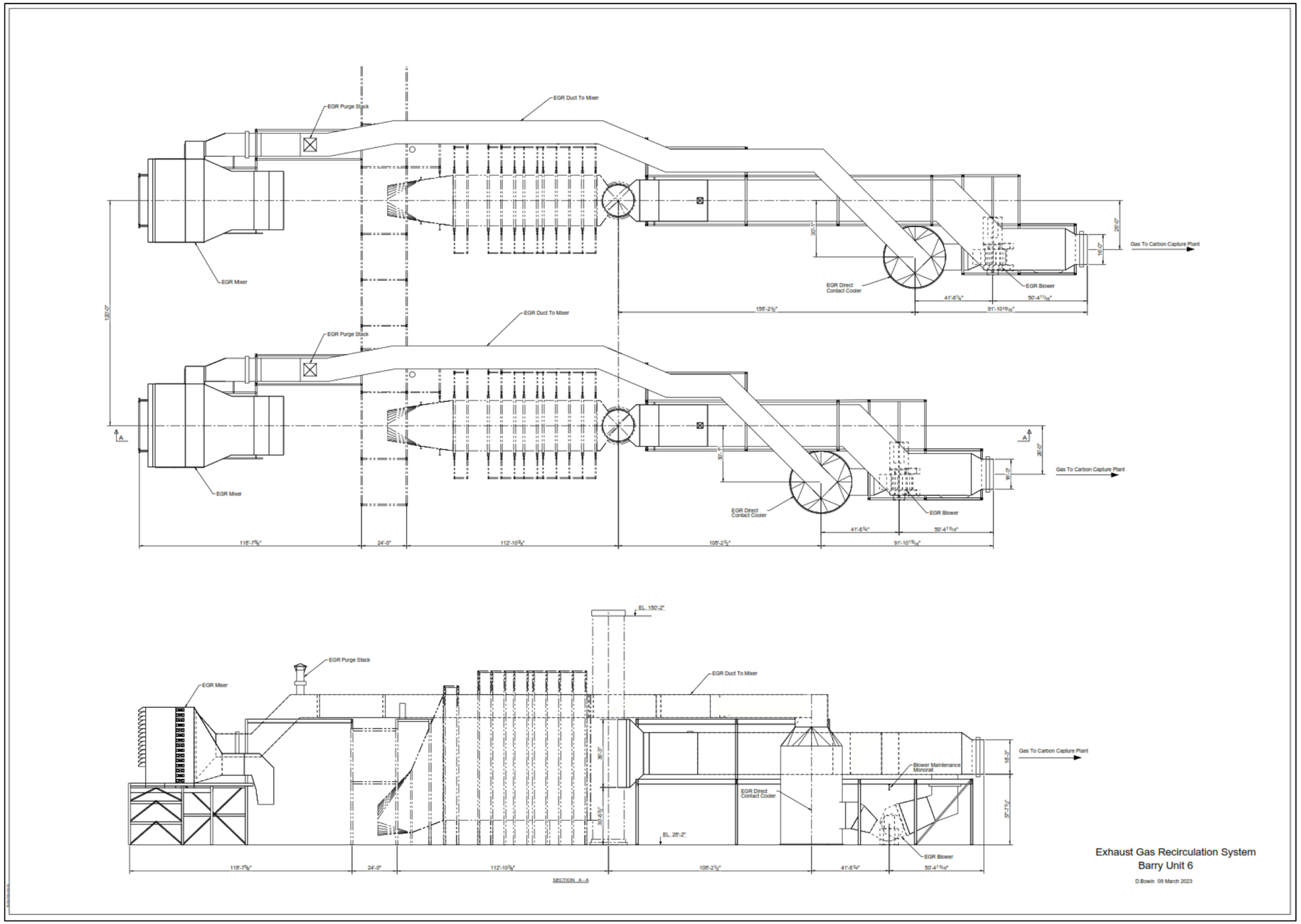

Figure 13: EGR Layout – 2D Plan and Elevation Views

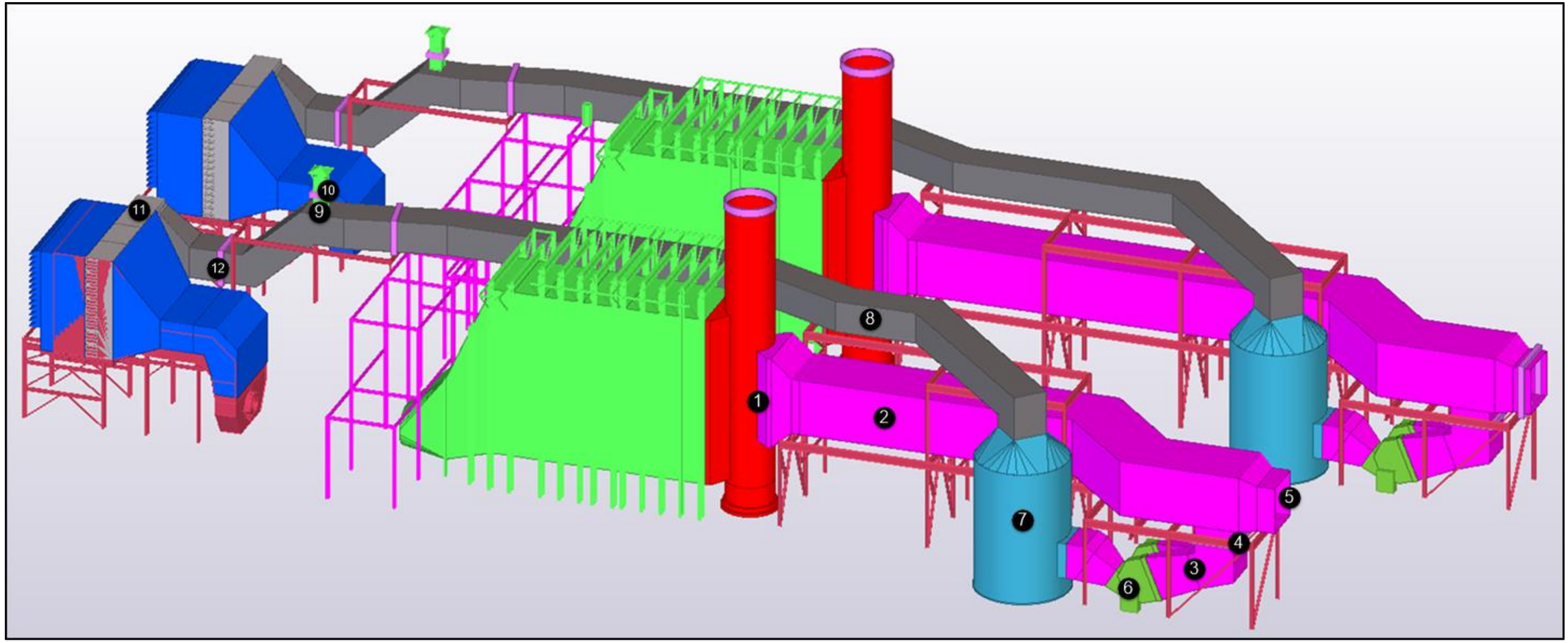

Figure 14: EGR Layout – 3D

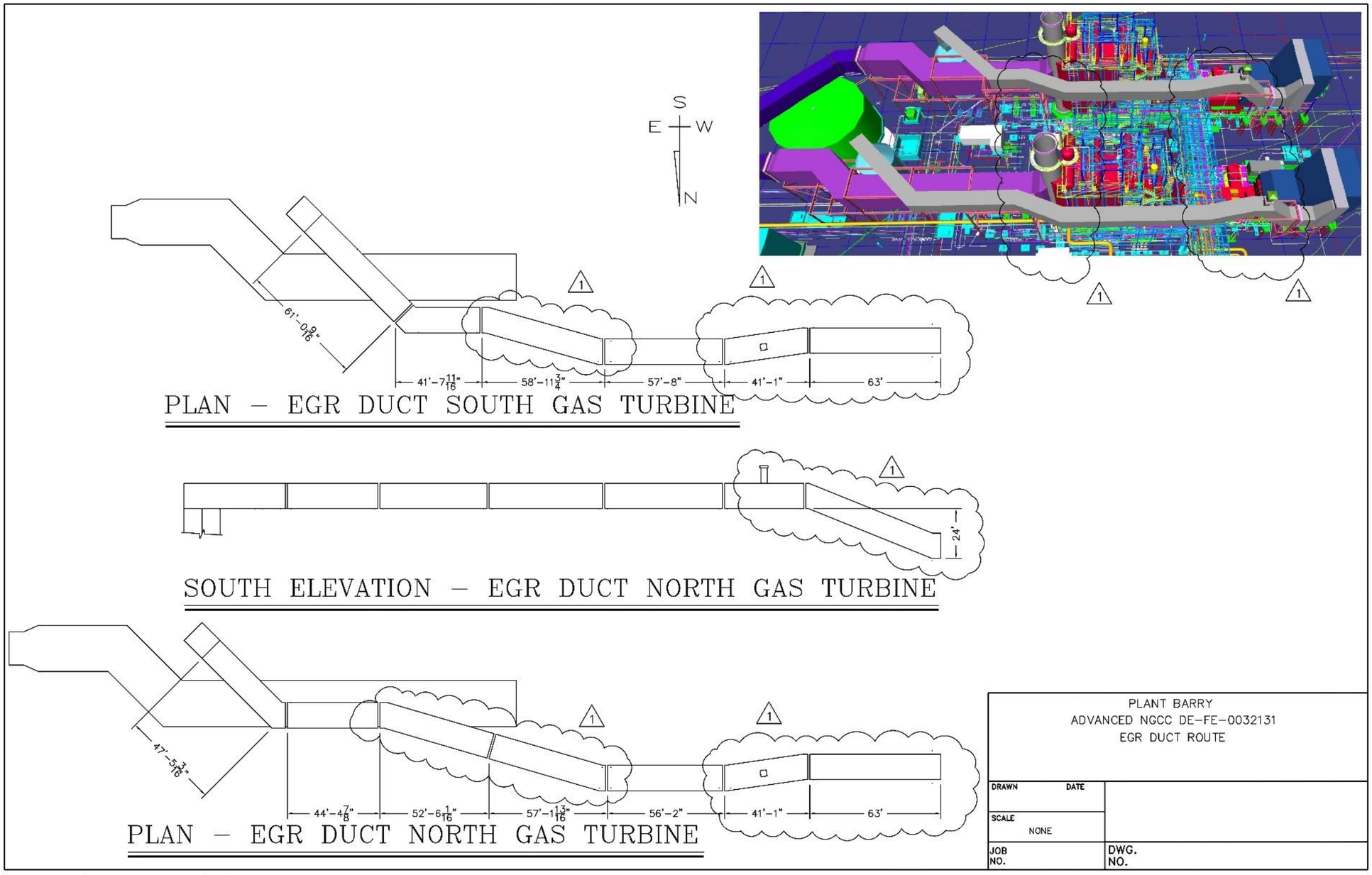

Figure 15: EGR Duct Route

2.5.1.1 EGR Mixer

As shown on the left side of Figure 13, the EGR mixer is located at the outlet of the EGR duct in the GT inlet house. The inlet mixer is designed to mix the flue gas and ambient air using a method similar to that used for inlet bleed heat piping. Flue gas flow is injected into the inlet via small orifice openings in a duct that traverses the cross section of the static mixer duct (see Figure 16). The mixing process assures that the temperature and flow gradients meet requirements set forth by the GEGP's GT compressor team.

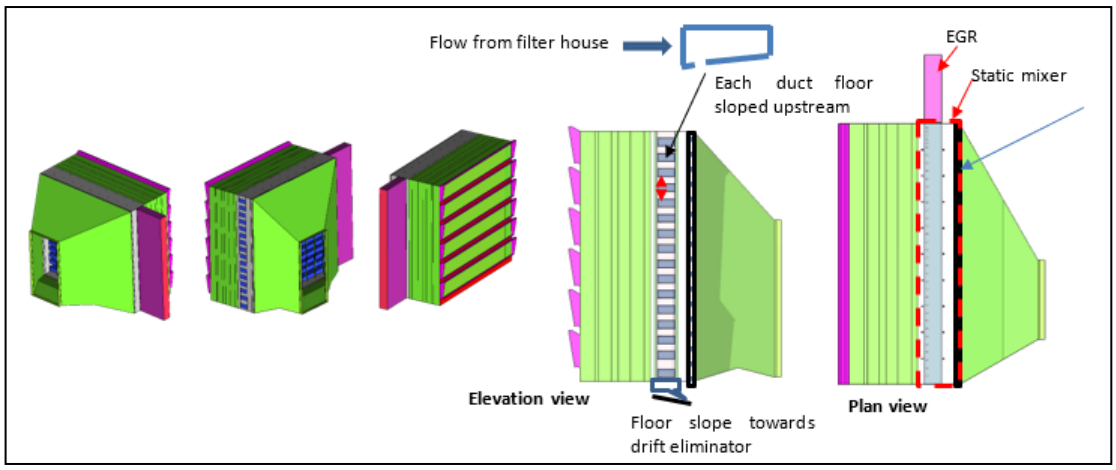

Figure 16: Proposed Configuration for EGR Mixer

2.5.1.2 EGR Load List

The EGR Load List dated 04/10/2023 is available in Appendix QQ. This document was produced by GEGP and provides information on electrical loads for the EGR system.

2.5.1.3 EGR Equipment List

The EGR Equipment List is available in Appendix RR. This document was produced by GEGP. It provides a list of equipment required for EGR and includes weight and size.

2.5.2 Integration of Steam Supply for the CCS

As discussed in Section 2.2.3, CCS requires a large amount of steam in the reboiler to release high purity carbon dioxide from the capture solvent. There are several steam sources available in the NGCC. Each source has a different amount of steam available, and its use has different impact on the existing NGCC.

The steam required by the CCS in the Final Design Case is 587,925 lb/hr at 72.5 psia and 330°F (see Table 12). After extensive analysis, which is discussed below, GEGP determined that the steam at full load will be supplied from a combination of 3 sources (extracted in the order provided below):

- HP Steam from Main Steam Piping
    - 26,910 lb/hr@1023°F from HP steam header pipe
    - 33,629 lb/hr after attemperating to 330°F
    - Extraction location is used as needed at high loads / ambients to maintain HP throttle pressure <1950 psia

- LP Steam HRSG LPSH Outlet
    - All LPSH produced in HRSGs is extracted for CCS
    - 130,698 lb/hr@498°F from LP Steam Header Pipe
    - 140,683 lb/hr after attemperating to 330°F
- LP Steam from Crossover
    - Balance of steam required to support CCS
    - 370,631 lb/hr@586°F from LP Crossover (before Butterfly Valve)
    - 413,613 lb/hr after attemperating to 330°F

Steam from LP Sources

Referring to the performance for the Final NGCC+CCS Configuration (Table 12), the amount of steam available at the HRSG LPSH outlet is ~120-130k lb/hr, versus the total CCS steam requirement of ~600-620k lb/hr. The LPSH can supply approximately 20% of the required flow to the CCS. The remaining 80% of the CCS required steam flow must come from other sources in the NGCC.

The remaining steam would ideally be extracted from the ST at the LP crossover, as this steam has conditions similar to reboiler requirements. However, the existing steam turbine design, if subject to such a large extraction without any modifications, would have a pressure in the LP crossover of ~30 psia (~2 bara) which is much lower than the ~72.5 psia (5 bara) extraction pressure required to supply the CCS with steam. To support the required extraction pressure, the LP section must be modified to reduce nozzle areas and to increase the LP crossover operating steam pressure. After extensive review of the Barry Unit 6 steam turbine design, GEGP determined that the LP inlet nozzle area can be decreased by 15% without LP rotor replacement, and by 30% with LP rotor replacement (with corresponding 18% and 43% increases in LP crossover operating steam pressure). The modification recommended for this retrofit is a 15% decrease in ST LP inlet nozzle area to minimize cost and outage duration.

In addition to the reduction in inlet nozzle area, a new butterfly valve must be installed in the LP crossover to maintain constant supply pressure to the new CCS steam extraction. The butterfly valve will be located in the area highlighted in Figure 17.

The LP crossover butterfly valve is impacted by the GT upgrade. In general, the larger the GT upgrade, the better it is for the butterfly valve because it raises the downstream pressure and reduces the butterfly valve pressure drop further below its 30-35% limit. While the LP crossover butterfly valve prefers a larger GT upgrade, the ST IP section pressure ratio (which is limited to ~8:1 pressure ratio) prefers a smaller upgrade.

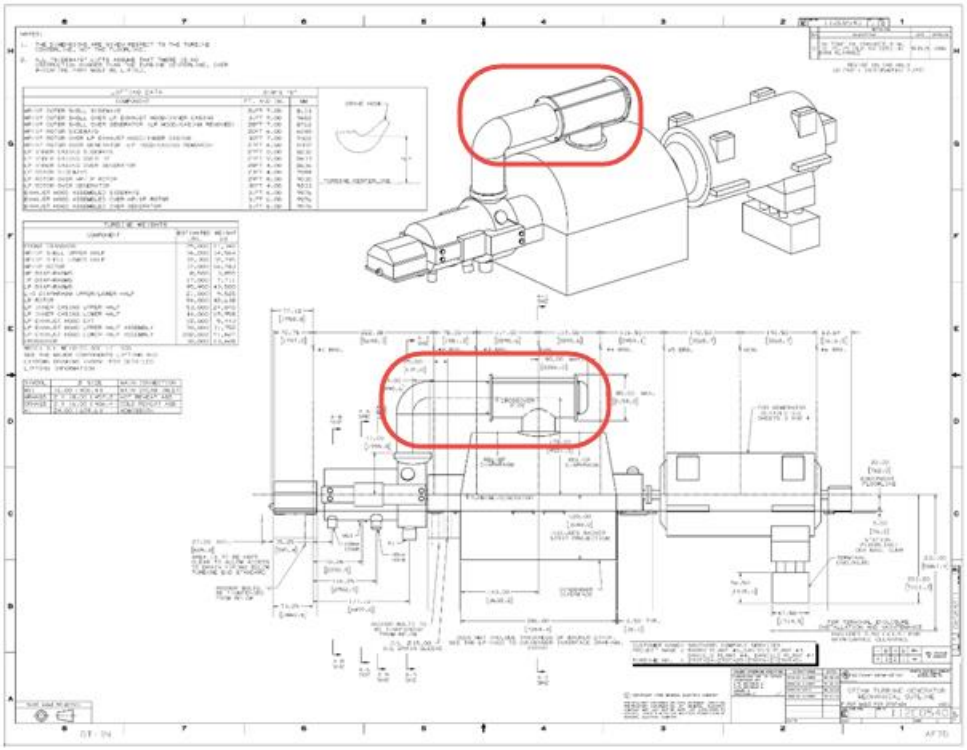

Figure 17: New Extraction Location in Existing Steam Turbine LP Crossover

Steam from ST HP Throttle

With the GT upgrades recommended in Section 2.5.4, there will be higher amounts of HP steam produced in the HRSG that need to pass through the ST sections. This increased flow will require an increase in inlet nozzle areas of the ST HP and IP sections (unlike the decrease in LP inlet nozzle discussed earlier due to the large CCS steam extraction). After extensive review of the GE D11 steam turbine design, GEGP determined that the ST HP and IP inlet nozzle areas can only be increased 15% without expensive HP/IP casing modification and inlet piping replacement. With the down-selected GT upgrade coupled with this limited 15% increase in HP and IP inlet nozzle areas, the ST HP throttle pressure (inlet before control valves) will be slightly too high. The solution to this design challenge is to apply a small amount of HP steam extraction (5 to 15% of the total required steam to the CCS steam header) at baseload and high loads, with the HP extraction flow controlled to maintain the desired ST HP throttle pressure.

The compromise related to the less expensive modification is an increase in the ST output loss when steam is extracted from the HP header. Also, the limitation in reduced LP section steam capacity results in reaching the turndown limitation of the new LP crossover butterfly valve at moderate loads, and for any low loads the steam supply for the CCS reboiler must shift to the HP steam, increasing ST output losses.

Summary of Steam Integration Strategy

In summary, the steam integration strategy for Barry Unit 6 is:

- **ST HP Throttle**

- Increased flow capacity (higher AeN's) for HP and IP sections of the ST proportionate to the GT uprate demand.

- **HRSG LPSH Outlet**
  - Redirect the LPSH outlet steam to the LP steam piping to the CCS. This will hold the HRSG LP drums at a near constant pressure of ~ 6 bara.

- **ST LP Crossover**
  - Install new ST LP crossover butterfly valve to create a controlled pressure supply location for the 5 bara steam to the CCS.
  - Steam will be supplied from the LP crossover, upstream of the new butterfly control valve.
  - Decrease the size of the LP section of the ST.

2.5.3 Existing NGCC P&ID with Tie-in markup

2.5.3.1 LP Admission Line from HRSG and ST LP Crossover Extraction

The LPSH extraction is located in the combined LP header, immediately after steam from the two HRSGs is combined.

2.5.3.2 HP Header from HRSG

The HP alterative extraction is located in the combined HP header, immediately after steam from the two HRSGs is combined.

2.5.4 Gas Turbine Modifications

2.5.4.1 Summary of Gas Turbine Modifications

This section contains a summary of gas turbine modifications. See Appendix SS.

Advanced Compressor

The upgrade to advanced compressor (also known as 7F.04-200) consists of retrofitting a 7FA.05 compressor, GEGP's most advanced high efficiency compressor technology, into 7FA.03 gas turbines with Advanced Gas Path hardware to provide significant improvements in output and heat rate, as well as enhancements in reliability and maintainability.

F-Class Gen-V Turbine Rotor

The latest F-Class turbine rotor technology allows for higher compressor discharge temperatures that result from the higher airflows of the Advanced Compressor.

DLN 2.6+ Combustion System

The 7FA DLN 2.6+ combustor is a common architecture across the 7FA.03, 7FA.04, and 7FA.05 gas turbine models. The combustor can deliver lower NOx and equal CO emissions at guaranteed levels as compared with the DLN 2.6 system. It also provides improved combustion inspection (CI) intervals, higher ethane and H_2 tolerance, and improved flexibility with lower turndown levels with increased modified Wobbe index (MWI) range.

7F AGP Repair-to-Tech

The 7F Advanced Gas Path (AGP) program utilizes 7F.04 Hot Gas Path (HGP) technology which incorporates cooling and sealing enhancements and advanced materials to allow efficient operation at increased firing temperatures. Together with the low delta-P DLN 2.6 or 2.6+ combustor and model-based controls architecture, the AGP uprate delivers improved output and heat rate while increasing hardware inspection intervals and replacement lives; all while maintaining base load emissions levels.

7F Robust Exhaust Frame Upgrade

The upgraded Exhaust Frame resets the life of the exhaust portion of the unit to as-new while providing the latest design improvements.

7FA Shaft HP Limit Increase

The increased 7FA shaft torque limit allows customers that are installing the 7FA Advanced Gas Path uprate to realize the maximum output advantage across the entire ambient range of the gas turbine.

Aspirated Hazardous Gas Protection System

GEGP offers a solution to protect a gas turbine unit from hazardous gas leaks with a panel-mounted system with a lower explosive limit (LEL) protection circuit that is tied into the controls logic.

Triple Modular Redundant (TMR) Pressure Monitoring

This modification will upgrade the existing pressure monitoring devices to a triple modular redundant (TMR) configuration in the turbine compartment.

Safety Shutoff Valve (SSOV) and Vent Valve (SSOVV)

The safety shut off system is comprised of two separate valves, a stop valve (SSOV) and a vent valve (SSOVV). These valves are located outdoors upstream of the fuel gas module (FG1). They stop and vent (to the atmosphere) the fuel gas to the GT in the event of Fire Detection, Hazardous Gas Detection, and Emergency Stop activation.

7FA.05 Roof Upgrade and Ventilation Mod

This upgrade is to provide a replacement turbine compartment roof, including the ventilation blower skid, for improved ventilation and control of compartment temperature.

Insulation Kit

This scope consists of insulation covering the heated piping systems within the gas turbine compartment.

2.5.5 Steam Turbine Modifications

Barry Unit 6 has a GE 207D-11 steam turbine that operates at full speed (3600 RPM). The turbine train includes one opposed flow HP/IP section and a double flow five (5) stage LP section with 33.5 inch last-stage bucket (LSB).

As discussed in Section 2.5.2, the existing ST has significant limitations when CCS is added to Barry Unit 6. Despite reducing the ST generator output due to the large LP extraction, the HP and IP sections have limited capacity to accommodate the increased steam flows associated with the GT upgrades.

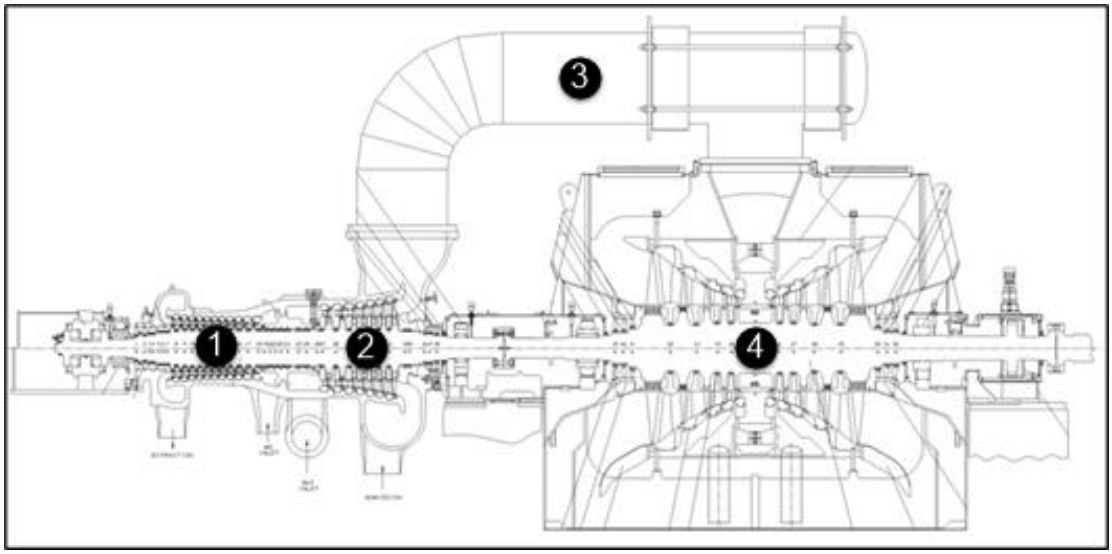

Figure 18: Typical GE D11 Cross Section with Locations Requiring Modification to Support CCS

To accommodate carbon capture, the existing ST needs to be modified in 4 primary areas (see Figure 18):

1) **HP Section Steam Capacity** – Due to the increased total steam generated in the HRSG caused by the GT modifications, the existing ST HP section does not have enough flow passing capacity without exceeding the maximum allowable ST HP inlet throttle steam pressure. To accommodate CCS, the HP inlet nozzle area will be increased by 15%.
2) **IP Section Steam Capacity** – Like the existing ST HP section, the existing ST IP section does not have enough flow passing capacity without exceeding the maximum allowable ST IP / hot reheat steam pressure. To accommodate CCS, the IP inlet nozzle area will be increased by 15%.
3) **LP Crossover** – To maintain constant supply pressure to the new CCS steam extraction, a new butterfly valve must be installed in the LP crossover. The existing LP crossover must be replaced to allow for the installation of the butterfly valve. See Figures 19 and 20 for the proposed modifications. The new steam extraction for CCS is located upstream (i.e., before) of the LP crossover butterfly valve.
4) **LP Section Steam Capacity** – Due to the large steam extraction to the CCS reboiler, the flow passing through the ST LP section is significantly reduced, even when factoring in the new higher total steam flow produced in the HRSG. To accommodate CCS, the size of the LP section of the ST will be decreased by 15%.

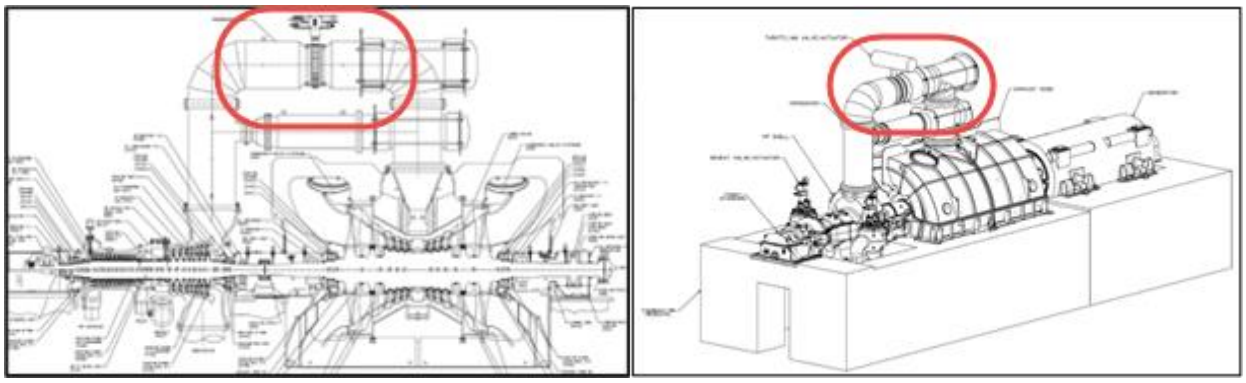

Figure 19: Conceptual Elevation View of Steam Turbine Cross-Section with Butterfly Valve

Figure 20: Conceptual 3D View of Steam Turbine with Butterfly Valve

2.5.6 HRSG / Stack Modifications

The HRSG requires the following changes to accommodate CCS:

- **CCS Breach Retrofit** – New opening into the side of the existing HRSG stack
- **Stack Damper** – New damper with seal air located at the top of the existing stack

Note that there are no changes to the HRSG due to the inclusion of EGR.

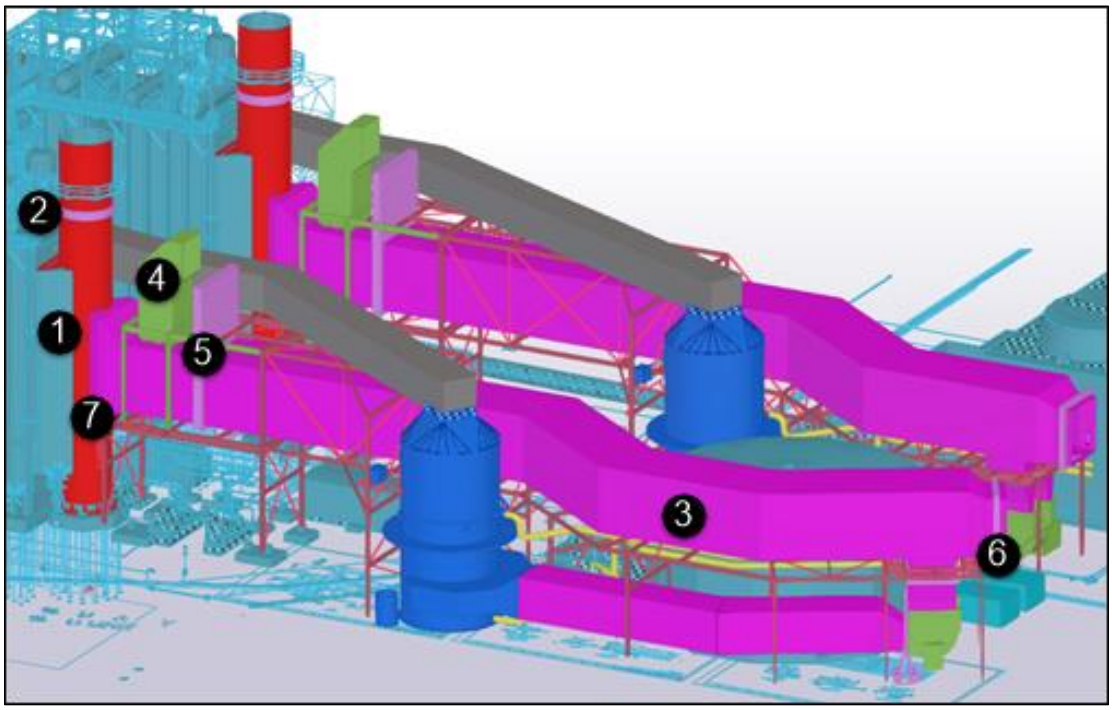

Figure 21: Proposed HRSG and Stack Modifications (Conceptual)

Note the following while reviewing Figure 21:

- The size of the HRSG stack breach **(1)** retrofit into the existing HRSG stack is based on calculations developed for a previous GEGP project.
- The new 16'-10" diameter stack damper **(2)** will be located at top of stack, with seal air included to provide 100% sealing when CCS is operating. The stack damper is expected to fully open or close blades in 50-60 seconds using a motor actuator.
- The duct from the HRSG to the CCS **(3)**, is approximately 22'-2" square, and includes a conceptual blow-out panel **(4)** for high pressure protection followed by a 22'-2" square guillotine damper **(5)**. After the flow extraction for EGR, there is another set of dampers **(6)** provided for double isolation of the CCS for maintenance activities inside the CCS duct during unabated operation. The isolation dampers are 16'-0" wide x 18'-3" tall and will include seal air to provide 100% sealing when CCS is not operating. The isolation dampers will fully open or close blades in 50-60 seconds using a motor actuator.
- The damper seal air will be supplied by a single system that will be shared by the HRSG stack **(2)** and CCS inlet **(6)** dampers as only one damper will be closed at a time.
- The HRSG stack will not support the CCS duct or dampers. An expansion joint **(7)** upstream of the CCS inlet damper **(5)** will isolate the CCS duct **(3)** from the HRSG stack.

2.5.7 CCS Flexibility/Operability

The FEED study statement of project objectives (SOPO), Appendix B, includes detailed design and overall integrated CCS design impacts on NGCC power plant performance including operability and flexibility. Flexibility and operability are defined by various NGCC+CCS operations, specifically starting, loading, unloading, and shutdown. Additionally, as outlined in both the steam supply and the cooling water supply systems, CCS upset conditions must be considered when planning for NGCC+CCS flexibility.

The design of the CCS retrofit at Barry Unit 6 includes a multitude of features that enhance the flexibility of the NGCC+CCS plant, including:

Exhaust Gas Recirculation (EGR)

- EGR has multiple benefits that are not related to flexibility:
  - Reduced capital cost (-$43.9MM TPC)
  - Reduced fuel cost (-0.4% due to improved net heat rate)
  - Increased net plant output (+6.4MW)
  - Reduced solvent degradation (due to lower O_2 in CCS flue gas)
- EGR also provides flexibility benefits:
  - Able to ramp EGR flue gas flow rates up and down as needed to serve as "shock absorber" between GT topping cycle, CCS, and the steam bottoming cycle.
  - During plant startup, EGR may be operated during very low loads near minimum emissions compliance level (MECL). This will improve GT combustor stability thereby extending the GT operating envelope allowing higher steam production to accelerate heating of CCS inventory and decrease CCS cold startup times.

Dry Low NO_x (DLN) 2.6+ GT Combustion System

DLN 2.6+ is required for the application of EGR to allow stable GT operation at current NOx and CO levels (<9ppm). However, there are additional benefits to the DLN 2.6+ combustor that also add flexibility:

- Minimum Emissions Compliance Level (MECL) – The application of DLN 2.6+ extends MECL to 38% GT load (vs 50% for current combustor). This significantly extends the operating range of the plant with full GT and plant emissions compliance. The current NGCC plant and the new CCS system will be fully capable of operating over the entire GT operating range. Some changes to the steam supply will be required at very low loads.
- DLN 2.6+ enables the application of variable load path (VLP) that allows the GT startup to be tailored to enable use of increased GT airflow with reduced GT firing temperatures to be used both prior to MECL during startup and after MECL during normal operation. Increased GT airflow results in much faster generation of steam in the HRSG and allows both the ST and the CCS to heat up faster during cold and warm starts. Without this increase, the start time is delayed waiting for those components to reach full temperature before stable operation is capable.

Cooling Water Supply for CCS

The amount of waste heat associated with the CCS is very large, adding nearly 50% to the current waste heat of the existing NGCC plant. The cooling water to the current NGCC plant is supplied by a cooling tower using makeup water pumped from the Mobile River. The plans for the CCS application include the installation of an addition cooling tower also using makeup water from the Mobile River. As an option for reducing the capital cost of adding cooling water capacity for CCS, a large portion of the existing cooling water could be diverted to the new CCS demands. However, this is a large amount of diverted flow, in large diameter pipes and would involve very large valves if the flow needed to be re-diverted back to the steam condenser.

The primary risk/concern associated with this system is not related with startup, loading, unloading or shutdown but rather is related to a particular class of upset conditions. During operation of the CCS there is a large steam extraction from the NGCC HRSG and ST. This steam is used in the CCS reboilers to separate the CO_2 from the solvent. In the event of a CCS upset (such as loss of CCS flue gas fan, CO_2 compressor failure, CO_2 pipeline inability to accept offtake, etc) the steam cycle will suddenly see the steam extraction go to zero (or near zero if some steam is used to keep CCS “hot”). This will result in an immediate increase of nearly 2x to the NGCC steam condenser heat load. If the cooling water cannot be rapidly diverted back to the steam condenser, the ST exhaust pressure will rapidly rise and if it goes too high will trip the ST operation to protect the equipment. This rapid trip of the ST also causes an increased risk of tripping the GTs due to HRSG drum instability.

For Barry Unit 6, based on feedback from the site owner/operator, the cooling water from the existing cooling tower will not be diverted to the CCS. This results in the installation of a much larger cooling tower (~2x) for the CCS cooling needs.

Steam Supply for CCS

A very large amount of low pressure steam is required in the CCS reboilers to separate the CO_2 from the solvent. As discussed in Section 2.5.2, the source of steam to the CCS comes from the existing NGCC steam system, using a combination of HRSG LP steam, LP extraction steam from the ST crossover, and HP steam.

To minimize the performance penalty in lost ST output, the steam should be extracted to the extent possible in the following order: HRSG LP superheater outlet (results in holding LPSH outlet at constant ~75 psia pressure), ST crossover (requires holding ST IP outlet to ~75 psia for as much of load range as possible), and HP steam header (requires pressure letdown and attemperation to ~500°F).

- **LP Steam**

  There is a single CCS LP steam header providing steam to both trains of CCS (1 behind each GT/HRSG). The steam header splits into two (2) lines near the CCS reboilers. The pressure of the NGCC LP steam supply to the CCS reboilers is regulated by two pressure control valves, and two water spray attemperators provide steam temperature control.

  The LP Superheater can be connected directly to the CCS LP supply header, which is maintained at a constant pressure. To maintain the CCS LP supply header, the primary control is managed by the new LP crossover butterfly valve, and the secondary pressure control by the HP-to-CCS bypass valve. The LP crossover butterfly valve controls to a CCS LP supply header pressure of 75 psia, and couples with a minimum valve open position of 30%. The LP crossover butterfly valve is not a rapid response device and is intended to open and close at a relatively slow pace. If the LP crossover butterfly valve hits the limited 30% open position, the resulting steam pressure upstream of the LP crossover butterfly valve will drop below 75 psia. If the pressure drops below 65 psia, the HP-to-CCS bypass steam valve will open and throttle to maintain 65 psia in the CCS LP supply header. As the HP supplies more and more of the steam demand, the non-return valves in the LP extraction from the LP crossover will automatically close to prevent steam from reverse flowing into the LP crossover. As the crossover pressure downstream of the LP crossover butterfly valve goes low, the LP crossover butterfly valve is commanded to 100% open to restore some performance to the ST output. All operation at loads below the point at which the LP crossover butterfly valve has reached its limited minimum open position will have steam supplied by the HP-to-CCS bypass valve. If the plant load increases such that the pressure after the LP crossover butterfly valve goes high enough, the LP crossover butterfly valve will resume operation maintaining the pressure upstream of the LP crossover butterfly valve at 75 psia with a minimum 30% valve opening.

- **HP Steam**

  The HP-to-CCS bypass line takes HP steam from the HP steam header. After passing the HP steam through a pressure control valve, the steam is conditioned with a spray water attemperator to ~500°F to match the conditions of the steam from the HRSG LPSH exit. The HP-to-CCS bypass valve is modulated to maintain the CCS LP supply header at 65 psia. It is not a rapid response device (i.e., it is intended to open and close at a relatively slow pace).

- **Operating Limitations for Steam Supply**

  The new LP crossover butterfly control valve introduces a new set of operating limitations to the steam turbine. The limitations are related to the butterfly valve holding a constant pressure. As the butterfly valve closes, the pressure drop across the butterfly valve increases. Depending on the robustness of the butterfly valve, the pressure drop reaches a maximum safe operating level at some point. Beyond that level, the valve may be permanently damaged and either lock in place or be hampered in operating across the ranges that are required. After consultation with GEGP's

current vetted and approved butterfly valve supplier for ST applications, that limit has been identified as 30-35% pressure drop across the valve. This limit is exceeded for several of the base load heat balance cases, and therefore, GEGP is exploring other valve suppliers/configurations to identify valve solutions with an allowable pressure drop limit in the 40-60% range.

In addition to the butterfly valve pressure drop, as the ST load is reduced and the LP crossover butterfly valve is closed to maintain ST extraction steam pressure to supply CCS, the intermediate pressure (IP) inlet pressure is steadily decreasing with load, while the IP outlet pressure is held near constant. This scenario has the result of decreasing the IP pressure ratio, which has two main impacts:

- First and foremost, the exhaust temperature of the IP ST steadily increases with decreasing IP section pressure ratio. The original design IP pressure ratio of ~7:1 resulted in an IP section exhaust temperature of ~550°F. As the ST operates at reduced plant loads with the new CCS fixed pressure extraction, the IP section exhaust steam temperature will rise steadily until it reaches its limit.
- Second, if the LP crossover butterfly valve does not reach its maximum allowable pressure drop first, the ST IP section exhaust temperature will reach its maximum. Exceeding that maximum allowable operating temperature could potentially run the risk of excess casing distortion and/or rotor rub and vibrations, putting operation of the ST at risk. There would also be a remote risk of high temperature steam leaking past the horizontal joint onto the turbine deck, resulting in significant operational and safety risks. This is clearly a limit that must not be exceeded.

If either of these limits (LP crossover butterfly valve pressure drop and/or steam turbine IP exhaust temperature) are exceeded, the LP steam extraction must be shifted to HP steam. Note that the HRSG LPSH outlet can continue to supply ~20% of the steam. The required shift is only for the remaining 80% steam supply. Depending on the allowable pressure drop limit of the LP crossover butterfly valve that is selected and the operating conditions, the limit will be reached at some part load condition and the alternate source of HP steam will be required from that part load condition down to the GT minimum emissions compliance level (MECL).

If CCS is taken offline above 50-60% NGCC baseload, a portion of LP steam must be bypassed around the LP section of the ST to safeguard from over-pressuring the crossover with the newly reduced LP ST section. Another option is to utilize the Hot Reheat to condenser bypass to bypass the same amount of steam around the IP and LP sections.

While none of the primary steam control valves are rapid response, the cascading arrangement of steam supply (LP, then HP) and the utilization of a non-return valve in the LP steam supply creates a rapid response system that is fully able to support rapid loading and unloading events.

Flue Gas Control

The HRSG exhaust is currently directed through the HRSG stack to the atmosphere. With the addition of CCS there are several additions required to the HRSGs including: extraction for flue gas portion passing to the EGR system with a modulating louvre damper, extraction for flue gas passing to CCS system with an open/close louvre damper, and an open/close stack louvre damper in the existing HRSG stack above the new flue gas extractions. The intent of the CCS and HRSG stack dampers is to be binary – one is expected

to be 100% open and other will be fully closed. The flue gas either goes 100% to the existing HRSG stack or it goes to the CCS system with a controlled percentage going to the EGR system. In the event of a CCS upset, the HRSG stack damper opens to safeguard HRSG exit pressure to avoid HRSG flue gas over-pressurization.

The CCS flue gas louvre damper is used to engage and disengage the CCS system as well as isolate when the CCS system is off. The CCS flue gas louvre damper is binary – it is 100% open or fully closed. In the event of protection from high flue gas pressure, the HRSG stack louvre damper is employed.

The HRSG stack louvre damper is used for three primary purposes: isolation of HRSG exhaust flow during CCS on operation, safety mitigation in the event of HRSG exit elevated pressure (likely caused by malfunctioning CCS flue gas louvre damper or CCS flue gas booster fan), and thermal energy conservation of HRSG during GT shutdown periods. In normal operation, the HRSG stack louvre damper is binary. It is expected to be 100% open or fully closed. This “normal” operation describes CCS off (100% open), CCS on operation (0% open) and GT off shutdown periods (0% open). During an upset event resulting in high HRSG exhaust pressure, the HRSG flue gas louvre damper will be commanded to a 100% open position. Note that for rapid response to HRSG exhaust flue gas high pressure, the GT inlet guide vanes (IGVs) will rapidly modulate partially closed providing faster relief to the rising HRSG exhaust flue gas pressure. After a brief period of GT IGV intervention, the GT IGVs will slowly return to their normal position by which time the HRSG stack louvre damper will be fully open.

2.5.8 NGCC+CCS Operating Philosophy

The NGCC+CCS Operating Philosophy dated 02/15/2023 is available below. This document was produced by GEGP.

Retrofittable Advanced Combined Cycle Integration for Flexible Decarbonized Generation

Deliverable:
Determine CCS Operating Philosophy

Submitted by PI: John Sholes
CCS Systems Integration Leader
864-293-0353
john.sholes@ge.com

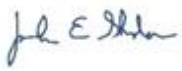

Submitted February 15, 2023

DOE Cooperative Agreement No. DE-FE0032131

Revision Notes:

Feb 15, 2023:

- **Draft release. Updates are expected after completion of preliminary design and HAZOP**

Acronyms:

AeN-	Steam Turbine Effective Nozzle Area
AGP-	Gas Turbine Advanced Gas Path upgrade
BOP –	Balance of Plant
CapEx –	Capital Expense
CC -	Combined Cycle
CCP -	Carbon Capture Plant
CCS –	Carbon Capture System
CCW -	Cooled Cooling Water
CF –	Capacity Factor
CO_2 T&S –	CO_2 Transportation and Storage
CRV –	Combined Reheat Valve (at Hot Reheat)
CSCV –	Combined Stop and Control Valve (at HP inlet)
CW -	Circulating (Cooling) Water
DB –	Duct Burner in HRSG to produce additional steam
DCC –	Direct Contact Cooler
DLN –	Dry Low NOx (combustor)
EC -	Gat Turbine inlet Evaporative Cooler
EGR –	Exhaust Gas Recirculation
FEED –	Front End Engineering Design
GE –	General Electric
GEGP –	General Electric Gas Power
GSU –	Generator Step Up Transformer
GT –	Gas Turbine
HOR0 –	High Output Row 0 GT Compressor
HHV –	fuel Higher Heating Value
HP –	High Pressure Steam Turbine section
HR –	Heat Rate
HRH –	Hot Reheat (inlet to IP Steam Turbine section)
HRSG –	Heat Recovery Steam Generator
IP –	Intermediate Pressure Steam Turbine section
LCA –	Life Cycle Analysis
LCOE –	Levelized Cost of Electricity ($/MW-hr)
LHV –	fuel Lower Heating Value
LP –	Low Pressure Steam Turbine section
MECL –	Minimum Emissions Compliance Load on Gas Turbine
MT –	Metric Tonne (1000 kg)
NGCC –	Natural Gas Combined Cycle
NPV –	Net Present Value
OPEX –	Operating Expenses
PA –	Power Augmentation to Gas Turbine with steam injection to combustor
SCR -	Selective Catalytic Reduction (in HRSG)
SH -	Superheater (HRSG)
SIPA -	Steam Injection for Power Augmentation to Gas Turbine to combustor
ST –	Steam Turbine
TEA –	Techno-Economic Analysis
XO –	Steam Turbine Crossover (at input to double flow LP section)

CCS/NGCC Operating Philosophy

This document describes the Operating Philosophy of a Carbon Capture System (CCS) in conjunction with a Natural Gas Combined Cycle (NGCC) Plant at Southern Company, Alabama Power Company, Plant Barry, Unit 6.

The integration of the CCS with the NGCC is comprised of several major subsystems:

NGCC:

GT - Gas Turbine is primary consumer of natural gas fuel, producing approximately 2/3 of plant power, with high temperature exhaust flue gas (1100-1200°F) being utilized to create steam to allow more energy to be converted to power. The existing GT is a natural gas only (no alternate fuels).

HRSG – Heat Recovery Steam Generator, converts heat from GT exhaust into steam. Steam is generated at 3 different pressure levels (High Pressure, Intermediate Pressure, and Low Pressure) to maximize the recovery of GT exhaust energy. The exhaust flue gas (200-220°F) of the HRSG is directed to a Stack and exhausted to the atmosphere. The existing HRSG has both a duct burner and an SCR. The HRSG duct burner was sized to provide a small amount of additional HP steam to max out the Steam Turbine, or a larger amount of additional HP steam with the additional HP steam diverted to the GT combustor for Power Augmentation.

ST – Steam Turbine uses the steam flows (HP, IP and LP) produced in the HRSG to produce approximately 1/3 of the plant power. The ST exhaust is fully condensed into water before being pumped back to the HRSG as a part of the closed-loop steam cycle.

NGCC CCW – NGCC Cooled Cooling Water System uses a Fan Driven Cooling Tower to cool water to near ambient wet-bulb temperatures, which can then be used to cool the ST condenser (~96% of heat load) as well as GT and ST lube oil and generator H2 coolers (~4% of heat load). The Cooling Tower evaporates approximately 2000 gpm of water, and has approximately 500 gpm of blow down, resulting in 2500 gpm of makeup that is drawn from the adjacent Unit 1 (Coal) ST Condenser CW discharge canal. The Cooling tower blowdown is also directed back to the same discharge canal further downstream.

EGR – Exhaust Gas Recirculation directs a portion of the HRSG exhaust flue gas back to the inlet of the GT, resulting in higher CO_2 concentrations in the GT exhaust, allowing the CCS to be lower cost and more efficient. The EGR system takes HRSG flue gas flow from the HRSG exhaust before the CCS has cooled the flue gas. The EGR system includes a booster fan, to overcome the EGR system flue gas pressure drop, and direct contact cooler (DCC) to cool the EGR flue gas, a mixer to mix the EGR outlet flue gas with eh GT inlet fresh air, and a louvre damper to isolate the flue gas path when required. The EGR DCC cools the flue gas below its dew point, condensing a stream of the water. That DCC condensate will contain some impurities primarily from the fuel burned in the GT. The EGR condensate will be routed directly to the new cooling tower without any pre-treatment. The initial water inventory of the EGR DCC loop is DW to reduce the impurities that may be introduced to the GT compressor. During extreme hot ambients it is possible that no water is condensed in the DCC, which may require small amounts of continuous DW makeup to allow the EGR DCC continuous blowdown to limit cycles of concentration in the EGR DCC cooling water.

CCS-NGCC Operating Philosophy
2x1 7FA retrofit at SoCo Plant Barry

CCS:

DCC – Direct Contact Cooler cools

Flue Gas Fan -

Absorption Tower –

Stripper Tower –

CO2 Compressors –

CCS CCW – CCS Cooled Cooling Water System

The existing plant is operated normally up to base load without use of the HRSG duct burner. Originally the plant was designed with some Steam Turbine excess capacity that could be leveraged for intermittent peaking as demand required. The HRSG duct burners were sized for large amounts of duct firing to both support the intermittent ST peaking and during times of extraordinary demand to provide high pressure steam to the GT for Steam Injection Power Augmentation (SIPA). Subsequent changes to the GT have produced more baseload steam and have virtually eliminated the intermittent ST peaking capability, but the SIPA capability remains.

All of this historic operation description is to put the operating philosophy into perspective with the incorporation of CCS.

The application of CCS to the NGCC changes performance in 2 fundamental ways: 1st it reduces the Steam Turbine output by over 40MW due to the steam extraction needed to operate the CCS reboiler that would otherwise contribute to the ST Generator output; 2nd it adds a significant amount of new auxiliary loads of over 30MW including the new CO_2 compressors and the CCS flue gas fan. The CCS is being integrated into Barry 6 in such a way that if the CCS is shut down, the ST will regain most of the 70+MW of CC net output. To compensate for this large capacity reduction, the NGPP/CCS integration includes a recommendation of a GT upgrade of .05 Compressor with DLN 2.6+ Flex and AGP Tech HGP that will recover, on average, all of the lost plant capacity (existing average NGCC Baseload capacity is 551MW, new average upgraded NGCC/CCS Baseload capacity is 553 MW).

As the new NGCC/CCS operates with ~95% of CO_2 captured, the plant is anticipated to operate at high loads for >80% of the time. However, the load demand is still expected to vary and the NGCC/CCS plant will need to react to that varying load demand.

The new normal operating profile is expected to be:

- At or below CCS Baseload Demand –
  - operate NGCC with CCS ON
  - EGR ON if >70% GT load, optional <70% load
  - Evaporative Cooler (EC) ON for ambient temperatures above 50°F
  - **HRSG Duct Burner and SIPA OFF (permissive OFF)**
  - Maximum use of CO_2 (45Q) Tax Credit for Captured CO_2
  - No GT Maintenance Factor

- Above CCS Baseload demand (up to ~76MW above CCS Baseload)
  - Turn CCS OFF – into Hot Standby – gains >70MW of CC Net
  - Turn EGR OFF
  - Loss of CO_2 (45Q) Tax Credit for Captured CO_2
  - Keep Evaporative Cooler (EC) ON for ambient temperatures above 50°F
  - No GT Maintenance Factor
- More Above CCS Baseload demand (up to ~100MW above CCS Baseload)
  - Extend GT into Peak Airflow
  - Keep CCS in Hot Standby
  - Keep EGR OFF
  - Keep Evaporative Cooler (EC) ON for ambient temperatures above 50°F
  - Loss of CO_2 (45Q) Tax Credit for Captured CO_2
  - Modest CC Efficiency Loss
- Further Above CCS Baseload demand (up to ~125MW above CCS Baseload)
  - Extend GT into Peak Load, and then extended peak mode
  - Keep CCS in Hot Standby
  - Keep EGR OFF
  - Keep Evaporative Cooler (EC) ON for ambient temperatures above 50°F
  - Loss of CO_2 (45Q) Tax Credit for Captured CO_2
  - Modest GT Maintenance Factor
- Much Further Above CCS Baseload demand (up to ~150MW above CCS Baseload)
  - Keep GT in Extended Peak Mode
  - Engage HRSG Duct Burner
  - Add Steam to GT SIPA
  - Keep CCS in Hot Standby
  - Keep EGR OFF
  - Keep Evaporative Cooler (EC) ON for ambient temperatures above 50°F

The result of the new operating profile is that while the maximum potential load increase is substantially higher, the actual operation of the HRSG duct burner will be fewer hours per year, and well as fewer hours per year on SIPA, with lower corresponding impacts to GT maintenance factors. Also the result of the profile is that the operation of the CCS and EGR are mutually exclusive to the operation of the HRSG Duct Burner and GT SIPA.

There are several pre-requisites that result from the new configuration:

- Stable ST Operation with GT > MECL is required to operate EGR
- EGR operating is required for GT>70% load if CCS is ON
- EGR OFF is required to operate HRSG Duct Burner

CCS-NGCC Operating Philosophy
2x1 7FA retrofit at SoCo Plant Barry

HRSG Flue Gas Control

The HRSG exhaust is currently directed through the HRSG stack to the atmosphere. With the addition of CCS there are several additions required to the HRSG exit flue gas: Extraction for flue gas portion passing to EGR system with a modulating louvre damper; extraction for flue gas passing to CCS system with an open/close louvre damper; and an open/close stack louvre damper in the existing HRSG stack above the new flue gas extractions. This intent of the CCS and HRSG stack dampers are to be binary – that is one is expected to be 100% open and other will be fully closed. The flue gas either goes 100% to the existing HRSG stack or goes to the CCS system with the option of a controlled percentage going to the EGR system. In the event of a CCS upset the HRSG stack damper opens to safeguard HRSG exit pressure to avoid HRSG flue gas over-pressurization.

The EGR flue gas louvre damper is used to engage the EGR system and may be used to help limit flue gas flow rate through the EGR system. The EGR system is used to increase the CO2 concentration entering the CCS, limiting the maximum flue gas flow entering the CCS, and enhancing part-load NGCC efficiency. The maximum amount of EGR flow is dictated by the design of the EGR components and the operating limitations of the GT combustor. Details of the EGR system are given in a separate section, but the flue gas damper is described here. The EGR flue gas damper is NOT a part of any rapid response system, and it is expected to open and close at a relatively slow rate. While the primary control of the EGR flue gas flow rate is managed with the EGR variable speed flue gas booster fan, at low loads the control of the EGR flue gas flow will be managed by the EGR flue gas louvre dampers (with the EGR flue gas booster fan at its minimum speed). In the event of an EGR shutdown the EGR flue gas louvre damper returns to a closed position. During a GT shutdown, the EGR flue gas louvre damper is opened briefly during the GT purge cycle to purge the EGR cycle of potential combustible gasses and enabling a purge credit allowing for a faster re-start of the GT in the future.

The CCS flue gas louvre damper is used to engage and disengage the CCS system as well as isolation when the CCS system is OFF. The CCS flue gas louvre damper is binary – that is it is expected to be 100% open or it be fully closed. The CCS flue gas damper is NOT a part of any rapid response system, and it is expected to open and close at a relatively slow rate. In the event of protection from high flue gas pressure, the HRSG stack louvre damper is employed.

The HRSG stack louvre damper is used for 3 primary purposes: isolation of HRSG exhaust flow during CCS ON operation; safety mitigation in the event of HRSG exit elevated pressure, likely caused by malfunctioning CCS flue gas louvre damper or CCS flue gas booster fan; and thermal energy conservation of HRSG during GT/HRSG OFF shutdown periods. In normal operation the HRSG flue gas louvre damper is binary – that is it is expected to be 100% open or it be fully closed. This “normal” operation describes CCS OFF (100% Open), CCS ON operation (0% Open) and GT/HRSG OFF shutdown periods (0% Open). The HRSG stack louvre damper is binary – that is it can be commanded 100% open or 0% open. The HRSG stack damper is NOT a part of any rapid response system, and it is expected to open and close at a relatively slow rate (any rapid response is managed by GT IGVs, see below). During an upset event resulting in high HRSG exhaust pressure, the HRSG flue gas louvre damper will be commanded to a 100% open position. Note that for rapid response to the HRSG exhaust flue gas high pressure the GT IGVs will rapidly modulate partially closed providing faster relief to the rising HRSG exhaust flue gas pressure. After a brief period of GT IGV intervention, the GT IGV’s will slowly return to their normal position by which time the HRSG stack louvre damper will be fully open.

CCS-NGCC Operating Philosophy
2x1 7FA retrofit at SoCo Plant Barry

Steam Supply to CCS/Reboilers

The NGCC LP steam supply to the CCS Reboilers regulates pressure and temperature of the CCS LP supply header via 3 supply connections for steam, use of 2 pressure control valves for pressure control, and 2 water spray attemperators for steam temperature control. There is a single CCS LP steam header providing steam to both trains of CCS (1 behind each GT/HRSG). The steam header splits into 2 lines near the CCS reboilers.

The CCS Reboiler requires a large amount of process steam to operate the CCS process. While the CCS steam demand flow is proportionate to the CO_2 flow the required steam pressure is constant. The result of this constant steam pressure requirement is that at very low ST loads, the LP crossover extraction is unable to hold the required pressure, and the steam supply must come from a higher pressure source – the HP steam header in this case.

The CCS steam demand is quite large – almost 50% of the total steam generated in the 3-pressure HRSGs. To minimize the performance penalty in lost ST output, the steam should be extracted as much as possible in the following order:

1) HRSG LP Superheater outlet – results in holding LP SH outlet at constant ~75 psia pressure
2) ST Crossover – requires holding ST IP outlet to ~75 psia for as much of the load range as possible
3) HP Steam Header – requires pressure letdown and attemperation to ~500°F

The LP Superheater can be connected directly to the CCS LP supply header, which is maintained at a constant pressure. In order to maintain the CCS LP supply header, the primary control is managed by the new LP crossover butterfly valve, and the secondary pressure control in by the HP to CCS bypass valve. The LP crossover butterfly valve controls to a CCS LP supply header pressure of 75 psia, couples with a minimum valve open position of 30%. The LP Crossover Butterfly valve is NOT a rapid response device and is intended to open and close at a relatively slow pace. If the LP crossover butterfly valve hits the limited 30% open, the resulting steam pressure upstream of the LP crossover butterfly valve will drop below 75 psia. If the pressure drops below 65 psia, the HP to CCS bypass steam valve will open and throttle to maintain 65 psia in the CCS LP supply header. As the HP supplies more and more of the steam demand, the Non-return valves in the LP extraction from the LP crossover will automatically close to prevent steam from reverse flowing into the LP crossover. As the crossover pressure downsteam of the LP Crossover butterfly valve goes below XX psia, the LP Crossover Butterfly valve is commanded to 100% open to restore some performance to the ST output. All operation below XX psia pressure after the LP Crossover Butterfly valve will have steam supplied by the HP to CCS bypass. If the plant load increases such that the pressure after the LP Crossover Butterfly valve goes above XX psia, the LP Crossover Butterfly valve will resume operation maintaining the pressure upstream of the LP Crossover Butterfly valve at 75 psia with a minimum 30% valve opening.

The HP to CCS Bypass take HP steam from combined 6A/6B HP steam header (~1050°F steam) and after passing thru a pressure control valve, is conditioned with a spray water attemperator to ~500F to match the conditions of the steam from the HRSG LP SH exit. The HP to CCS Bypass PCV is modulated to maintain the CCS LP supply header at 65 psia, and is NOT a rapid response device and is intended to open and close at a relatively slow pace.

After the CCS LP supply header is provided with a combination of steam from the HRSG LP SH and either the LP Crossover or the HP to CCS bypass, the CCS LP steam passes thru a final water spray attemperator where the temperature is dropped to 328-333°F (20-25°F above saturation). As the CCS process demands more or less steam flow, the CCS LP supply header pressure will naturally fall or rise, resulting in automatic reactions from the HP to CCS bypass valve (at low loads) or the LP Crossover Butterfly valve (at higher loads) to maintain the CCS LP header pressure.

Steam Condensate Return from CCS

The Steam Condensate return from the CCS reboilers includes all of the flow supplied as LP steam to the CCS Reboilers. There are 2 CCS reboilers (1 behind each GT/HRSG). Each of the 2 reboilers has a steam condensate line. The 2 steam condensate lines are combined into a single steam condensate line near the CCS reboilers. The condensate is returned at 125 psig (min 100/max 150 psig)/276°F. The steam and then condensate are never exposed to higher pressure gases, so there is no need for deaeration or chemistry control on the returning condensate. The steam condensate will be returned to the steam condenser hotwell. This is labeled as steam condensate to clearly differentiate from the DCC condensate that contains flue gas contaminants.

Cooling Water System

The Cooling Water System for the CCS includes a new cooling tower, and multiple plate and frame CCW heat exchangers with corresponding CW and CCW pumps. When the CCS system is engaged, the heat load on the existing cooling tower is reduced by nearly 50%, but the existing cooling water (CW) and cooled cooling water (CCW) flows are NOT diverted in whole or in part to the new CCS and EGR system, to keep the fully CW/CCW capability available for any upset event that would rapidly call upon that system. Note that while the existing CW system is not used for the new EGR/CCS, during CCS operation, the demand for makeup water to the existing cooling tower will be reduced by ~50%. The plan is to expand the current makeup water supply capability, so any reduction is demand of the current cooling tower partially offsets the increase in new cooling tower makeup water demand.

The new CW system includes a single new cooling tower with circulating water pumps to direct cooling water from the new cooling tower basin to a number of cooled cooling water heat exchangers for the EGR system, the core CCS system, and the CCS CO_2 compression system. Some of these CCW heat exchangers are cooling water (ie. DCC), while others are cooling process fluids, such as in the CCS absorber and CO_2 compressor intercoolers. The new cooling tower gets its makeup water from the adjacent coal ST CW discharge canal (same source as makeup for the current cooling tower). Likewise, the blowdown from the new cooling tower is directed to the same coal ST CW discharge canal, similar to the current cooling tower. The condensate from the EGR DCC and the CCS DCC that is condensed as the flue gas is cooled below its dew point is directed to the basin of the new cooling tower.

The largest CCW demand is the CCS Direct Contact Cooler(DCC), followed by the EGR DCC. , and then multiple CCW demands for the CCS absorber, stripper, and CO_2 compressor trains.

CCS-NGCC Operating Philosophy
2x1 7FA retrofit at SoCo Plant Barry

EGR System

The EGR system reintroduces a portion of the HRSG exhaust gas back into the GT air inlet after required cleaning and cooling. This increases the CO2 concentration and reduces the exhaust flow to the CCP, allowing a more optimal sizing of the CCP (Carbon Capture Plant) equipment. From a high level, the EGR system consists of the following equipment:

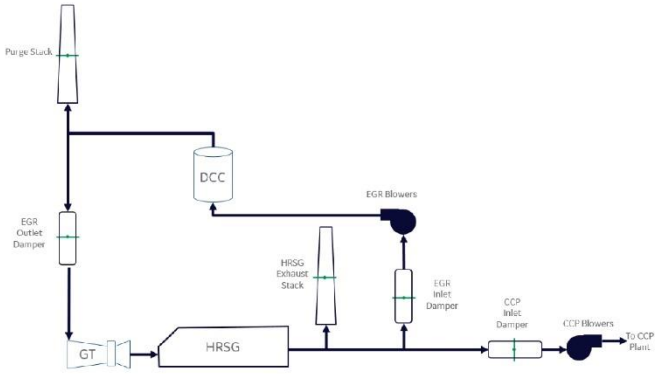

- HRSG Exhaust Stack – The typical GT combined cycle exhaust stack, outfitted with a modulating stack damper. This stack is utilized for running without the EGR system, unabated operation, and in upset conditions. The stack damper will be modulated to control backpressure.
- CCP Inlet Damper – This damper provides the means for allowing or shutting off flow to the CCP.
- CCP Blowers – These blowers control the flow to the CCP.
- EGR Inlet Damper – This damper provides the means for allowing or shutting off flow into the EGR loop.
- EGR Blowers – These blowers control the flow through the EGR loop.
- Direct Contact Cooler (DCC) – The DCC cools the EGR loop temperature before reintroduction to the GT inlet. The DCC also removes impurities within the exhaust flow. Blow down and make up circuits in the DCC system ensure water quality.
- Purge Stack – The purge stack is used to purge the EGR system prior to operation.
- EGR Outlet Damper – This damper provides the means for allowing or shutting off flow from the EGR loop to the GT inlet.

The EGR system is only engaged with the GT above Minimum Emissions Compliance Load (MECL) and with the CCS system engaged. The EGR system is required to be engaged for GT operation above 70% load with the CCS system engaged to limit maximum flue gas flow to the CCS.

During operation of the EGR, the 2 primary control mechanisms are the EGR flow rate and EGR flue gas outlet temperature. Both EGR flow ratio (Percent of GT exhaust flow recirculated) and EGR flue gas temperature are controlled to a schedule based on GT load. In general, at higher loads, the EGR is controlled to higher flow ratios and lower flue gas outlet temperatures. The primary objectives for EGR control are GT combustion stability (EGR flow) and NGCC plant output/efficiency value (EGR outlet temp). It is NOT the intent of the EGR system to a rapid response system. As such the control of EGR flow and outlet temperature will be relatively slow with the exception of emergency trip of the system.

The gas composition at the EGR outlet is monitored and multiple operating limits are imposed for both EGR flow and outlet temp, such as if elevated levels of contaminants may reduce the EGR flow to protect the GT compressor, low oxygen levels may reduce EGR flow to protect GT combustor stability, and elevated variances of EGR outlet temp versus ambient air temp may change EGR outlet temp target.

EGR Operation

During operation the EGR system mass flow is subject to multiple operating boundaries such as minimum and maximum blower mass flow limits, combustor inlet O2, and EGR flow velocity. To ensure these boundaries are met across the EGR operating range a method of direct boundary control will be used. Each boundary will consist of a PI controller varying EGR mass flow demand to meet the boundary limit. Within the primary operating limits there is sometimes room to optimize additional parameters provided the primary operating boundaries are satisfied.

A selection priority structure determines which boundary is adhered to when all objectives cannot be met. Figure 1 illustrates an example of this structure. Exhaust CO2 concentration is a target optimization parameter that will only be selected if the EGR mass flow demand is not outside the EGR mass flow demands set by the higher priority boundaries down stream in the selection criteria. With this method, the further to the right in the diagram a boundary resides, the higher priority in the selection structure it is. This structure allows the EGR Mass flow to be optimized when possible while still adhering to real time operating boundaries based on process feedback.

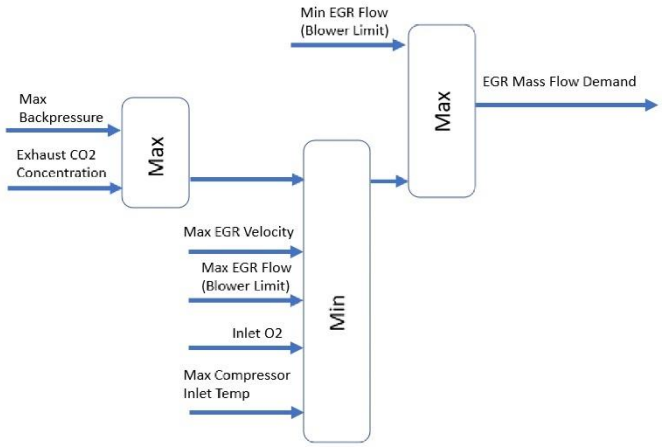

Figure 1 EGR Boundary Priority Selection

From the priority structure the selected EGR mass flow demand is then passed to the blower control. The blower control module will adjust the variable speed blower and radial vanes to achieve the target EGR mass flow.

EGR Operating Modes

EGR Active – No Abatement

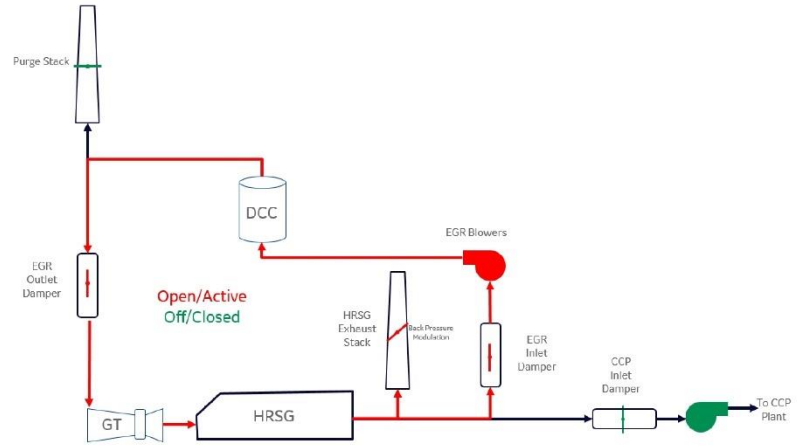

Figure 2 EGR Active - No Abatement

When GT exhaust flow is sufficient and the GT combustor is in a mode that can accept EGR flow, EGR operation can be initiated without flow to the CCP plant for abatement. In this mode of operation, the HRSG exhaust stack damper will modulate to control back pressure ensuring a sufficient balance between flow through the EGR loop and exhaust flow though the stack.

EGR Active – Abatement

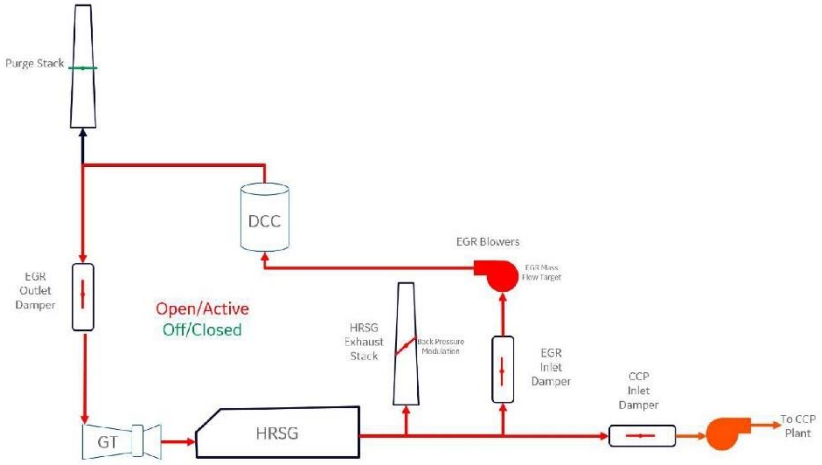

Figure 3 EGR Active - Abatement

With EGR active and exhaust flow to the CCP the CCP inlet damper is opened and the CCP blower begins operation the backpressure will reduce. As the resulting backpressure will be less than the HRSG exhaust stack damper target and the damper will modulate closed. The HRSG exhaust stack damper will remain in back pressure modulation operation in order to open in the event of increased backpressure in the system.

EGR Disabled – No Abatement

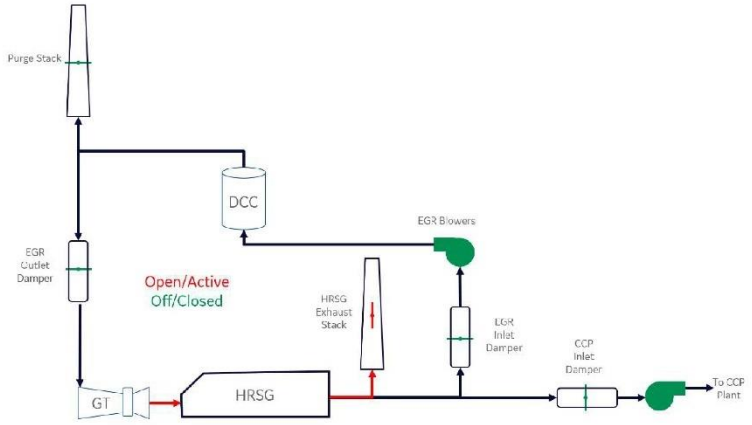

Figure 4 EGR Disabled - No Abatement

For operation without EGR or exhaust abatement, the EGR system is isolated by closing the EGR Inlet and Outlet Dampers and the CCP plant is isolated by the closed CCP inlet damper. The HRSG Exhaust Stack damper is opened completely and all exhaust flow from the GT is directed out the HRSG stack.

EGR Disabled – Abatement

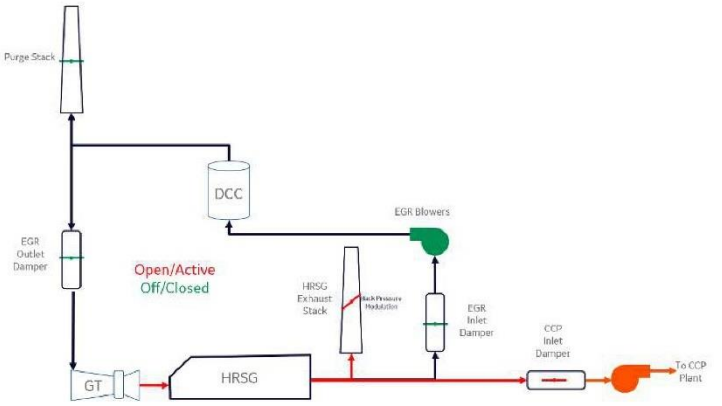

Figure 5 EGR Disabled - Abatement

Operation without EGR but exhaust flow to the CCP is accomplished through isolating the EGR system by closing the EGR Inlet and Outlet Dampers while the CCP inlet damper is open, allowing exhaust flow to the CCP plant. The CCP plant blower will control flow to the CCP plant while the HRSG Exhaust Stack damper will operate in backpressure modulation mode, venting off the remaining exhaust flow through the HRSG Exhaust Stack. During part load operation it is possible for the GT exhaust flow to be reduced enough that all flow is directed to the CCP and the HRSG Exhaust Stack damper fully closes due to the reduced backpressure.

Demineralized Water System

The Demineralized Water System includes a demineralized water (DW) storage tank and a DW distribution system. The primary demand for DW is delivery to the existing ST condenser. The new EGR/CCS system will have 2 primary new demands for DW supply: the EGR DCC cooling water loop, that is initially charged with DW and may require DW makeup during times of extreme high ambient temperature with EGR operation; and CCS Absorber water wash used to remove amine carryover in the absorber flue gas exhaust stack to ambient. The source of DW suppy to the DW storage tank is from the adjacent coal ST facility.

CCS Core System

The Core CCS System includes:

Flue Gas Pre-Treating - The Flue Gas enters the CCS Plant at nearly atmospheric pressure. In the DCC (Direct Contact Cooler) Column the flue gas is cooled by circulating process water, which is pumped by the DCC Circulation Pump to the top of the DCC Column whereas the flue gas enters at the bottom of the column. Thus, water passes in a countercurrent direction to the flue gas and removes the heat from the gas stream. Circulating process water is cooled in DCC plate and frame Cooler against cooling water that is supplied from the new CCS Cooling Tower. In the process of cooling the flue gas passing thru the DCC, a portion of the water moisture in the incoming flue gas is condensed and routed to the CCS Cooling Tower basin via liquid level control in the sump of the DCC Column.

The flue gas flow to the capture plant is pressure controlled by the Flue Gas Blower, which provides necessary flue gas pressure for the downstream CCS equipment. After leaving the DCC Column the cooled flue gas is fed by the Flue Gas Blower to the bottom of the Absorber Column.

CO_2 Absorption – The CO_2 is captured from the cooled flue gas In the Absorber Column, where the flue gas passes in a counter-current flow to the liquid washing agents. The Absorber Column consists of four different sections. The lower two sections are designed for CO_2 absorption and are operated with the amine-based washing agent. In the CO_2 absorption part 95% of the CO_2 is captured from the flue gas. The upper two segments are designed for emission control. They are divided into a "dry" bed section (lower section) and a backwash section (upper section). Both upper sections are conceived to reduce impurities, e.g., amine traces in the gas stream.

The entering flue gas to the Absorber Column passes upwards through the absorption beds where two packed bed sections are promoting the mass transfer of CO_2 from the gas into the absorbing

amine wash liquid. The amine wash liquid flow rate is controlled based on the CO_2 flow rate measured upstream the Absorber Column. A high-performance packing with low pressure drop and high mass transfer capacity is installed in the absorption sections. The two beds in the upper part of the Absorber Column target precipitation of absorbing solution carried over from the absorber beds. In the upper column beds, process water passes in a counter-current flow to the upstreaming gas to reduce and control emissions in the gas flow leaving the Absorber Column.

The emission control system consists of a "dry" bed and a backwash section where the wash water passes in a counter-current flow to the flue gas recapturing entrained droplets of amine solution. The wash water is circulated by the Absorber Wash Water Pump from the first chimney tray through the water-cooled Absorber Wash Water Cooler. Demineralized water is supplied to the wash water cycle to avoid the accumulation of amines in the water and to adjust the water balance of the plant.

CO_2-lean treated gas leaves the Absorber Column at the top and is vented to the atmosphere.

The CO_2-enriched absorbent solution is withdrawn at the bottom of the Absorber Column and is fed by the Rich Solution Pump via the Rich/Lean Solution Heat Exchanger to the Rich Solution Flash Vessel. The Rich Solution flow is controlled via control valve, using the CO_2 flow (calculated from CO_2 concentration and flue gas flow) of the flue gas as control variable. In the Rich/Lean Solution Heat Exchanger Rich Solution is heated by Lean Solution leaving the Stripper Interstage Heater.

Regeneration – The Rich Solution Flash Vessel is the primary mechanism for reducing and controlling the levels of Oxygen in the final CO_2 needed to satisfy downstream pipeline specifications. The small amounts of dissolved gas components like Oxygen, Nitrogen etc. are separated from the CO_2 in the Rich Solution Flash Vessel and recycled back to the Absorber Column. The flash vessel pressure is regulated via pressure control valve located at the gas outlet of the flash vessel. The Rich Solution Booster Pump transfers the preheated Rich Solution from the Rich Solution Flash Vessel to the Stripper Column. The solution flow rate is regulated via liquid level control in the Flash Vessel.

The Stripper Column has three packed bed sections - two lower sections designed as stripping segments, and the top section as the wash section running with process condensate from the Stripper Reflux Drum.

The hot rich solution enters the Stripper Column and passes in a counter-current flow to the ascending vapor, generated in the Stripper Reboiler. The necessary heat in the reboiler is provided by low-pressure steam supplied from the Steam Turbine and HRSG in the CCPP with the steam condensed in the Stripper Reboiler and the condensate returned to the CCPP Steam condenser.

Exiting the Stripper Column, the wet CO_2 gas is cooled in the Stripper Condenser against Cooling Water with the Condensate separated in the Stripper Reflux Drum and returned to the top of the Stripper Column by the Stripper Reflux Pump with the raw CO_2 gas fed to the CO_2 Compressor Unit.

Regenerated Amine Solution leaves the Stripper Column at the bottom and is pumped by the Lean Solution Pump to Stripper Interstage Heater where the lean Solution is cooled against the amine solution from the upper regeneration bed of the Stripper Column. The precooled lean amine solution is further cooled in the Rich/Lean Solution Heat Exchanger by heat exchange with rich solution coming from the Absorber Column and the Lean Solution Cooler against cooling water before it finally enters the Absorber Column.

A portion of the Lean Solution is routed over the Mechanical Filter and the Activated Carbon Filter, which are used to eliminate solid matters (from solution degradation or entrained from flue gas).

The Stripper Column pressure is regulated via suction pressure control of the CO_2 Compressor.

CO_2 Compression and Drying - The CO_2 raw gas from regeneration section of the PCC plant is routed to the CO_2 Compression and Drying section where it is compressed, cooled, and dried.

The CO_2 compressor comprises approximately 6 compression stages. After 4th stage of compression, the CO_2 gas is cooled in the CO_2 Chiller Unit against a refrigerant to condensate water in the gas stream. The generated condensate is separated in the Water Separator and sent to the Condensate Knock Out Drum. The condensate formed due to compression and cooling is collected in the Condensate Knock Out Drum. In the Condensate Knock Out Drum the CO_2 dissolved in the condensate is separated and vented to the atmosphere. The condensate is routed to the CCS Cooling Tower by the Condensate Knock Out Drum Pump.

The compressed and chilled CO_2 gas is fed back to the CO_2 Compressor Unit to the 5th stage. It is further compressed to the required pressure and cooled against cooling water.

The product CO_2 gas is routed to the battery limit

CCS-NGCC Operating Philosophy
2x1 7FA retrofit at SoCo Plant Barry

Process Flow Diagrams

EGR

This space intentionally left blank

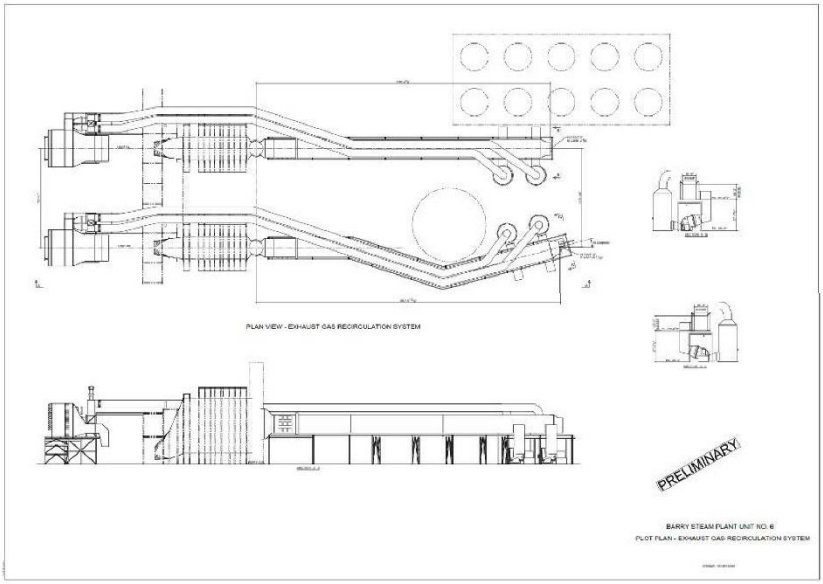

CCS-NGCC Operating Philosophy
2x1 7FA retrofit at SoCo Plant Barry

CCS

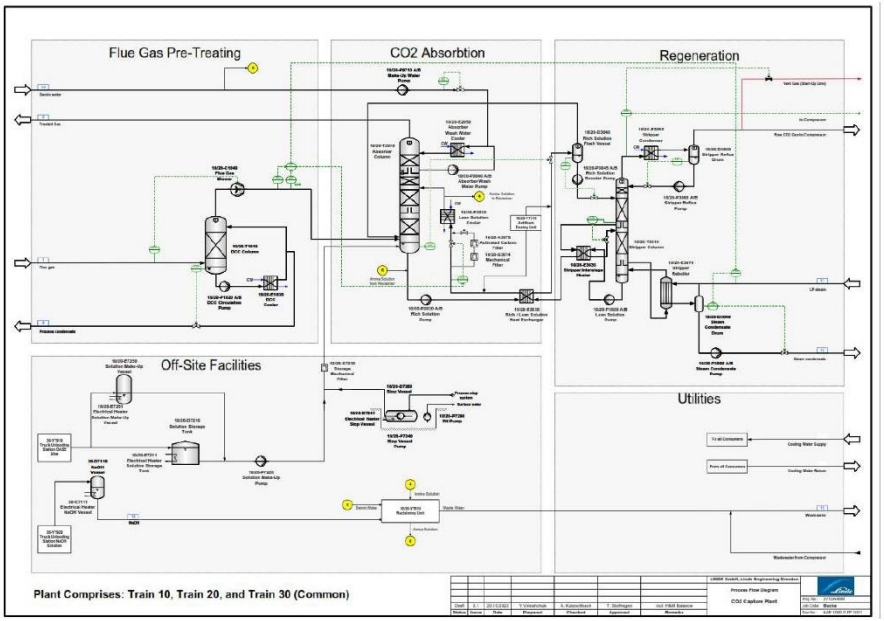

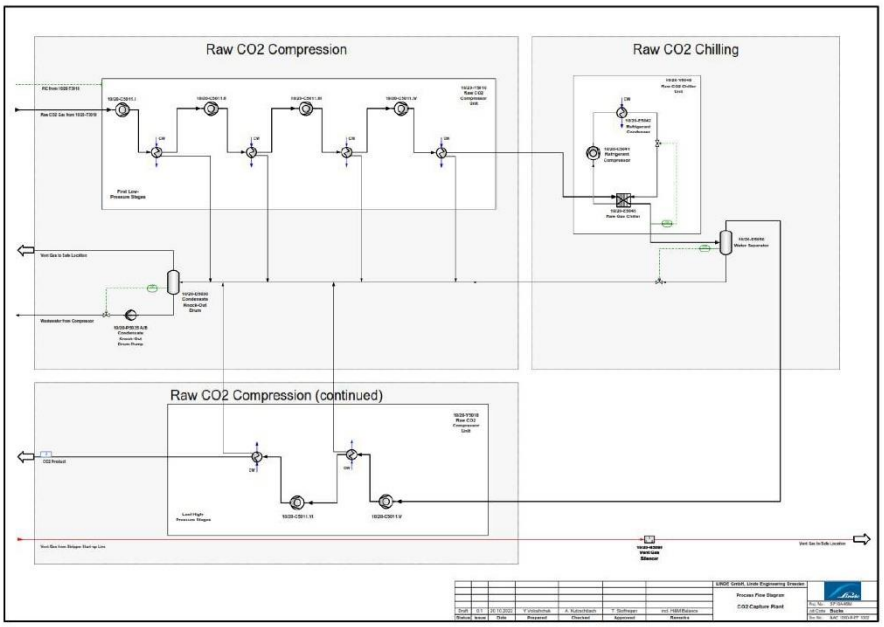

CCS-NGCC Operating Philosophy
2x1 7FA retrofit at SoCo Plant Barry

NGCC/EGR/CCS

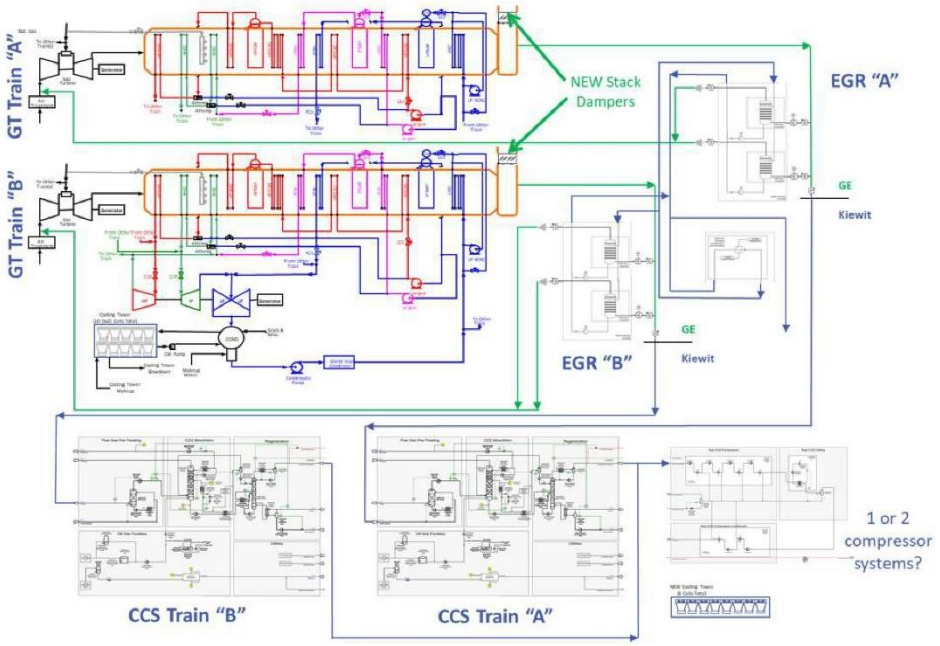

NGCC/CCS Mass and Heat Balances

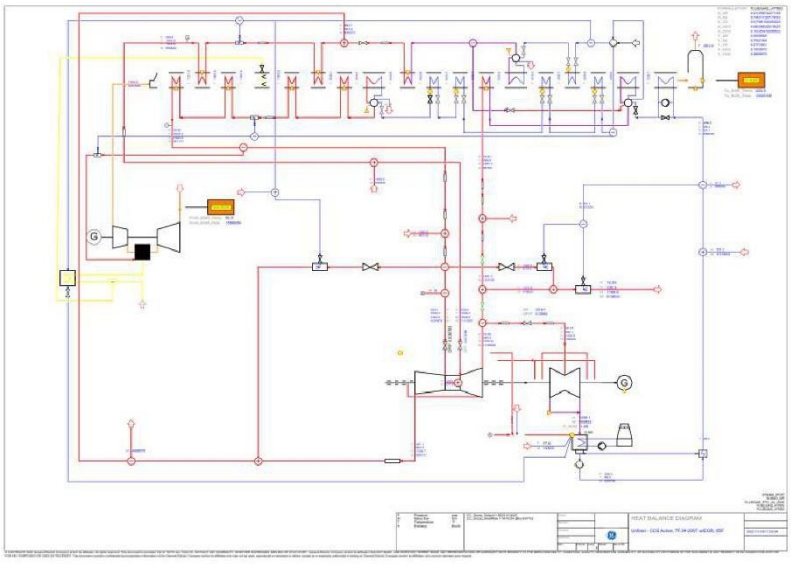

CCS-NGCC Operating Philosophy
2x1 7FA retrofit at SoCo Plant Barry

		7F.04-200Tech, CCS ON & 40%EGR				
		25F	40F	59F, EC ON	65F EC ON	95F EC ON
Wet Bulb Temp	deg F	29.44	36.87	54.80	59.94	77.09
GT Power Output	KW per GT	217,423	215,983	212,113	210,097	202,639
GT Heat Rate	Btu/kw-hr	9,039	9,097	9,172	9,216	9,391
GT Exhaust Flow	lb/hr	4,091,706	4,091,701	4,091,690	4,087,895	4,064,562
GT Exhaust Temperature	F	1,145	1,158	1,163	1,164	1,170
GT Fuel Temperature	F	80.0	80.0	80.0	80.0	80.0
GT Exhaust Molecular Weight		28.653	28.61	28.50	28.46	28.29
GT Exhaust Composition						
Ar	mol%	0.0091	0.0091	0.0090	0.0090	0.0088
N2	mol%	0.7657	0.7623	0.7549	0.7521	0.7398
O2	mol%	0.0719	0.0713	0.0711	0.0710	0.0700
CO2	mol%	0.0684	0.0682	0.0673	0.0670	0.0658
H2O	mol%	0.0849	0.0891	0.0977	0.1010	0.1156
HRSG Flue Gas to CCS						
Gas Outlet Flow	lb/hr	2455024	2455021	2455014	2452737	2438737
Gas outlet Pressure	psia	14.7	14.7	14.7	14.7	14.7
Gas Outlet Temperature	F	203.9	201.6	201.8	203.0	209.9
CO2	lb/hr	257756	257710	255183	253965	249600
Steam Extraction to CCS						
Flow	lb/hr	623,904	623,791	617,676	613,603	604,161
Pressure	psia	72.52	72.52	72.52	72.52	72.52
Temperature	F	330.32	330.32	330.32	330.32	330.32
Throttle Extraction to CCS						
Flow	lb/hr	23000	60000	80000	85000	97000
Pressure	psia	72.519	72.519	72.519	72.519	72.519
Temperature	F	330.319	330.319	330.319	330.319	330.319
EGR						
EGR H2O Condensate Flow	lb/sec	21.4	20.8	19.2	18.6	15.2
EGR Flow to Inlet	lb/sec	433.2	433.9	435.4	435.6	436.4
EGR Total Flow from Exhaust	lb/sec	454.6	454.6	454.6	454.2	451.6
EGR Inlet Temperature	F	45	58.9	77.0	81.9	99.1
Comp Inlet Composition						
Ar	mol%	0.0095	0.0095	0.0094	0.0093	0.0092
N2	mol%	0.7975	0.7939	0.7858	0.7827	0.7693
O2	mol%	0.1584	0.1575	0.1561	0.1556	0.1530
CO2	mol%	0.0286	0.0286	0.0282	0.0280	0.0275
H2O	mol%	0.0060	0.0105	0.0206	0.0244	0.0411
Compressor Inlet Flow	lb/sec	1105.0	1105.0	1105.2	1104.3	1098.2
Compressor Inlet Temp	F	32.8	47.4	65.1	70.2	88.4
Compressor Inlet RH	%	0.944	0.937	0.964	0.959	0.887
Plant Performance						
GT Output	kW	217,423	215,983	212,113	210,097	202,639
ST Output	kW	175,408	179,584	182,638	183,119	183,120
Plant Gross Output	kW	610,255	611,551	606,864	603,313	588,397
Plant Aux Loads	kW	8,622	8,717	8,729	8,718	8,662
Plant Net Output	kW	601,633	602,833	598,135	594,594	579,735
Plant Gross Heat Rate	Btu/kWhr	6,440.7	6,425.9	6,411.9	6,418.8	6,468.3
CCS Aux Loads						
CO2 Capture Process	MWe	18.751	18.751	18.751	18.739	18.661
CO2 Compression	MWe	17.229	17.227	17.078	17.006	16.749
Plant Net Output incl CCS Loads	kW	565,652	566,856	562,306	558,850	544,324
Plant Net Heat Rate incl CCS Loads	Btu/kWhr	6,948.6	6,932.6	6,920.0	6,929.5	6,992.1
weighting factors		2%	6%	23%	23%	47%
Plant Net Output incl CCS Loads	kW		553,417		weighted average	
Plant Net LHV Heat Rate incl CCS Loads	Btu/kWhr		6,957			

CCS-NGCC Operating Philosophy
2x1 7FA retrofit at SoCo Plant Barry

7F.04 200Tech, CCS ON & 40%EGR

			25F	40F	59F, EC ON	65F EC ON	95F EC ON	
	Wet Bulb Temp	deg F	29.44	36.87	54.80	59.94	77.09	
			25F	40F	59F, EC ON	65F EC ON	95F EC ON	
HP Throttle	HP Steam Inlet Flow	lb/h	1,036,725	1,035,706	1,034,431	1,034,879	1,035,644	
	HP Steam Inlet Pressure	psia	1849.1	1852.9	1852.4	1853.5	1857.0	
	HP Steam Inlet Temperature	°F	1013.2	1019.9	1021.8	1022.2	1025.0	
HP Bowl	HP Steam Bowl Flow	lb/h	1,036,725	1,035,706	1,034,431	1,034,879	1,035,644	
	HP Steam Bowl Pressure	psia	1832.9	1836.7	1836.2	1837.2	1840.7	
	HP Steam Bowl Temperature	°F	1012.3	1019.1	1021.0	1021.4	1024.1	
HP_Exit	HP Steampath Exit Flow	lb/h	1,008,959	1,007,967	1,006,729	1,007,162	1,007,914	
	HP Steampath Exit Pressure	psia	469.4	470.4	471.0	470.2	472.7	
	HP Steampath Exit Temperature	°F	657.5	663.1	665.0	664.9	667.9	
Cold Reheat	Cold Reheat Flow	lb/h	1,000,920	999,936	998,695	999,141	999,862	
	Cold Reheat Pressure	psia	466.7	467.2	467.9	467.1	469.6	
	Cold Reheat Temperature	°F	657.2	662.7	664.7	664.5	667.5	
Hot Reheat	Hot Reheat Flow	lb/h	1,115,699	1,113,917	1,114,198	1,113,657	1,118,026	
	Hot Reheat Pressure	psia	438.7	439.7	440.3	439.6	442.1	
	Hot Reheat Temperature	°F	1033.8	1044.5	1048.2	1049.4	1049.9	
IP Bowl	IP Steam Bowl Flow	lb/h	1,143,465	1,141,655	1,141,900	1,139,375	1,145,756	
	IP Steam Bowl Pressure	psia	435.5	436.5	437.1	436.4	438.9	
	IP Steam Bowl Temperature	°F	1030.5	1041.1	1044.8	1046.0	1046.5	
IP_Exit	IP Steam Exit Flow	lb/h	1,136,306	1,134,523	1,134,777	1,132,256	1,138,634	
	IP Steam Exit Pressure	psia	72.52	72.52	72.52	72.52	72.52	
	IP Steam Exit Temperature	°F	575.4	582.9	585.2	586.6	585.8	
XO Butterfly Valve	Butterfly Valve %DP	-	42.4%	39.3%	36.6%	35.8%	33.8%	
	Butterfly Valve DP	psi	30.70	28.41	26.50	25.91	24.42	
LP_Bowl	LP Steam Inlet Flow	lb/h	735,401	751,615	783,104	797,640	818,137	
	LP Steam Inlet Pressure	psia	41.42	43.68	45.56	46.15	47.61	
	LP Steam Inlet Temperature	°F	571.0	578.9	581.6	583.1	582.4	
LP_Exhaust	LP Steam Outlet Flow	lb/h	716,590	752,799	784,286	793,822	819,319	
	LP Steam Outlet Pressure	psia	0.305	0.395	0.552	0.619	0.907	
	LP Steam Outlet Temperature	°F	65.0	72.5	82.7	86.2	98.5	
Condenser	Condenser Duty	Btu/h	742,261,478	773,886,623	781,470,124	789,282,531	813,074,763	
	Condenser Exit Temperature	°F	65.0	72.5	82.7	86.2	98.5	
	Condenser Exit Pressure	psia	0.305	0.395	0.552	0.619	0.907	
CCS Extraction	CCS Extraction Flow	lb/h	623,904	623,791	617,676	613,603	604,161	
	CCS Extraction Pressure	psia	72.52	72.52	72.52	72.52	72.52	
	CCS Extraction Temperature	°F	330.3	330.3	330.3	330.3	330.3	
	CCS Extraction Energy	Btu/h	745,528,325	745,393,534	738,086,408	733,219,530	721,937,548	
CCS Spray	CCS Spray Flow	lb/h	55,053	52,633	50,355	49,603	47,756	
	CCS Spray Pressure	psia	250.0	250.0	250.0	250.0	250.0	
	CCS Spray Temperature	°F	67.4	74.8	84.9	88.4	100.7	
LP Admission Steam	LP Admission Steam Flow	lb/h	118,288	121,594	128,989	132,738	132,229	
	LP Admission Steam Pressure	psia	72.52	72.52	72.52	72.52	72.52	
	LP Admission Steam Temperature	°F	505.2	501.7	498.7	498.2	497.7	
ST Supply to CCS Extraction	ST Supply to CCS Extraction Flow	lb/h	427,563	389,564	358,332	346,263	327,176	
	ST Supply to CCS Extraction Pressure	psia	72.52	72.52	72.52	72.52	72.52	
	ST Supply to CCS Extraction Temperature	°F	575.5	583.1	585.4	586.8	586.0	
Throttle CCS Extraction	CCS Extraction Flow	lb/h	23,000	60,000	80,000	85,000	97,000	
	CCS Extraction Pressure	psia	72.52	72.52	72.52	72.52	72.52	
	CCS Extraction Temperature	°F	330.3	330.3	330.3	330.3	330.3	
	CCS Extraction Energy	Btu/h	27,483,652	71,696,482	95,595,310	101,570,017	115,909,313	

Steam Flow to CCS

	Total CCS Extraction Flow	lb/h	623,904	623,791	617,676	613,603	604,161	matches sum of 4 items below
		psia	72.52	72.52	72.52	72.52	72.52	
		°F	330.3	330.3	330.3	330.3	330.3	after attemperation
	CCS Flow from HRSG LP SH	lb/h	118,288	121,594	128,989	132,738	132,229	
		psia	72.52	72.52	72.52	72.52	72.52	
		°F	505.2	501.7	498.7	498.2	497.7	
	CCS Flow from ST Crossover (XO)	lb/h	427,563	389,564	358,332	346,263	327,176	
		psia	72.52	72.52	72.52	72.52	72.52	
		°F	575.5	583.1	585.4	586.8	586.0	
	CCS Extraction Attemperation Flow	lb/h	55,053	52,633	50,355	49,603	47,756	
	(excluding HP Throlte Attemepration)	psia	250.0	250.0	250.0	250.0	250.0	
		°F	67.4	74.8	84.9	88.4	100.7	
	CCS Flow from ST HP Throttle	lb/h	23,000	60,000	80,000	85,000	97,000	
	(after attemperation)		3.7%	9.6%	13.0%	13.9%	16.1%	extract from HP Throttle to maintain max ST throttle pressure
		psia	72.52	72.52	72.52	72.52	72.52	
		°F	330.3	330.3	330.3	330.3	330.3	

Assumptions
- GT 7F.04-200Tech
- EGR ON, 40%GT recirculation. Delta EGR inlet temp to ambient WB constant 22F across ambient range
- Constant 2.7GJ steam energy per tonne of CO2. Steam extraction at 5Bara
- ST HP and IP swallowing capacity increased by 15%. ST Mechanical feasibility has NOT been verified.
- As-required, HP throttle steam bypassed directly to CCS to maintain pressure within design limits. Bypassed steam attemperated as needed.
- As-required, ctwr fans reduced to maintain condensate enthalpy to allow LP drum to generate minimal steam

Startup

Startup of the NGCC is done the same as currently done, complete with heat soaks for HRSG and ST warming, as required. …

HRSG Purge

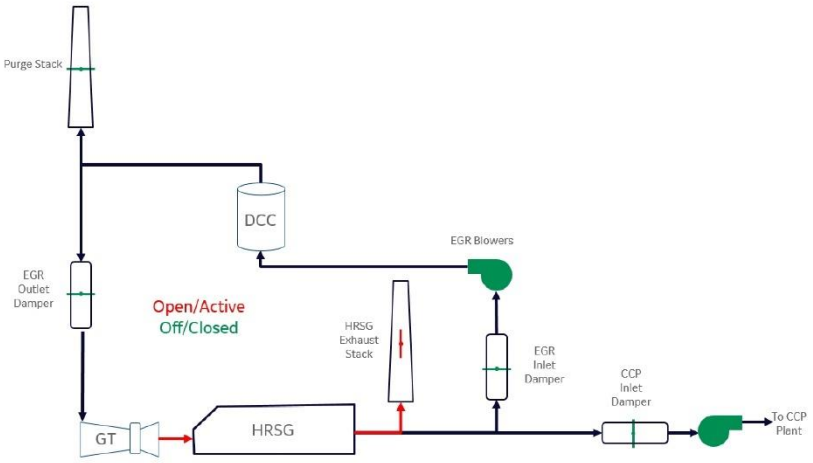

Figure 6 HRSG Purge

Purging of the HRSG will be accomplished through the typical GT Combined Cycle purging operation by utilizing the starting means to operate the GT at a target unfired speed with the HRSG Exhaust Stack Damper fully open. This will create desired airflow for the required amount of time to purge the GT exhaust and HRSG. During HRSG purging the EGR and CCP plant will be isolated from the GT exhaust flow path.

EGR Purge

EGR purge can occur after the HRSG purging is complete. The purge stack damper and EGR inlet damper will be opened and the HRSG Exhaust Stack damper will remain open. The EGR blowers will be used to achieve the target airflow for the required amount of time to purge the EGR loop. While exhaust gas temperature in the EGR circuit will be below required auto-ignition temperatures, purging of the EGR circuit is still required to prevent ingesting any unburned fuel back into the GT. The EGR circuit can either be purged after the HRSG during the startup or in the emissions compliant load range after initiating flow to the CCP.

EGR Purge on Startup

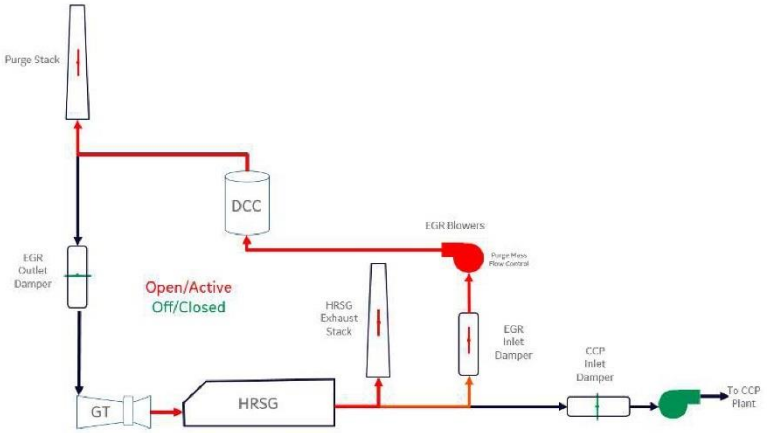

Figure 7 EGR Purge on Startup

During startup, after the HRSG is completely purged through the HRSG exhaust stack, the purge stack damper and the EGR inlet damper are opened and the EGR blowers target the required purge mass flow. Once the EGR circuit flow has achieved the required fresh air volume exchanges the EGR blowers are stopped and the purge stack and EGR inlet dampers are closed again. Then the GT can continue with the startup sequence by coasting down to firing speed for ignition.

EGR Purge at Load

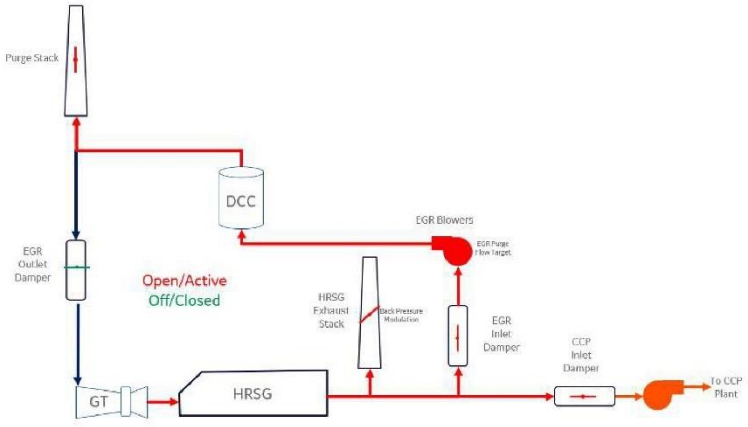

Figure 8 EGR Purge at Load

When the GT is operating above the Minimum Emissions Compliance Level (MECL) and flow to the CCP has been established EGR purge can be initiated. As the path to the CCP plant has been in operation all unburnt fuel in the common duct has already been removed. To purge the remaining EGR circuit, the HRSG exhaust stack damper remains in back pressure control, the purge stack and EGR inlet dampers are opened and the EGR blowers are started to target the required purge flow. Once the required volume has been exchanged through the purge stack and the EGR warmup requirement has been met, normal EGR operation can begin by opening the EGR outlet damper and closing the purge stack.

EGR Warmup

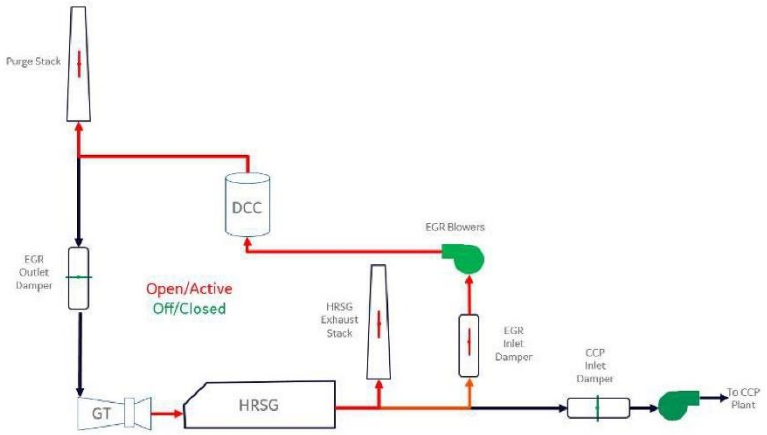

Figure 9 EGR Warmup

Opening the EGR inlet damper and purge stack damper with the EGR blowers off and free spinning allows flow through the EGR circuit for warm up and condensate removal. To speed up the warming process, the DCC cooling water flow will be kept in bypass. A delta temperature threshold between the exhaust flow temperature at the EGR inlet and the DCC outlet will determine when EGR warming is complete.

Upset Conditions

CCS Trip

CCP Blower Trip

In the event of a CCP blower trip the backpressure will increase. The rise in backpressure will trigger the HRSG exhaust stack damper to open if not already modulating to back pressure (as it is when EGR is disabled but exhaust flow is directed to the CCP) the damper will not likely open fast enough to reduce the backpressure spike. To account for this transient backpressure swing, the GT will close it's IGVs to reduce exhaust flow and if necessary, the EGR blowers will also reduce EGR flow to keep the

backpressure down till the HRSG exhaust stack damper can open enough to take over control of the backpressure. This will result in a transient loss of generator power. Once the HRSG exhaust stack damper is in control of backpressure the GT IGVs will open back up and the EGR blowers can resume the previous targeted flow.

EGR Trip

EGR Blower Trip

In the event of an EGR blower trip the backpressure will increase. The rise in backpressure will trigger the HRSG exhaust stack damper to open if not already modulating to back pressure (as it is when abatement is disabled but EGR is active) the damper will not likely open fast enough to reduce the backpressure spike. To account for this transient backpressure swing, the GT will close its IGVs to reduce exhaust flow and keep the backpressure down till the HRSG exhaust stack damper can open enough to take over control of the backpressure. This will result in a transient loss of generator power. Once the HRSG exhaust stack damper is in control of backpressure the GT IGVs will open back up.

ST Trip

Elevated HRSG Stack Pressure

GT Trip

In the event of a GT trip, the EGR purge stack and HRSG exhaust stack dampers are commanded fully open while the EGR blowers are commanded to stop. When the HRSG exhaust stack and EGR purge dampers are open the CCP inlet, EGR inlet and EGR outlet dampers are commanded closed.

GT Shutdown

In the event of a GT commanded shutdown, the EGR system is ramped to its minimum flow and the HRSG exhaust stack damper is opened. If exhaust is flowing to the CCP, the CCP will be commanded to shutdown as well. When EGR is at min flow, the EGR blowers will be commanded to stop and the EGR inlet and outlet dampers are commanded closed.

GT Load Rejection

In the event of a GT Load Rejection, the HRSG stack damper and EGR purge damper are commanded open and the EGR blowers are commanded to stop. When the HRSG stack damper and EGR purge damper are open, the EGR inlet, EGR outlet damper, and CCP inlet damper are commanded closed.

Protective Settings

Protection of the CCS is still in the early phase. However, at this point it is expected that operations will include a number of monitored parameters that will be used to protect the personnel, equipment, and operation of the CCPP and CCS.

Expected Protective Settings include:

EGR:

- Flue Gas Flow Rate (maximum and minimum)
- Flue Gas SO2/SO3 levels (maximum, for corrosion protection of GT compressor)
- Flue Gas outlet temp (max)
- Flue Gas outlet oxygen level (minimum, to protect GT combustor stability)

HRSG:

- HRSG flue gas outlet pressure (max)
- HRSG flue gas outlet CO2 level

ST:

- IP section exhaust steam temp (max, to protect ST casing)
- IP section exhaust steam pressure (max, to protect ST casing)
- LP section inlet steam pressure (max delta P from IP exhaust, to protect crossover butterfly valve)

CCS:

- Multiple protective setting expected – to be detailed later

2.5.9 HAZOP Review

A hazard and operability study is a structured and systematic review of a planned or existing process or technology for the purposes of identifying and assessing potential problems and dangerous situations that could pose a health or safety risk, an environmental risk, or a risk to other equipment.

A HAZOP study is completed by assessing the individual components of individual technologies and installations, for which deviations from the normal working process are defined. Dangerous states are identified and assessed based on the potential causes of deviations and their consequences, as well as safeguards and recommendations focused on eliminating or mitigating risks.

An ISBL HAZOP was performed for Barry Unit 6 by Linde experts from the fields of design, operation, management, maintenance, and other required component areas. The study was conducted on the process and was limited to the shortlist of major concerns identified for the equipment, vessels, and the control systems shown in the P&ID drawings.

Shortlist of major concerns:

- Operational upsets
- Leakages and ruptures
- Hazards to personnel and environment

The CO_2 plant consists of two identical trains (units 10 and 20) and commonly used facilities (unit 30). The HAZOP is based on the P&ID of train 10 plus commonly used facilities. Since there are no process deviations, one train is considered as an example for the HAZOP review. The found action items and recommendations were considered for all trains.

For the scope of the HAZOP, locked open (LO) or locked closed (LC) manual valves as well as spectacle blind and caps were not considered to be mis-operated. Also, manual block valves only used for maintenance issues were assumed to be in the right position for operating the plant.

The package units "CO_2 compressor unit", "CO_2 chiller unit", "antifoam dosing unit", "reclaiming unit", “truck unloading station NaOH solution” and “truck unloading station OASE® blue” were only considered on a high level with focus on the interconnections to the plant.

Most recommendations were closed by implementation in the design. Items still open have been documented and will be resolved during a later project phase.

2.5.10 3D Images of Integrated NGCC+CCS

Below are multiple 3D renderings of the integrated NGCC+CCS system. This model was collaboratively created by GEGP, Linde, Southern Company, and Kiewit. Existing equipment is in blue and new equipment is in green.

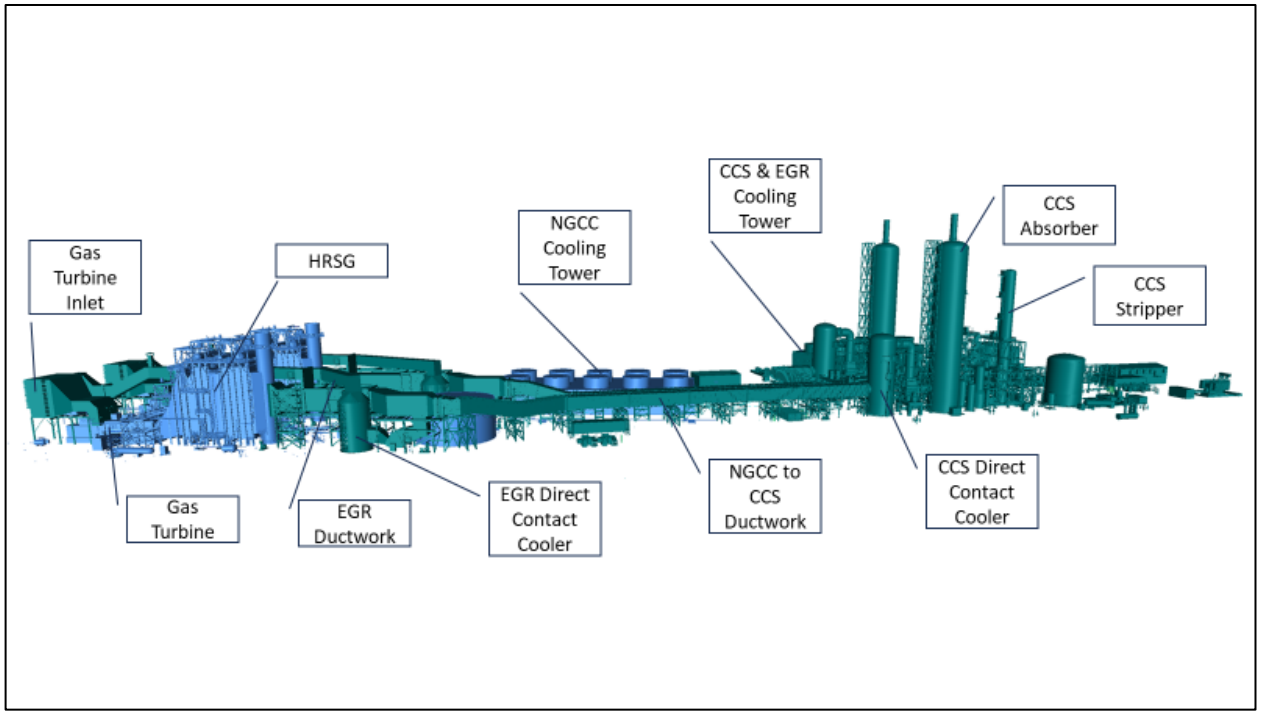

Figure 22: 3D Model of Integrated NGCC+ CCS – Elevation View with Labels

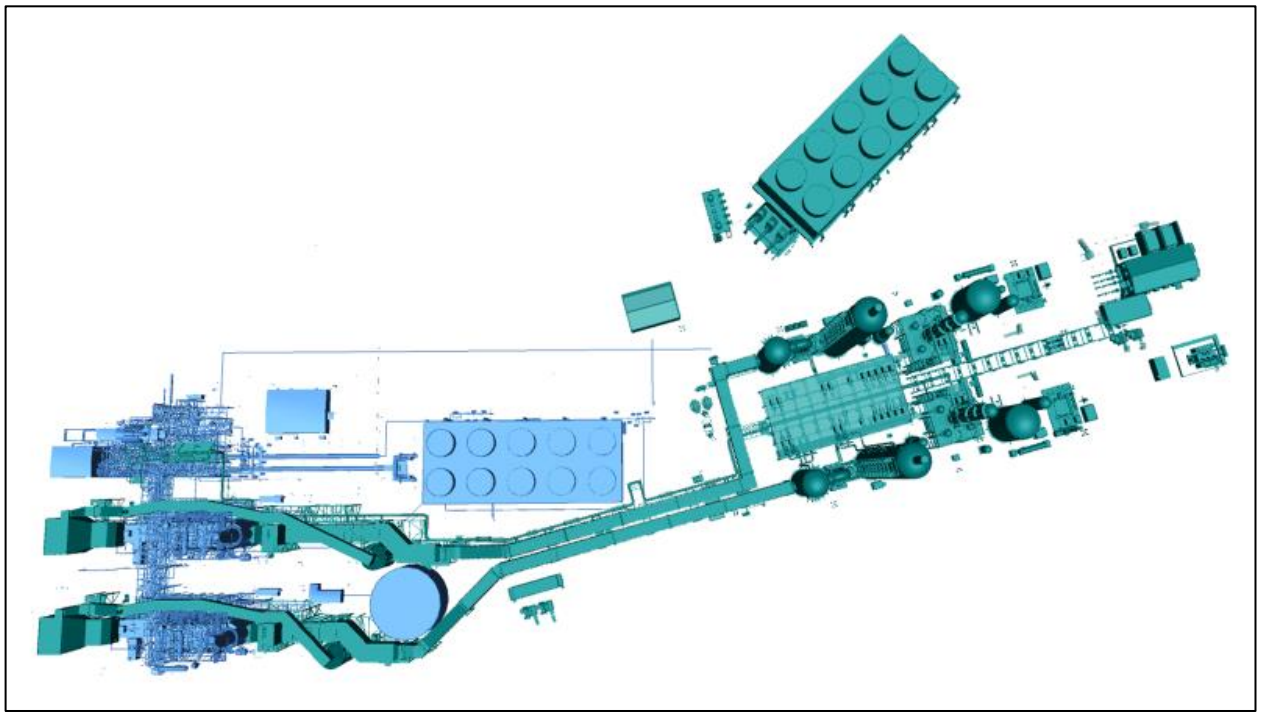

Figure 23: 3D Model of Integrated NGCC+ CCS – Plan View

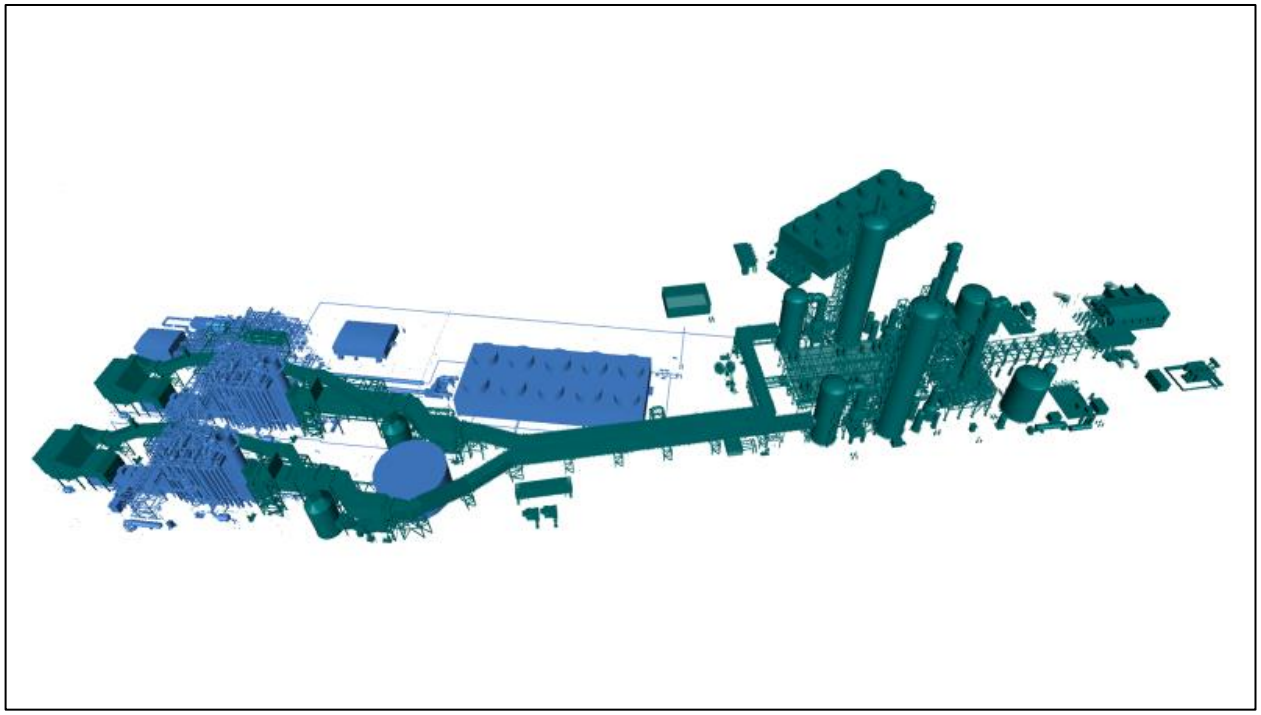

Figure 24: 3D Model of Integrated NGCC+ CCS – Bird's-Eye View (1 of 2)

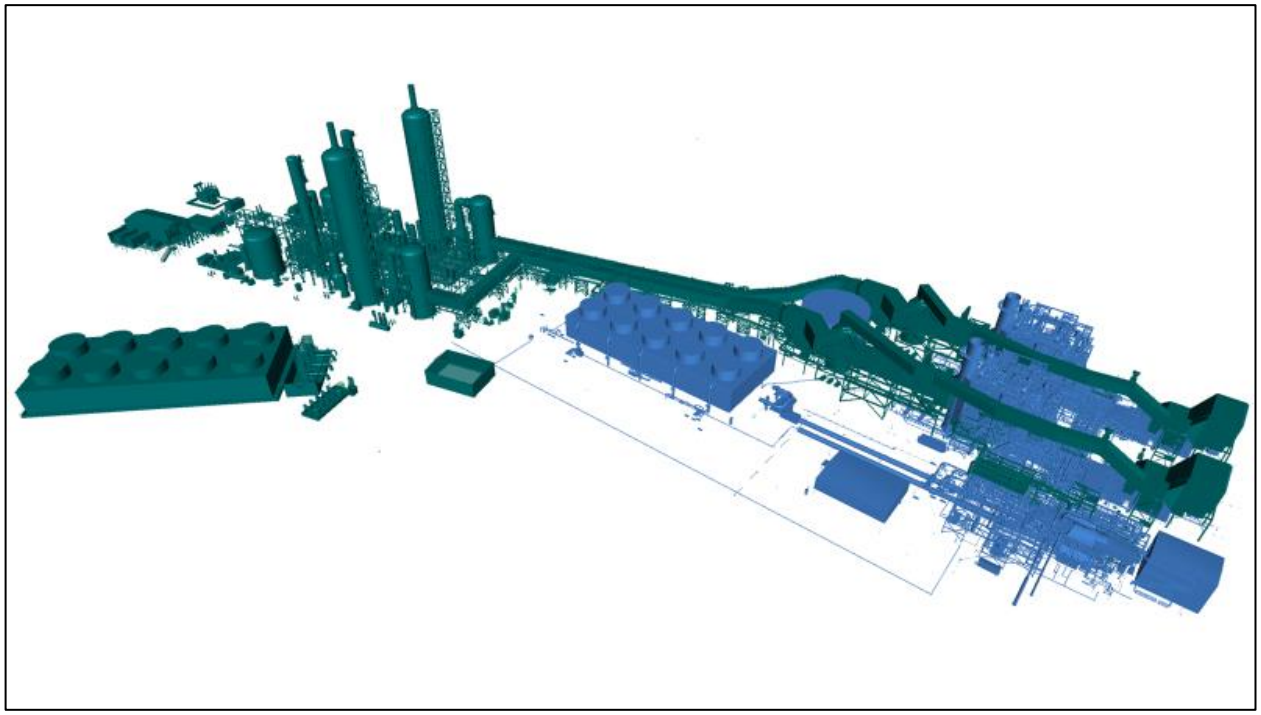

Figure 25: 3D Model of Integrated NGCC+ CCS – Bird's-Eye View (2 of 2)

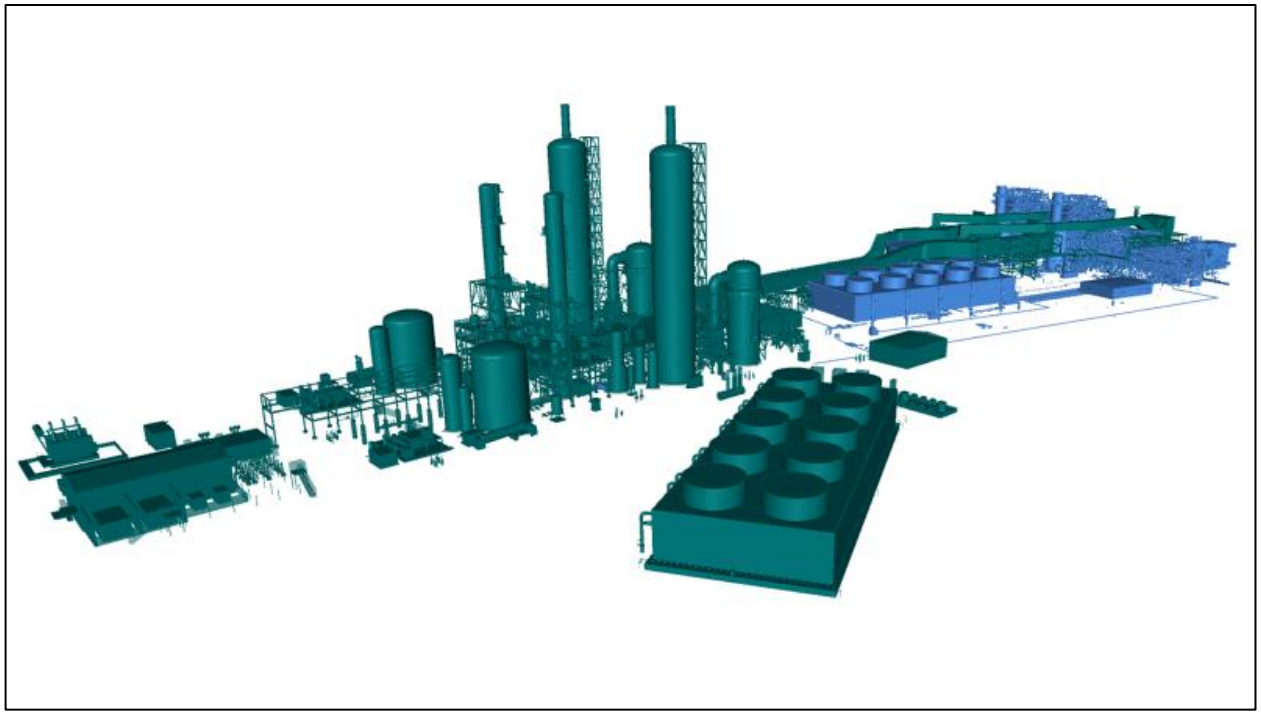

Figure 26: 3D Model of Integrated NGCC+CCS – Carbon Capture Island

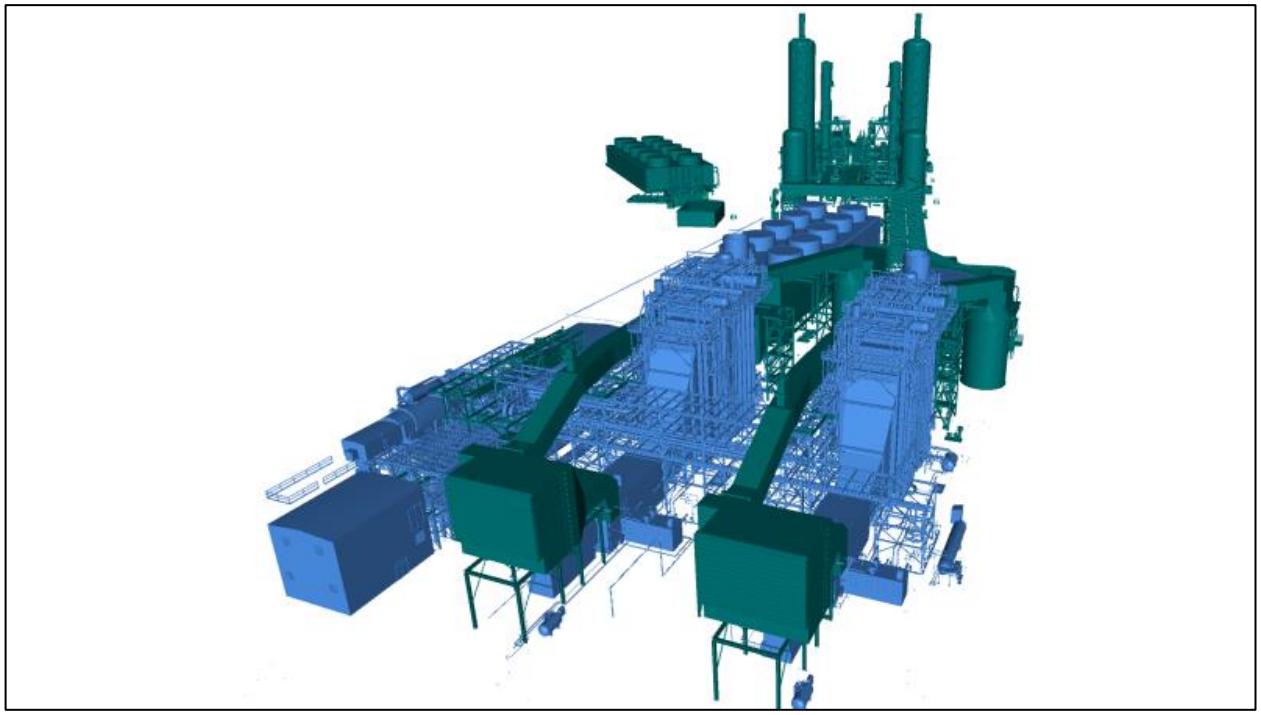

Figure 27: 3D Model of Integrated NGCC+CCS – View from GT Inlet

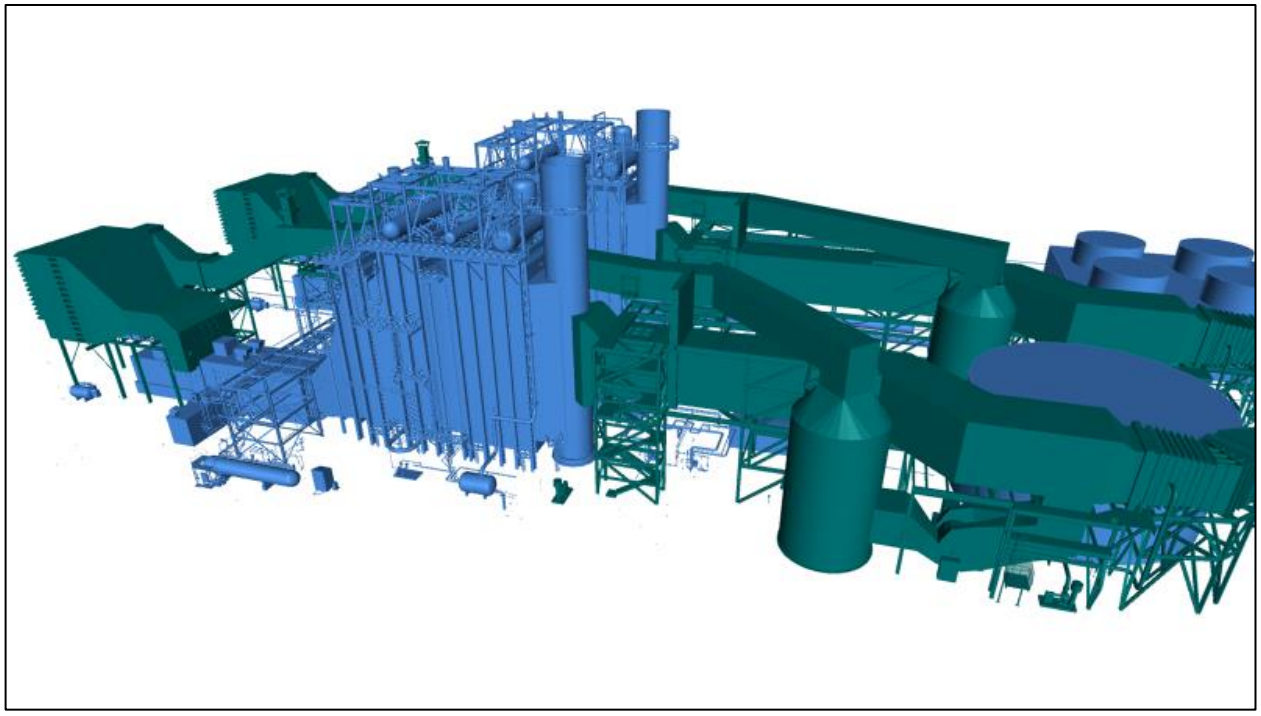

Figure 28: 3D Model of Integrated NGCC+CCS – Power Island (1 of 2)

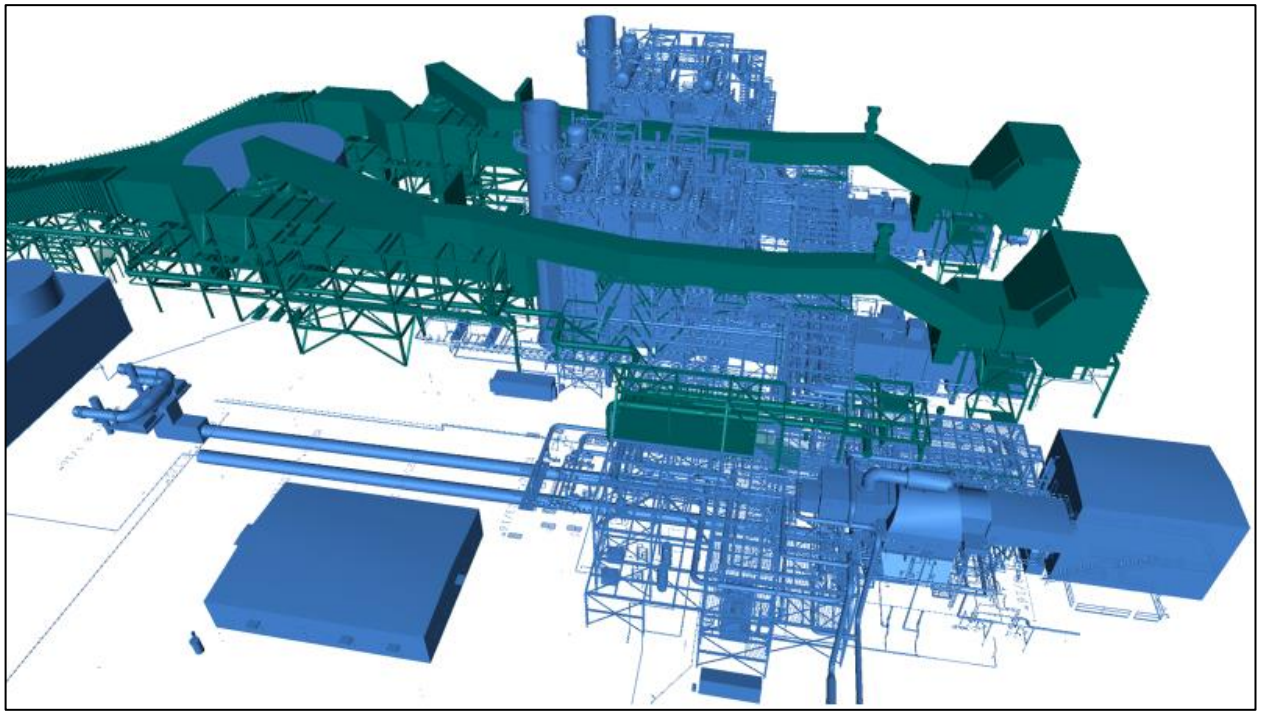

Figure 29: 3D Model of Integrated NGCC+CCS – Power Island (2 of 2)

2.6 Task 2.6 - FEED Study Cost Assessment

The costs presented here are a compilation of final costs.

All costs will also have individual uncertainties (plus and minus) listed and a combined bottom-line total cost and total uncertainty.

All costs presented in this summary report are noted as 2018 or 2023 US Dollars.

2.6.1 Basis of Costs

This assessment and report use the DOE/NETL definitions available various reports. See Figures 30 through 32.

The Bare Erected Cost (BEC) comprises the cost of process equipment, on-site facilities and infrastructure that support the plant (e.g., shops, offices, labs, road), and the direct and indirect labor required for its construction and/or installation. The cost of EPC services and contingencies are not included in BEC.

The Engineering, Procurement and Construction Cost (EPCC) comprises the BEC plus the cost of services provided by the EPC contractor. EPC services include: detailed design, contractor permitting (i.e., those permits that individual contractors must obtain to perform their scopes of work, as opposed to project permitting, which is not included here), and project/construction management costs.

The Total Plant Cost (TPC) comprises the EPCC plus project and process contingencies.

The Total Overnight Cost (TOC) comprises the TPC plus all other overnight costs, including owner's costs. TOC does not include escalation during construction or interest during construction.

The Total As-Spent Cost (TASC) is the sum of all capital expenditures as they are incurred during the capital expenditure period including their escalation. TASC also includes interest during construction, comprising interest on debt and a return on equity.

Figure 30: NETL Definition of CapEx from page 45 of 'Cost and Performance Baseline for Fossil Energy Plants Volume 1: Bituminous Coal and Natural Cas to Electricity' report dated September 24, 2019

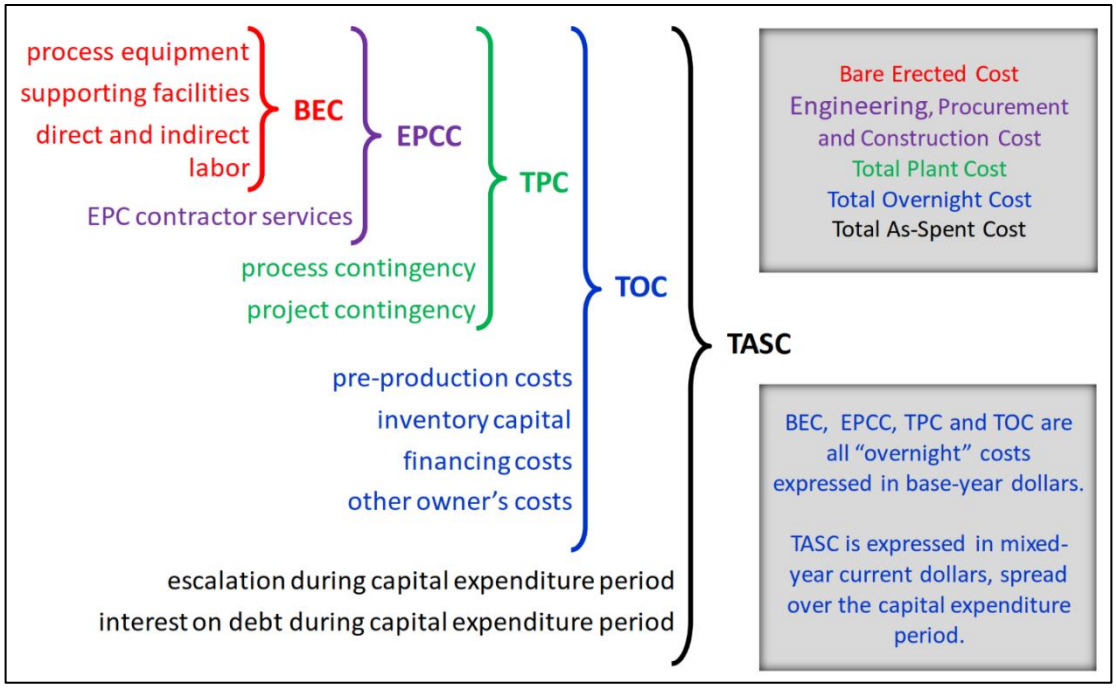

Figure 31: NETL Capital Cost Levels and Elements from page 10 of 'Cost Estimation Methodology for NETL Assessments of Power Plant Performance' report dated February 2021

CapEx Total Plant Cost (TPC) includes:	**OpEx includes:**

• Process Equipment / Supporting Facilities / Direct & Indirect Labor for:
  ○ Feedwater & Misc. BOP Systems
  ○ CO2 Removal and Compression (inc. modifications to HRSG stacks)
  ○ Cooling System (water)
  ○ Accessory Electric Plant
  ○ Instrumentation & Controls
  ○ Improvements to Site
  ○ Buildings & Structures
  ○ IF APPLICABLE: EGR, aux boiler, non-condensing steam turbine, steam turbine modifications inc. butterfly valve
• EPC Contractor Services
• Process Contingencies
• Project Contingencies
	• Total Fixed Operating Costs
	• Maintenance Material Cost (100% Capacity Factor)
	• Consumables (100% Capacity Factor)

Figure 32: NETL Summary of CapEx and OpEx Components from 'Cost and Performance Baseline for Fossil Energy Plants Volume 1: Bituminous Coal and Natural Cas to Electricity' report dated September 24, 2019

2.6.2 Capital Expense (CapEx) Cost Breakdown Structure

The CapEx presented here is broken down by:

- **Cost of Existing NGCC** (see Table 24)

  This cost is used to evaluate the current LCOE plus the break-even CO_2 sale price and break-even CO_2 emission penalty. This CapEx estimate is not the actual cost to build the plant in 2000, which is not publicly available, but is representative of what a plant of this size and configuration would cost to build today.

- **Cost of Base Modifications** (see column 1 in Tables 25 and 26)

  This cost includes the cost to retrofit CCS to the existing NGCC. It does not include the actual cost of the CCS, or any of the optional GT changes down-selected as a part of the CCS:
  - Steam Turbine Modifications (to allow large CCS steam extraction)
    - New HP steam turbine steam path
    - New IP steam turbine steam path
    - New LP steam turbine steam path and crossover with butterfly valve
  - Upgraded BOP controls to accommodate additional I/O from CCS
  - Upgraded GT controls to support feed-forward control of CCS

- **Cost of EGR** (see column 2 in Tables 25 and 26)

  This includes the GT modifications that EGR requires:

  - EGR System
    - New .05 inlet filter house
    - Inlet EGR mixer
    - EGR inlet / exit dampers
    - EGR blower
    - EGR direct contact cooler
    - EGR CW pumps and plate / frame heat exchangers
    - EGR interconnecting duct, expansion joints, and purge stack
    - EGR exhaust gas monitoring system and flowmeter
  - Required HRSG Modifications
    - Stack damper and sealing air system
    - Breach connection to HRSG stack
    - CCS tandem louver and guillotine dampers
  - Required GT Modifications
    - DLN 2.6+ combustion system (improved operability with high inlet CO_2)
    - GECC1 compressor coating (improved corrosion resistance)
    - Change from GTD450 to DTD494 material (improved corrosion resistance)

- **Cost of GT Modifications** (see column 3 in Tables 25 and 26)

  These are items that are unrelated to EGR or even CCS but are primarily selected to maintain NGCC+CCS net plant output capability and plant robustness/reliability:

- 7F.05 compressor (i.e. -200) with over board bleed (OBB)
- GT hot gas path (HGP) conversion to Tech 1.0
- Replace GT exhaust frame with robust design
- Replace GT exhaust diffuser duct (MLI A042) with latest design
- Upgrade to 7F.05 GT compartment roof and ventilation system
- Upgrade GT piping insulation (MLI's 0909 and 0924)
- Retain GT steam injection for power augmentation (SIPA)

- **CCS ISBL Capture Equipment** (see column 4 in Tables 25 and 26)

  These are items to cool and capture the CO_2 from the NGCC exhaust stream and separate into a concentrated CO_2 stream:

  - CCS direct contact cooler
  - CCS flue gas blower
  - CCS DCC CW pump and cooler heat exchanger
  - CCS absorber column
  - CCS absorber pumps and cooler heat exchangers
  - CCS rich / lean solution heat exchanger
  - CCS stripper column
  - CCS stripper reboiler
  - CCS stripper pumps and cooler heat exchangers
  - CCS solution storage and make-up tanks
  - CCS slop vessel and pumps
  - CCS interconnecting piping and ductwork
  - CCS containment berm

- **Cost of CCS ISBL Compression Equipment** (see column 5 in Tables 25 and 26)

  These are items to compress and dry the CO_2 to prepare it for transport via pipeline to the remote sequestration well:

  - CCS LP compressors
  - CCS CO_2 intercooler heat exchangers
  - CCS condensate knock-out tanks
  - CCS CO_2 chiller unit
  - CCS HP compressors
  - CCS interconnecting piping

- **Cost of CCS OSBL Cooling Equipment** (see column 6 in Tables 25 and 26)

  These are items to cool the EGR and CCS processes:

  - CCS cooling tower
  - CCS circulating water pumps and piping

- **Cost of CCS OSBL Other Equipment** (see column 7 in Tables 25 and 26)

  These are all other items needed outside of the Core CCS ISBL to interface mechanically and electrically between the existing NGCC and the CCS:

  - CCS flue gas ducting and steam / condensate piping (from CCS to NGCC)
  - CCS auxiliary electric switchyard, transformer, and motor control center
  - CCS control and administration building
  - CCS solvent and NaOH truck unloading stations
  - CCS stormwater management
  - CCS fire protection system
  - CCS compressed air system
  - CCS potable water system
  - CCS make-up water system
  - CCS waste water system

- **Cost of CCS Initial Fill** (see column 8 in Tables 25 and 26)

  - Sodium hydroxide, OASE® blue solvent, and carbon filters

2.6.3 CapEx Estimating Process

Costs provided in Section 2.6.4 are based on the quantities developed throughout the FEED study by Kiewit, GEGP, and Linde. Quantities include anything requiring installation or startup for the project as part of Kiewit Scope such as equipment, modules, steel, piping, foundations, instruments, and/or cables. Kiewit solicited vendor bids for select equipment. The remaining equipment costs were based on Kiewit's historical information. A summary of equipment and subcontract cost basis is shown in Table 22. The division of responsibility for cost development is shown in Table 23.

Kiewit applied unit rates to each quantity to calculate the required man-hours for that activity. Unit rates for each type of quantity bucket were developed using Kiewit's historically achieved rates. Similar scope activities from Kiewit projects with considerations of geographical area and labor type are all considered when developing the project specific labor productivity rates for each quantity bucket.

A wage rate is then applied to calculate the labor costs. Labor wages used in this estimate are union rates. The wages were checked and compared with prevailing wages to confirm they meet the current prevailing wages in the area for the applicable levels. These labor wages were then used along with the quantities and unit rates to determine the total installation and construction costs.

Bulk materials (structural steel, piping, cement, cable, etc.) are a composite of historical and "market basket" prices from vendor quotes that are periodically updated for estimate purposes.

Startup costs are estimated by factoring from historical projects.

Indirect costs are determined from reviewing historical project information (by region, total craft manhours, total project duration, permanent material and equipment costs, and escalation during project duration). All historical costs used were escalated to current dollars.

Description	Cost Basis
Steam turbine modifications	Recent similar-to detailed quotes
Gas turbine modifications	Current pricing levels from GE database
HRSG modifications related to GT upgrade	Recent similar-to as built costs
Structured packing installation subcontract (EGR and CCS DCC, CCS absorber, CCS stripper column)	Historical pricing
Flue gas dampers	Budgetary vendor quote
Ductwork	Budgetary vendor quote
Fire protection subcontract	Historical pricing
Cooling tower subcontract	Budgetary vendor quote
Circulating water pumps	Budgetary vendor quote
General service pumps	Budgetary vendor quote
Cooling tower chemical feed equipment / tanks	Historical pricing
Instrument air compressor and dryer	Historical pricing
Instrument air receivers	Historical pricing
Potable water tempering skid	Historical pricing
LP steam non-return valves and gate valves	Historical pricing
Oil water separator	Historical pricing
Main power transformers	Budgetary vendor quote (email)
SUS transformers	Historical pricing
Electrical enclosures	Budgetary vendor quote (email)
UPS system	Historical pricing
Substation (breakers, enclosure, outdoor eq.)	Historical pricing
DCS	Historical pricing
Instrumentation	Historical pricing
Cable bus	Historical pricing
Construction subcontracts (pilings etc)	Historical pricing

Table 22: Cost Basis for Engineered Equipment and Subcontracts

	Design	Material Take-Offs	Material Supply Costs	Installation Costs
NGCC				
Base NGCC Modifications	GEGP	GEGP	GEGP	GEGP
Gas Turbine Modifications	GEGP	GEGP	GEGP	GEGP
EGR				
Duct	GEGP	GEGP	GEGP	Kiewit
Duct Support Steel	Kiewit	Kiewit	Kiewit	Kiewit
Mechanical Equipment	GEGP	GEGP	GEGP	Kiewit
Piping, Valves, Specialties, Supports	GEGP	GEGP	Kiewit	Kiewit
Gas Turbine Inlet Filter House Mods	GEGP	GEGP	GEGP	GEGP
Wire and Cable	Kiewit	Kiewit	Kiewit	Kiewit
Foundations	Kiewit	Kiewit	Kiewit	Kiewit
Inside Battery Limits (ISBL)				
Duct	Linde	Kiewit	Kiewit	Kiewit
Support Steel	Linde	Linde	Kiewit	Kiewit
Mechanical Equipment	Linde	Linde	Linde	Kiewit
Piping, Valves, Specialties, Supports	Linde	Linde	Linde	Kiewit
Electrical Equipment, PDC, Transformers	Linde	Linde	Linde	Kiewit
Wire and Cable	Linde	Linde	Linde	Kiewit
Foundations	Kiewit	Kiewit	Kiewit	Kiewit
Outside Battery Limits (OSBL)				
All Equipment and Materials	Kiewit	Kiewit	Kiewit	Kiewit
Administration Building	Kiewit	Kiewit	Kiewit	Kiewit
PDCs and Substation, Main Power Transformer	Kiewit	Kiewit	Kiewit	Kiewit
Mechanical Equipment	Kiewit	Kiewit	Kiewit	Kiewit
Piping, Valves, Specialties, Supports	Kiewit	Kiewit	Kiewit	Kiewit
Duct between HRSG outlet / EGR inlet (by GE) and ISBL inlet (by Linde)	Kiewit	Kiewit	Kiewit	Kiewit

Table 23: Division of Responsibility for Cost Development

2.6.4 CapEx (TPC) Values and Uncertainties

The CapEx values presented below include parts, freight, engineering and drafting, performance testing, project management, installation (including direct and indirect labor), and contingency (process and project). All management fees and margins to contractors are included in the cost roll-up. As described in section 2.6.1, these represent the Total Project Cost (TPC).

CapEx for Existing Barry Unit 6 Combined Cycle

The capital cost of the base NGCC has been estimated for use in the calculation of the LCOE in the TEA. The following are the capital cost estimates for the current NGCC (prior to modifications for or the addition of CCS). This is not the actual cost from 2001 for the construction of the Barry Unit 6 but is based on the projected cost of building a similar sized plant in December 2018 and November 2023.

	Costs in Dec 2018 $MM USD	Costs in Nov 2023 $MM USD
Total Project Cost	$432.0MM ($783/kW TPC)	$574.5MM ($1041/kW TPC)
Total Overnight Cost	$525.0MM ($951/kW TOC)	$698.3MM ($1265/kW TOC)
Total As-Spent Cost	$572.3MM ($1037/kW TASC)	$761.1MM ($1379/kW TASC)

Table 24: Estimated CapEx for Existing 2x1 7F Barry Unit 6 Combined Cycle

CapEx for Carbon Capture System

Note the following while reviewing the three tables below:

- In Tables 25 and 26 below, cost in each column includes the items listed in Section 2.6.2. Below is a summary of the items:
  1) Base Modifications required to existing Steam Turbine and BOP required to implement CCS of any kind
  2) Exhaust Gas Recirculation (EGR) System to increase CCS inlet CO2 concentration and decrease flue gas total flow. This includes the required HRSG and GT modifications to allow EGR (DLN 2.6+ Combustor, Compressor Material Upgrade and coatings, and GT controls system).
  3) GT Modification to retain net NGCC/CCS net output and retain operational reliability.
  4) CCS Core (ISBL) CO_2 Capture System (includes DCC, Absorber, Stripper and Reboiler); See Appendix A page 53 for a detailed cost breakdown
  5) CCS Core (ISBL) CO_2 Compression System (includes CO_2 Compressors, Dryers, and Intercoolers)
  6) CCS BOP (OSBL) Cooling Water System (includes CCS Cooling Tower, Cooling Water Circulation Pumps and Heat Exchangers)
  7) CCS BOP (OSBL) Electrical, Civil, Mechanical Interfaces to NGCC
  8) Initial fill of CCS inventory (Solvent, Sodium Hydroxide and Activated Carbon)
- Values in Table 25 are provided in 2018 $MM USD; Values in Table 26 are provided in 2023 $MM USD
- Design of the capture system is required to support a capital cost estimate consistent with AACE (Association of the Advancement of Cost Engineering) Class 3 with an expected accuracy range of -10% to -20% on the low side and +10% to +30% on the high side. The actual cost estimate uncertainty was monitored from each of the major areas and combined into an overall uncertainty.
  - In Table 25, resulting composite Capital Cost Uncertainty is +28.5% / -17.7% and is within the targeted +30/-20% range.
  - In Table 26, resulting composite Capital Cost Uncertainty is +28.7% / -18.0% and is within the targeted +30/-20% range.
- Initial fill values are based on:
  - 4022 tonnes @ 40% wt (1608.8 tonnes @ 100%) OASE® blue solvent
  - $14.30/kg solvent cost in 2018$(US), $18.30/kg solvent cost in 2023$(US)
  - $400k (2018$ US)/$500k (2023$ US) for all other initial fills (324k gal caustic soda, 3402 tonnes pot ash (K_2CO_3), 176 kg anti-foam agent, 182 tonnes activated carbon)
- For additional information, see Appendices A and TT.

Costs in Dec 2018 $MM USD (+30%/-20%)									
	(1)	(2)	(3)	(4)	(5)	(6)	(7)	(8)	
	Base Mods	EGR	GT Mods	CCS ISBL Capt	CCS ISBL Comp	CCS OSBL CW	CCS OSBL Other	CCS Initial Fill	Total
Equipment	18.01	42.51	38.33	119.44	43.41	18.50	29.33	23.41	332.9
Piping / Ducting	---	7.27	---	90.78	26.26	5.04	19.82	---	149.2
Foundations	---	2.69	1.18	11.73	3.81	3.01	11.81	---	34.2
Civil / Structural	---	8.36	2.95	52.02	10.29	5.81	28.36	---	107.8
Labor and Misc.	9.70	5.50	16.51	73.81	11.88	6.23	23.37	---	147.0
Sub-Total TPC	**27.71**	**66.33**	**58.97**	**347.79**	**95.65**	**38.59**	**112.36**	**23.41**	**771.1**
Contingency	1.09	7.31	1.81	69.42	19.10	7.70	27.15	---	133.6
Total Project Cost	**28.79**	**73.64**	**60.78**	**417.21**	**114.75**	**46.28**	**139.84**	**23.41**	**904.7**
Total Overnight Cost	---	---	---	---	---	---	---	---	1,099.7
Total As-Spent Cost	---	---	---	---	---	---	---	---	**1,198.6**

Table 25: CapEx for Carbon Capture System in December 2018 USD

Costs in Nov 2023 $MM USD (+30%/-20%)									
	(1)	(2)	(3)	(4)	(5)	(6)	(7)	(8)	
	Base Mods	EGR	GT Mods	CCS ISBL Capt	CCS ISBL Comp	CCS OSBL CW	CCS OSBL Other	CCS Initial Fill	Total
Equipment	23.03	41.58	47.34	169.19	60.90	27.18	46.81	29.94	446.0
Piping / Ducting	---	10.69	---	133.39	38.58	7.40	29.12	---	219.2
Foundations	---	3.95	1.46	17.24	5.60	4.43	17.35	---	50.0
Civil / Structural	---	12.28	3.64	76.44	15.11	8.54	41.67	---	157.7
Labor and Misc.	12.40	8.09	20.39	108.45	17.46	9.16	34.33	---	210.3
Sub-Total TPC	**35.43**	**76.59**	**72.83**	**504.70**	**137.65**	**56.70**	**169.28**	**29.94**	**1,083.1**
Contingency	1.39	9.53	2.23	100.74	27.49	11.31	39.75	---	192.4
Total Project Cost	**36.82**	**106.03**	**75.06**	**605.44**	**165.14**	**68.01**	**209.03**	**29.94**	**1,295.5**
Total Overnight Cost	---	---	---	---	---	---	---	---	1,574.6
Total As-Spent Cost	---	---	---	---	---	---	---	---	**1,716.4**

Table 26: CapEx for Carbon Capture System in November 2023 USD

2.6.5 Operating Expense (OpEx) Cost

Operating expense is the sum of Fixed Operating Cost (FOC) which doesn't change regardless of operating hours and Variable Operating Cost (VOC) which varies with the number of operating hours. The FOC and VOC are shown for the current NGCC, for the proposed CCS, and for the combined NGCC+CCS.
Note the following while reviewing Table 27 below:

- NGCC FOC and VOC are representative and are not from the actual plant
- FOC does not include property taxes and insurance
- VOC assumes 85% Capacity Factor (7,446 hours/year)

- Variable cost for the CCS solvent is based on guaranteed levels from BASF of 490 tonnes/year which translates to 0.3 kg of solvent (100% concentration) usage per 1 tonne of CO_2 captured; See Linde document &AE 1000 P-CU 1001 (EN) "Utility and Chemical Consumption" in Section 2.3.15
- Values are provided in both 2018 and 2023 $MM USD; Format is 2018 [2023]

	NGCC	CCS	NGCC+CCS
FOC			
Annual Operating Labor	2.22 [2.44]	0.46 [0.51]	2.68 [2.95]
Maintenance Labor	3.28 [3.61]	2.30 [2.53]	5.58 [6.14]
Administrative and Support Labor	1.72 [1.89]	0.22 [0.24]	1.94 [2.13]
Total FOC	**7.22 [7.94]**	**2.98 [3.28]**	**10.20 [11.22]**
VOC			
Maintenance Material			
Total Maintenance Material	4.90 [5.39]	8.14 [8.95]	13.04 [14.34]
Consumables			
Water	0.93 [1.02]	0.79 [0.87]	1.72 [1.89]
Makeup and Wastewater Treatment Chemicals	0.78 [0.86]	0.68 [0.75]	1.46 [1.61]
Ammonia	0.28 [0.31]	0.005 [0.006]	0.285 [0.316]
SCR Catalyst	0.11 [0.12]	---	0.11 [0.12]
CO_2 Capture System Chemicals	---	7.00 [8.97]	7.00 [8.97]
Tri-ethylene Glycol	---	0.83 [0.91]	0.83 [0.91]
Total Consumables	2.10 [2.31]	11.28 [12.41]	13.38 [14.72]
Waste Disposal			
SCR Catalyst	0.002 [0.002]	---	0.002 [0.002]
Tri-ethylene Glycol	---	0.04 [0.044]	0.04 [0.044]
Amine Purification Unit Waste	---	0.07 [0.08]	0.07 [0.08]
Thermal Reclaimer Unit Waste	---	0.006 [0.007]	0.006 [0.007]
Total Waste Disposal	0.002 [0.002]	0.12 [0.13]	0.122 [0.132]
Total VOC	**7.00 [7.70]**	**19.54 [21.49]**	**26.54 [29.19]**
FOC + VOC			
Total O&M Costs	**14.22 [15.64]**	**22.52 [24.77]**	**36.74 [40.41]**

Table 27: Operations and Maintenance Costs

3 Results for Task 3 – Commercial Assessment

3.1 Business Case Analysis (BCA)

The Business Case Analysis dated 2/5/2024 is available in Appendix UU. This assessment was performed by GEGP and contains information such as market size for NGCC+CCS, proforma for NGCC+CCS, first year cash flow, technology overview, market analysis, future deployment projection, and potential benefits of the technology. A summary of this analysis is provided below.

The BCA demonstrates an understanding of the current and projected landscapes of both the natural gas combined cycle markets and the proposed site at Barry Unit 6 including the potential utilization of tax credits including their projected revenue and duration.

The Barry Unit 6 site consists of the following major components and has ample available land nearby for adding carbon capture: two GE 7FA gas turbines, two Vogt horizontal gas flow triple pressure reheat HRSGs with duct burners, and one GE D11 steam turbine. Makeup water is readily available at the site from the adjacent Mobile River. Proven advanced amine solvent (BASF OASE® blue) with a capture rate of 95% will be provided by Linde CCS technology. To reduce the CCS cost, GEGP will provide an exhaust gas recirculation system which will elevate the carbon dioxide concentration to the CCS allowing the system to remove a higher percentage of CO_2 (6.7% vol with EGR vs 4.0% vol without EGR).

The proposed solution should be applicable to any combined cycle plant including F class and H class GTs including both GEGP GTs as well as other manufacturers' GTs. Regarding the market analysis and future deployment projections, a survey of GEGP's installed GT fleet, based on available space for CO_2 capture, indicated that >300 GTs in the US can be opportunities for the proposed retrofit solution.

Indicative CapEx, cost to add and integrate CCS into the existing facility, is provided as total plant cost (TPC). Value for OpEx represents the additional cost per year once CCS is added to the site. Proforma results of $1,322MM total CapEx, $23MM/yr total OpEx, $18MM/yr CO_2 transportations and storage, $22MM/yr make-whole payment to site for lost power plus added fuel usage, and $158MM/yr 45Q tax credit result in net operating income of $71MM/yr, and negative 2% after-tax rate of return (unlevered), or positive 2% with an assumed one-time $270MM DOE CapEx cost share.

Based on these proforma results, the CCS addition at Barry Unit 6 could be feasible. However, financial feasibility requires the following to be true:

1) Alabama Public Service Commission (APSC) must conclude that decarbonization is in the best interest of the rate-payers of Alabama. This will likely follow from a new set of greenhouse gas emissions rules from the US EPA. Without this APSC directive, the proforma rates of return would be ~1% lower, because in addition to the CCS CapEx, a rate payer rebate would be required. The make-whole payment listed in the proforma is for the increased fuel cost driven by the CCS.
2) Some level of cost share (such as the $270MM listed in the proforma) must be included to reduce the CapEx and increase the after-tax internal rate of return.
3) Even with items 1) and 2) above, this project will only be financially feasible for "green" energy investors, that place inherent value in decarbonization.

3.2 Techno-Economic Analysis (TEA) and Lifecycle Analysis (LCA)

This section of the report contains summaries of the TEA and LCA for the FEED study and includes the following:

- 3.2.1 – Summary of TEA including NGCC+CCS operating philosophy and TEA impact, NGCC+CCS performance summary, air emissions, carbon balance, CapEx and OpEx, cost of capture and CO_2 avoided cost, maximum carbon capture efficiency, and sensitivity studies
- 3.2.2 – Summary of LCA

3.2.1 Summary of TEA

The techno-economic analysis dated 3/26/2024 is available in Appendix A. This analysis was performed by GEGP.

3.2.1.1 NGCC+CCS Operating Philosophy and TEA Impact

The application of CCS to the NGCC changes performance in two fundamental ways: first, it reduces the steam turbine output by over 40MW due to the steam extraction needed to operate the CCS reboiler that would otherwise contribute to the ST generator output and second, it adds a significant amount of new auxiliary loads of over 30MW including the new CO_2 compressors and the CCS flue gas fan. The CCS is being integrated into Barry Unit 6 in such a way that if the CCS is shut down, the NGCC will regain most of the 70+MW of net output. To compensate for this large capacity reduction, the NGCC+CCS integration includes a recommendation of a GT upgrade of .05 Compressor with DLN 2.6+ Flex and AGP Tech HGP that will recover, on average, all of the lost plant capacity (existing average NGCC baseload capacity is 551MW, new average upgraded NGCC+CCS baseload capacity is 553 MW). As the new NGCC+CCS operates with ~95% of CO_2 captured, the plant is anticipated to operate at high loads for >80% of the time. However, the load demand is still expected to vary, and the NGCC+CCS plant will need to react to that varying load demand.

The new normal operating profile is expected to be:

- **At or Below NGCC Baseload Demand**
    - Operate NGCC with CCS on
    - EGR on if > 70% GT load, optional if < 70% load
    - Evaporative Cooler (EC) on for ambient temperatures above 50°F
    - HRSG duct burner and GT Steam Injection for Power Augmentation (SIPA) off (permissive off)
    - Maximum use of 45Q tax credit for captured CO_2
    - No GT maintenance factor
- **Above NGCC Baseload Demand (Up to ~76MW Above Baseload)**
    - Turn CCS to hot standby to gain > 70MW combined cycle net
    - Turn EGR off
    - EC on for ambient temperatures above 50°F
    - HRSG Duct Burner and SIPA off (permissive off)
    - Loss of 45Q tax credit for captured CO_2
    - No GT maintenance factor
- **More Above NGCC Baseload Demand (Up to ~100MW Above Baseload)**
    - Extend GT into peak airflow
    - Maintain CCS in hot standby
    - Maintain EGR off
    - EC on for ambient temperatures above 50°F
    - HRSG duct burner and SIPA off (permissive off)
    - Loss of 45Q tax credit for captured CO_2
    - No GT maintenance factor
    - Modest combined cycle efficiency loss
- **Further Above NGCC Baseload Demand (Up to ~125MW Above Baseload)**
    - Extend GT into peak load and then into extended peak mode

- Maintain CCS in hot standby
- Maintain EGR off
- EC on for ambient temperatures above 50°F
- HRSG duct burner and SIPA off (permissive off)
- Loss of 45Q tax credit for captured CO_2
- Modest GT maintenance factor

- **Much Further Above NGCC Baseload demand (Up to ~150MW Above Baseload)**

  - Maintain GT in extended peak mode
  - Maintain CCS in hot standby
  - Maintain EGR off
  - EC on for ambient temperatures above 50°F
  - Engage HRSG duct burner
  - Add steam to GT SIPA
  - Loss of 45Q tax credit for captured CO_2
  - High GT maintenance factor

The result of the new operating profile is that while the maximum potential load increase is substantially higher, the actual operation of the HRSG duct burner will be fewer hours per year, as well as fewer hours per year on SIPA, with lower corresponding impacts to GT maintenance factors. Also, the result of the profile is that the operation of the CCS and EGR are mutually exclusive to the operation of the HRSG duct burner and GT SIPA.

There are several pre-requisites that result from the new configuration:

- Stable ST operation with GT > MECL required to operate EGR
- EGR operating is required for GT > 70% load if CCS is on
- EGR off is required to operate HRSG duct burner

3.2.1.2 NGCC+CCS Performance Summary, Air Emissions, and Carbon Balance

The TEA was completed using performance from the final design case available in the last column of Table 12. The three tables below provide additional details on the final design case. A water balance is available in Appendix A.

Note the following while reviewing Tables 29 and 30:

A – Calculations are based on an 85% capacity factor
B – Emissions are based on gross power
C – Emissions are based on net power

	Units	Value
Gas Turbine Output (Each of 2)	kW	207,545
Steam Turbine Output	kW	189,728
Total Gross Power	kW	604,818
NGCC Auxiliary Loads	kW	8,719
CCS Auxiliary Loads	kW	18,356
CO2 Compression	kW	20,824
Total NGCC/CCS Auxiliary Loads	kW	47,899
Net NGCC/CCS Power	MW	556.919
HHV Net NGCC+CCS Efficiency	%	44.54%
HHV Net NGCC+CCS Heat Rate	Btu/kW-hr	7,660.3
LHV Net NGCC+CCS Efficiency	%	49.35%
LHV Net NGCC+CCS Heat Rate	Btu/kW-hr	6,913.6
HHV Thermal Input	MM Btu/hr	4,226.152
LHV Thermal Input	MM Btu/hr	3,850.318
CO2 Captured	lb/hr	482,674
CO2 Emitted	lb/hr	25,404

Table 28: Performance Summary for Final Design Case

	ppmvd	kg/GJ (lb/MM Btu)	tonne/yr (ton/yr)[A]	kg/MWh (lb/MWh)[B]
NO_x (includes SCR impact)	2	0.00091 (0.0021)	30.0 (33.1)	0.0072 (0.016)
Particulate		0.00083 (0.0019)	27.7 (30.5)	0.0067 (0.0147)
CO	9	0.00195 (0.00454)	64.8 (71.5)	0.0075 (0.0165)
CO_2		2.58 (6.01)	85,801 (94,579)	19.1 (42.0)
CO_2[C]				20.7 (45.6)

Table 29: Air Emissions Summary for Final Design Case

Carbon In [A]		Carbon Out [A]	
	kg/hr (lb/hr)		kg/hr (lb/hr)
Pipeline Gas	229,044 (504,956)	Stack Gas	11,523 (25,404)
Air (CO_2)	1,416 (3,122)	CO2 Product	218,938 (482,674)
Total	**230,461 (508,078)**	**Total**	**230,461 (508,078)**

Table 30: Carbon Balance for Final Design Case

3.2.1.3 CapEx and OpEx

Detailed information on CapEx and OpEx is available in Section 2.6.

3.2.1.4 Cost of Capture and CO_2 Avoided Cost

As part of the TEA, GEGP compared performance and cost for Barry Unit 6 to values for Case B31B for NGCC with CO_2 Capture in NETL publication 'Cost and Performance Baseline for Fossil Energy Plants, Volume 1: Bituminous Coal and Natural Gas to Electricity' Revision 4 dated 9/24/2019. A summary of this comparison is provided below.

Note the following while reviewing Table 31:

- Costs are provided in 2018 $MM USD and 2023 $MM USD
- Includes lower variable operating cost due to reduced solvent degradation when EGR is operating
- Assumes treatment is not required for discharge water from CCS containment or process condensate from Direct Contact Coolers (routed to cooling tower basin)
- 85% Capacity Factor for NGCC and CCS (7446 hrs/yr)
- CCS operates 100% of the time NGCC is operated (at or below NGCC baseload)
- 95% CO_2 capture over entire operating life of facility
- 45Q tax credit is not included in the TEA
- $4/MM Btu (HHV) Pipeline fuel cost
- CO_2 transportation and sequestration costs is $10/tonne CO_2
- Fixed charge rate of 7.07% is applied to convert one-time charges (i.e. CapEx) to annual expenses
- Assumes no leakage into or out of HRSG stack or other flue gas ducting

		NETL 2018 USD	Proposal 2018 USD		Final 2018 USD	Final 2023 USD
		Case B31B 90% Capture	GEGP Case 2 95% Capture	GEGP Case 2 95% Capture Including EGR	GEGP Case 1 95% Capture Including EGR	GEGP Case 1 95% Capture Including EGR
NGCC+CCS Plant Net Power	MWe	646	638	640	556.9	556.9
NGCC+CCS Plant Aux Load	MWe	44.1	52.3	53.5	47.6	47.6
NGCC+CCS Plant Net Efficiency	% HHV	47.7	47.1	47.2	44.54	44.54
CO_2 Product Flowrate	tonne/day	5,373	4,683	4,688	4,466	4,466
CCS CapEx	$MM	619	400	360	1,047	1,498
CO_2 Compression CapEx	$MM	60	32	32	152	219
Total CCS + Compression CapEx	$MM	678	432	392	1,199	1,716
OPEX (variable + fixed)	$MM/year	68	63	63	37	40
CCS Specific Reboiler Duty	GJ/tonne CO_2	2.78	3.10	2.77	2.70	2.70
CCS Plant Electrical Power Consumption	MW	10.6	19.1	20.3	18.4	18.4
CO_2 Compression Electrical Power Consumption	MW	17.1	16.8	16.8	20.8	20.8
Cost of Electricity (COE) incl Transport & Storage	$/MWh	74.38	68.20	67.43	73.62	86.56
COE % Reduction vs Case B31B	%	Base	8.3	9.4	1.0	---
Breakeven CO_2 Sales Price excl Transport & Storage	$/tonne CO_2	79.57	61.39	59.68	76.43	100.18
Breakeven CO_2 Sales Price % Reduction vs Case B31B	%	Base	22.9	25.1	3.9	---
Breakeven CO_2 Emission Penalty	$/tonne CO_2	102.34	87.43	85.48	88.46	112.77
Breakeven CO_2 Penalty Reduction vs Case B31B	%	Base	15.0	16.9	13.6	---

Table 31: Summary of TEA

The cost components associated with the breakeven CO_2 sales price of $100.18 (last column in Table 31) are available below in Figure 33.

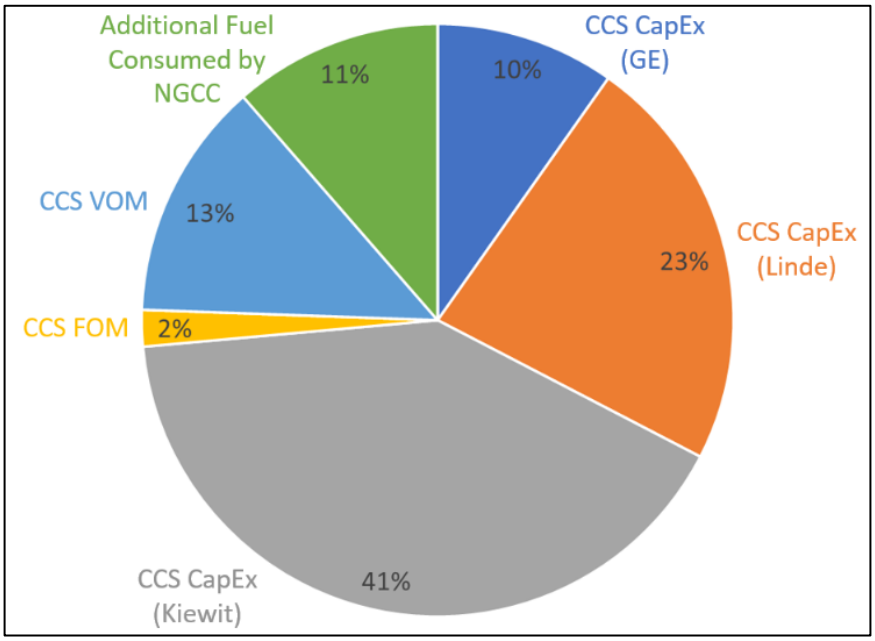

Figure 33: Breakdown of Break-even CO_2 Sales Price Excluding T&S

3.2.1.5 Maximum Carbon Capture Efficiency

As previously mentioned, this FEED study focused on a carbon capture efficiency of 95%.

Achieving capture rates higher than 95% at Barry Unit 6 is possible with the existing Linde technology but requires a near exponential increase in CCS equipment size and cost, solvent circulation flow rates, and specific steam consumption (lb of steam per lb of captured CO_2).

The incremental cost of going from 96% to 97% will be substantially greater than the incremental cost of going from 95 to 96%. The same is true for the CCS performance penalty (CCS aux loads plus loss of MW in ST due to reboiler steam requirements). Figure 34 shows the incremental impact on the break-even CO_2 sales price as the CO_2 capture rate is increased from 90% to 98%.

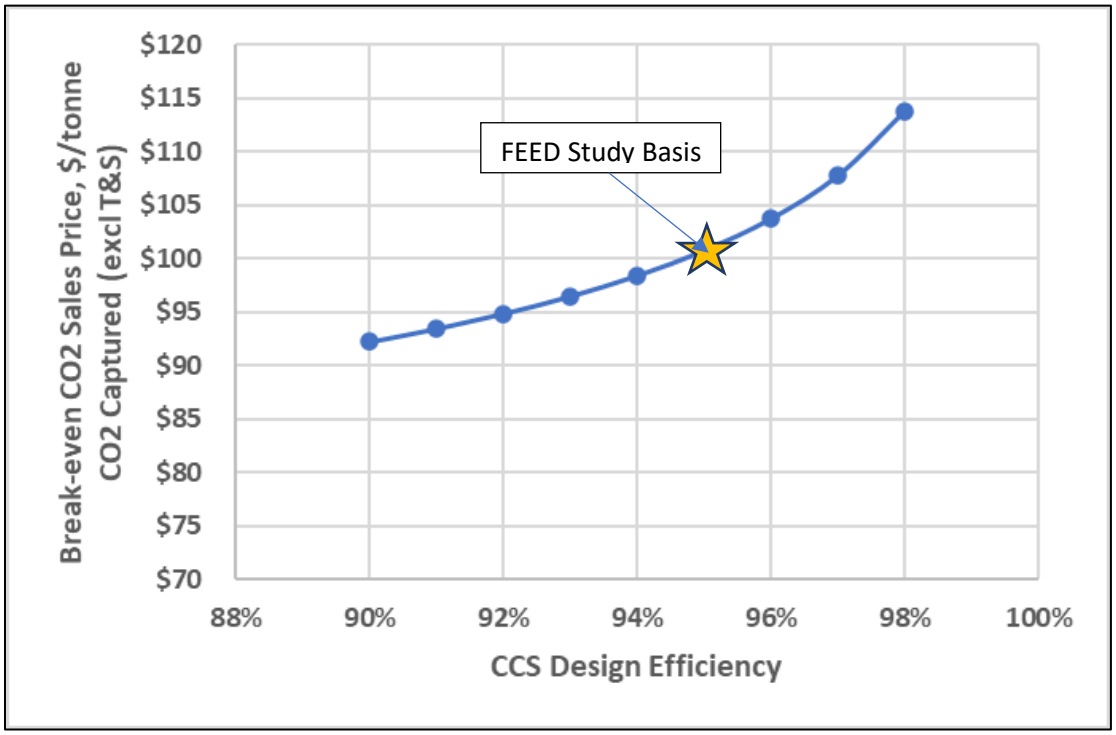

Figure 34: Projected Change in Break-Even CO2 Sales Price with Increase in CCS Capture Efficiency

3.2.1.6 Sensitivity Studies

As discussed in the prior section, the maximum viable capture efficiency at Barry Unit 6 is 98%. Reaching 99% CO_2 capture (or 99% reduction in carbon footprint) requires additional processes. There are currently two viable pathways from 98% to 99% capture:

- Blended H2 fuel plus direct air capture (DAC)
- Use of renewable natural gas (RNG)

Blended H2 fuel plus Direct Air Capture (DAC)

Include blended H2 fuel – current short to mid-term targets published by the US EPA are targeting 30% (by volume) H2 blended fuels. This will reduce the CO_2 produced by the GT combustors by approximately 8%.

Information on blended fuel:

- 30% by volume H2 is 3.75% by weight
- H_2 heating value is approximately 2.3 times greater per unit weight
- The GTs will still require approximately the same heat input in Btu/hr
  - Net GT fuel consumption will be reduced 4.73% in mass flow, due to the higher specific heating value resulting from the blended fuel
  - Methane fuel flow will be reduced by 8.3%
- The CO2 produced by the blended fuel will decrease by 8.3%

The result of burning the blended hydrogen/methane fuel will decrease the CO_2 concentration from 7% volume to approximately 6.4% with higher levels of moisture due to the combustion of hydrogen. The resulting CCS efficiency capability will decrease slightly, but the overall carbon footprint will decrease by 5-7%. This results in an equivalent CO_2 capture/reduction efficiency of 98.1% to 98.15%. Additional technology is required to get to 99%. The cost of applying 30% blended hydrogen is modest on both capital and operating costs. On CapEx, there are 3 moderate changes needed in the plant: a blending skid is required to mix the pipeline natural gas and the hydrogen (assuming that they are conveyed to the plant in separate pipelines), the GT inlet fuel manifolds and gas piping must be upgraded for both material compatibility and slightly larger volumetric flows, and the GT flame detectors and software must be upgraded to non-optical detectors. The operating costs increase because the hydrogen fuel is 4-5 times the cost of the pipeline natural gas, so the 30% blended fuel cost goes up by ~15-20%.

In order to further reduce the stack CO_2 levels, it is recommended to add direct air capture to the exhaust stream leaving the CCS absorber. With a 98% CCS system, the CO_2 concentration leaving the CCS absorber is approximately 0.14%vol. The DAC would need to reduce the exhaust flue gas from 0.14%vol to a net exhaust concentration of 0.07%vol. Assuming the 30% hydrogen is applied with the 98% CCS and a net 98.15% reduction in stack CO_2 emissions, the DAC would need to be sized for 1.9 tonnes/hr, or 16,644 MT/yr. This will result in a large increase in CapEx, and a hit to NGCC+CCS output of ~14GJ/tonne CO_2, or about 7.4MW additional DAC auxiliary electrical loads. While some literature suggests that the electrical load may be able to go down to ~8.8 GT/tonne, it is at 14GT for today's technology.

Renewable Natural Gas (RNG)

The second viable pathway to increase the 98% CCS efficiency to a 99% reduction in CO_2 emissions is through the application of negative emissions technology (NET) – specifically through the use of a blended renewable natural gas (RNG). Depending on the source (animal manure vs agricultural crop waste) the amount of RNG required to extend the CCS 98% maximum capability to an equivalent 99% is 10-40% RNG. 10% RNG is needed if the source of the RNG is from processed animal manure, whereas 40% RNG is needed if the source of the RNG is from process agricultural crop waste. The CapEx is relatively low, as the only changes needed in the plant is the addition of a blending skid to mix the pipeline natural gas and the RNG (assuming that they are conveyed to the plant in separate pipelines), upgraded fuel scrubbing for the incoming RNG, and upgraded fuel gas chromatograph to monitor fuel composition. There is no change in the plant auxiliary electrical loads or NGCC+CCS output, but the fuel is significantly more expensive with RNG expected to cost 5-8 times pipeline natural gas. This drives up the blended fuel cost by at least 40%, and perhaps as much as 280%. This will result in a very large rise in operating fuel costs and push the LCOE and CO_2 break-even sales price much higher.

The cases presented below for levelized cost of electricity are the same 90-98% cases shown in Figure 35, with 40% EGR and CCS. The 99% points (marked with blue diamonds and green triangles) represent:

- **Pathway 1**
  - 30% blended hydrogen at $20/MM Btu and DAC to reach 99% CO_2 reduction
- **Pathway 2**
  - 10% blended manure RNG at $20-32/MM Btu to reach 99% effective CO_2 reduction
  - 40% blended crop waste RNG at $20-32.MM Btu to reach 99% effective CO_2 reduction

Additional plots can be found in Appendix A including projections of:

- Net NGCC+CCS output
- Net NGCC+CCS HHV heat rate
- Total as-spent cost (TASC) for the addition of the CCS
  - In the case of 99% reduction, TASC while be shown for CCS and NET individually
- Levelized cost of electricity (LCOE)
- Break-even CO_2 sales price

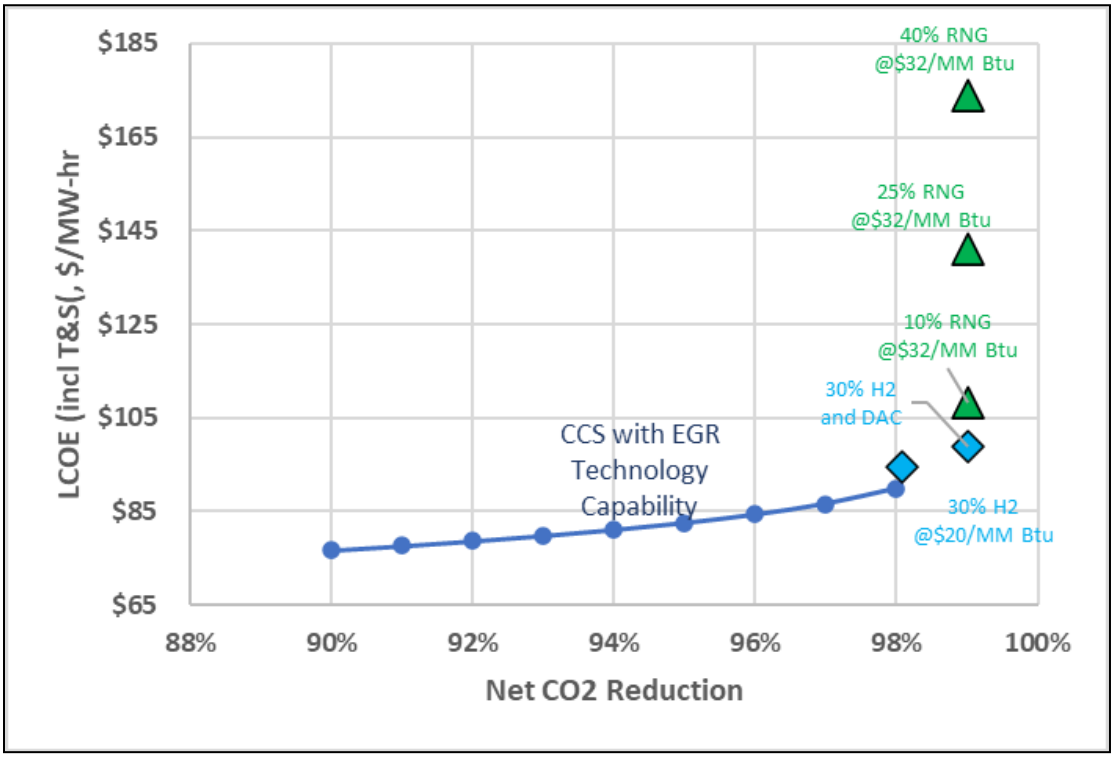

Figure 35: Projected Change in LCOE with Increase in CCS Capture Efficiency

3.2.2 Summary of LCA

The Life Cycle Analysis dated 3/18/2024 is available in Appendix VV. This analysis was performed by Ramboll and contains information such as lifecycle inventory analysis, lifecycle impact assessment, and lifecycle interpretation. A summary of this analysis is provided below.

LCA is a hard science, and as such it must be carried out with rigorous methods, consistent boundary assumptions, and well-trained professionals. To this end GEGP elected to use Ramboll Americas Engineering Solutions and their team of life cycle assessment certified professionals to produce the LCA for Barry Unit 6.

The scope of this analysis is to establish the cradle-to-delivered electricity life cycle impacts of the NGCC+CCS with negative emissions technologies, namely, renewable natural gas. The LCA scope consists of two main cases:

- NGCC with 95% capture – This is the final design case available in Table 12.
- NGCC with 98% (max) capture and RNG – This new case includes ~ 78% pipeline natural gas and ~ 22% RNG sourced from landfill gas to achieve net zero upstream fuel impacts and direct emissions.

The LCA concludes that the application of NGCC+CCS with 95% capture will result in a reduction in specific CO_2 emissions (kg CO_2 per MWhr) of 77%. The LCA has further concluded that achieving net zero upstream and direct emissions from the fuel will require the combination of maximum CCS capture efficiency (98%) and the use of 22% RNG blended with 78% pipeline natural gas. It should be noted that this comparison is for benchmarking purposes only due to certain limitations, namely, the comparison is only for the cradle-to-gate life cycle impacts.

3.3 Technology Environmental Health and Safety Risk Assessment

The Technology Environmental Health and Safety Risk Assessment dated 11/27/2023 is available in Appendix WW. This assessment was performed by Ramboll and contains information such as inventory and potential hazards, regulatory framework, and risk management. A summary of this assessment is provided below.

EHS is a hard science, and as such it must be carried out with rigorous methods, consistent boundary assumptions, and well-trained professionals. To this end GEGP elected to use Ramboll Americas Engineering Solutions and their team of EHS registered environmental managers to produce the technology environmental health and safety risk assessment for Barry Unit 6.

This technological review is focused on the incremental environmental and safety risks and benefits of the capture facility based on the proposed materials and process. Major concerns include solvents that are under increasing scrutiny by the U.S. Environmental Protection Agency (EPA) and National Institute for Occupational Safety and Health (NIOSH). Exposure to other chemicals is also addressed, as appropriate. Unanticipated or uncontrolled environmental, health and safety (EH&S) risks were evaluated so commercialization of carbon dioxide capture technologies will not impede project development and implementation.

Specific risk management strategies for the project include controls to protect human health, the environment, and ecological considerations for air emissions, water effluent, waste streams (including selection of a licensed waste incineration facility) and safe handling and protection measures for storage and handling of hazardous chemicals and toxic substances (including update of toxic release inventory reporting and emergency action plans for the new chemical hazards present).

- The project may require a major modification of the existing air permit. New air modelling will need to be performed to address the amines and aldehydes reviewed in this technology review to demonstrate protection of the environment and human health.
- The project's basis of design stipulates the addition of biological treatment to support the reduction of pollutant loading that may be present to acceptable levels protective of the environment, and human and aquatic health. In preparation for permit application, best engineering judgement and/or vendor estimations will be required to be included within the permit modification package for Alabama Department of Environmental Management (ADEM's) consideration. The project will need to comply with appropriate pollutant mitigation technologies, which will be set through the permitting process.
- The project will generate hazardous waste in the form of spent activated carbon filters associated with treatment of the CO_2 absorber and potentially unused solvent. Both of these waste streams will require disposal via incineration. Appropriate vendors will need to be selected and identified as part of the next project phase.

The project will need to share a Supplier Data Sheets (SDSs) for OASE blue®, antifoam, and sodium hydroxide. Training, labelling and inclusion of these chemical hazards needs to be included in worker safety and health plans. The project will also need to provide appropriate PPE and training for the handling of these chemical hazards. Further, the project will need to continue toxic release inventory reporting and update the emergency action plans to reflect the additions of these project components.

4 Results for Task 4 – Public Policy Considerations

4.1 Environmental Justice Analysis

The Environmental Justice Analysis dated 11/29/2023 is available in Appendix XX. This analysis was compiled by the WSP USA (a division of WSP Global, Inc.) Communications and Involvement Practice in collaboration with the WSP Equity Center of Excellence with support from Southern Company Services staff. The report contains information such as background, stakeholder mapping, anticipated impacts on environmental justice populations, and community and stakeholder engagement. A summary of this analysis is provided below.

This report serves as the stakeholder mapping and impacts analysis component of the preliminary environmental justice (EJ) analysis for the FEED study of a proposed carbon capture project at Barry Unit 6 and has been developed in accordance with Presidential Executive Order 13985: Advancing Racial and Equity Support for Underserved Communities Through the Federal Government.

The greatest value and success in community and stakeholder engagement is founded in facilitating meaningful interactions with a diversity of stakeholders across sectors and scales (e.g., elected officials, sovereign tribal nations, businesses, civic and community groups, media, regulatory agencies environmental justice populations, and generally, the local community) throughout the planning and decision-making process.

4.2 Economic Revitalization and Jobs Creation Outcome Analysis

The Economic Revitalization and Jobs Creation Outcome Analysis dated 11/27/2023 is available in Appendix YY. This analysis was performed by Ramboll. A summary of this analysis is provided below.

This Economic Revitalization and Job Creation Outcome Analysis has been completed to answer the following key questions posed in the Funding Opportunity Announcement FOA-0002515:

- **Apart from job creation, how will the project and/or the associated technology development and deployment support economic revitalization?**

  Southern Company Services (SCS) has invested millions in local non-profits through both corporate giving (including giving through its corporate foundations: the Alabama Power Foundation, Georgia Power Foundation, and Southern Company Foundation), and through social justice initiatives focused on education, the environment, and the community. SCS and its foundations have pledged $225 million through 2025 to advance equity and social justice in communities where it operates. Its investment strategies target four key areas: economic empowerment, education equity, criminal justice equity, and energy empowerment.

- **How many jobs could potentially be created by the project and/or associated technology development and deployment?**

  The Project estimates that 18 long-term technical jobs will be created in addition to the 257 employees (excluding contracted and temporary workers) currently employed at the existing natural gas combined cycle (NGCC) facility at Plant Barry. New employees in applicable roles will have the opportunity to join the existing union at Plant Barry under the International Brotherhood of Electrical Workers (IBEW); 180 current employees at natural gas combined cycle facility at Plant Barry – including operations, mechanics, and instrumentation/electrical personnel – are members of IBEW.

- **What will be the nature of the created jobs, including the extent to which they will include clean energy jobs?**

  Based on initial estimates, 18 full-time technical jobs will be created for the operation of the complete carbon capture facility, and approximately 1,750 construction jobs during the initial construction phase (lasting one year, full-time each). The full-time jobs include plant control operators, mechanics/welders, electrical & instrumentation journeymen, and other specialists. All created construction and operation jobs can be classified as clean energy jobs, given their direct influence on the operations of the CCS facility.

- **To what extent will the created jobs be at the prevailing wage?**

  All created jobs will be at the prevailing wage. Technical-economic analysis for the project was conducted with the assumption that labor wages paid would be at union rates. These wages were then checked and compared with prevailing wages to confirm that they meet the current prevailing wages in the study area (Mobile County, Baldwin County, and Washington County, Alabama) for the applicable levels.

- **To what extent will the created jobs be located in power plant and coal communities that are economically distressed and/or have been harmed by the adverse environmental impacts of the energy industry?**

  The project will ultimately aid in bringing energy transition jobs into the community, reducing the local labor force's dependence on fossil fuel jobs as the energy industry transitions to renewable

energy. The project will also serve to reduce emissions and pollution typically associated with fossil fuel-based energy generation, offering a solution to address the harmful environmental impacts (including elevated asthma, wastewater discharge, air toxic cancer risk, particulate matter, and climate hazards loss of life rates) currently experienced by the community. Job creation at the prevailing wage and workforce development opportunities offered by the project will address the economic needs of the community, including disadvantages communities that will benefit from targeted recruiting efforts.

- **What recruitment strategies will be used for: a) workers from the local community, and b) individuals who belong to groups that are historically underserved or underrepresented?**

  The proposed project anticipates utilizing the following recruitment strategies in both Mobile County and the larger Alabama area, based on experience and existing community relationships at the Plant Barry NGCC facility: recruiting young people entering the workforce through high school partnerships; recruiting young people entering the workforce through community college partnerships; recruiting young people entering the workforce through university partnerships; recruiting women candidates through professional associations; and recruiting minority candidates through associations with a Diversity Equity & Inclusion focus. Southern Company has pre-existing relationships with all of these mentioned organizations.

- **Will the skills possessed by the existing labor force be adequate for the created jobs, or will training be required for those workers?**

  Local unemployment data shows that there is a sufficient qualified applicant pool in Mobile County, AL alone to supply about 645 construction workers (about 35% of the expected quantity required for the construction phase) and all 18 long-term technical operations employees. SCS has a detailed recruitment strategy targeting professionals across age and ethnic demographics in the larger Alabama area, which would allow the Project to obtain additional qualified employees in neighboring regions.

  SCS is committed to supporting employees during its just transition. The company's goal is to provide opportunities to support any employee who may be affected by the fleet's transition to low-carbon solutions; this may involve reassignment to a similar role at another company facility or receiving training to help them transfer to another part of the company.

Appendix A

Techno-Economic Analysis

Techno-Economic Analysis

Retrofittable Advanced Combined Cycle Integration for Flexible Decarbonized Generation

Site: Alabama Power/Southern Co Plant Barry Unit 6



Submitted by PI: John Sholes
CCS Systems Integration Leader
864-293-0353
john.sholes@ge.com
Signed:

Updated May 26, 2024

GT output was correct on pages A-14 and A-16

Foreword:

This report was created and issued under the DOE funded programDE-FE0032131.

Document Classification

This report is a public document.

This space intentionally left blank

Contents

Acronyms 4
NGCC/CCS Process Block Diagram 5
NGCC/CCS Operating Philosophy and the TEA impact 6
NGCC/CCS Process Heat Balance Table 8
NGCC/CCS Performance Summary 13
NGCC/CCS Target Efficiency Discussion 14
NGCC/CCS Auxiliary Loads Summary 15
NGCC/CCS Air Emissions 16
NGCC/CCS Carbon Balance 17
NGCC/CCS Water Balance 18
ISBL Plot Plan 19
OSBL Equipment List 34
EGR Equipment List 37
Capital Cost Estimate 38
CAPITAL COST OF BASE NGCC 41
CAPITAL COST ESTIMATING PROCESS 41
CAPITAL COST BASIS ASSUMPTIONS 44
CAPITAL COST RESULTS 50
Maintenance Cost Estimate 54
Cost of Capture and CO_2 Avoided Cost 55
TECHNO-ECONOMIC ANALYSIS ASSUMPTIONS 55
TECHNO-ECONOMIC ANALYSIS RESULTS 56
TECHNO-ECONOMIC ANALYSIS DISCUSSION 57
Maximum Carbon Capture Efficiency 58
Sensitivity Studies – 90% to 99% 59
Sensitivity Studies – CCS and EGR Capability 61
Sensitivity Studies – 2 Pathways to 99% with additional technology 63
Sensitivity Studies – NGCC/CCS Net Output plot 90-99% 65
Sensitivity Studies – Lifecycle Cost of Electricity plot 90-99% (2018$) 66
Sensitivity Studies – Lifecycle Cost of Electricity plot 90-99% (2023$) 67
Sensitivity Studies – Break-even CO_2 Sales Price plot 90-99% (2018$) 68
Sensitivity Studies – Break-even CO_2 Sales Price plot 90-99% (2023$) 69

Acronyms

BOP –	**Balance of Plant**
CapEx –	**Capital Expense**
CC –	**Combined Cycle**
CCS –	**Carbon Capture System**
CCW –	**Cooled Cooling Water**
CF –	**Capacity Factor**
CO_2 T&S –	**CO_2 Transportation and Storage**
CRH -	**Cold Reheat (Steam)**
CRV –	**Combined Reheat Valve (at Hot Reheat)**
CSCV –	**Combined Stop and Control Valve (at HP inlet)**
CW –	**Circulating (Cooling) Water**
DB –	**Duct Burner in HRSG to produce additional steam**
DCC –	**Direct Contact Cooler**
DLN –	**Dry Low NOx (combustor)**
EC –	**Gas Turbine inlet Evaporative Cooler**
EGR –	**Exhaust Gas Recirculation**
FEED –	**Front End Engineering Design**
FOC -	**Fixed Operating Costs**
GEGP –	**General Electric Gas Power**
GSU –	**Generator Step Up Transformer**
GT –	**Gas Turbine**
HHV –	**Higher Heating Value of fuel**
HMB -	**Heat and Mass Balance**
HP –	**High Pressure Steam Turbine section**
HPSH -	**High Pressure Superheater in HRSG**
HR –	**Heat Rate**
HRH –	**Hot Reheat (inlet to IP Steam Turbine section)**
HRSG –	**Heat Recovery Steam Generator**
IP –	**Intermediate Pressure Steam Turbine section**
IPSH -	**Intermediate Pressure Superheater in HRSG**
ISBL –	**Inside Battery Limits**
LCA –	**Life Cycle Analysis**
LCOE –	**Levelized Cost of Electricity ($/MW-hr)**
LHV –	**Lower Heating Value of fuel**
LP –	**Low Pressure Steam Turbine section**
LPSH -	**Low Pressure Superheater in HRSG**
MECL –	**Minimum Emissions Compliance Load on Gas Turbine**
MT –	**Metric Tonne (1000 kg)**
NGCC –	**Natural Gas Combined Cycle**
NPV –	**Net Present Value**
OpEx –	**Operating Expenses**
O&M –	**Operation and Maintenance**
OSBL –	**Outside Battery Limits**
PA (SIPA) –	**Power Augmentation to Gas Turbine with steam injection to combustor**
PCC -	**Post Combustion Capture**
P&ID -	**Piping and Instrumentation Diagram**
SCR –	**Selective Catalytic Reduction (in HRSG)**
SH –	**Superheater (HRSG)**
ST –	**Steam Turbine**
TEA –	**Techno-Economic Analysis**
VOC -	**Variable Operating Costs**
XO –	**Steam Turbine Crossover (at input to double flow LP section)**

NGCC/CCS Process Block Diagram

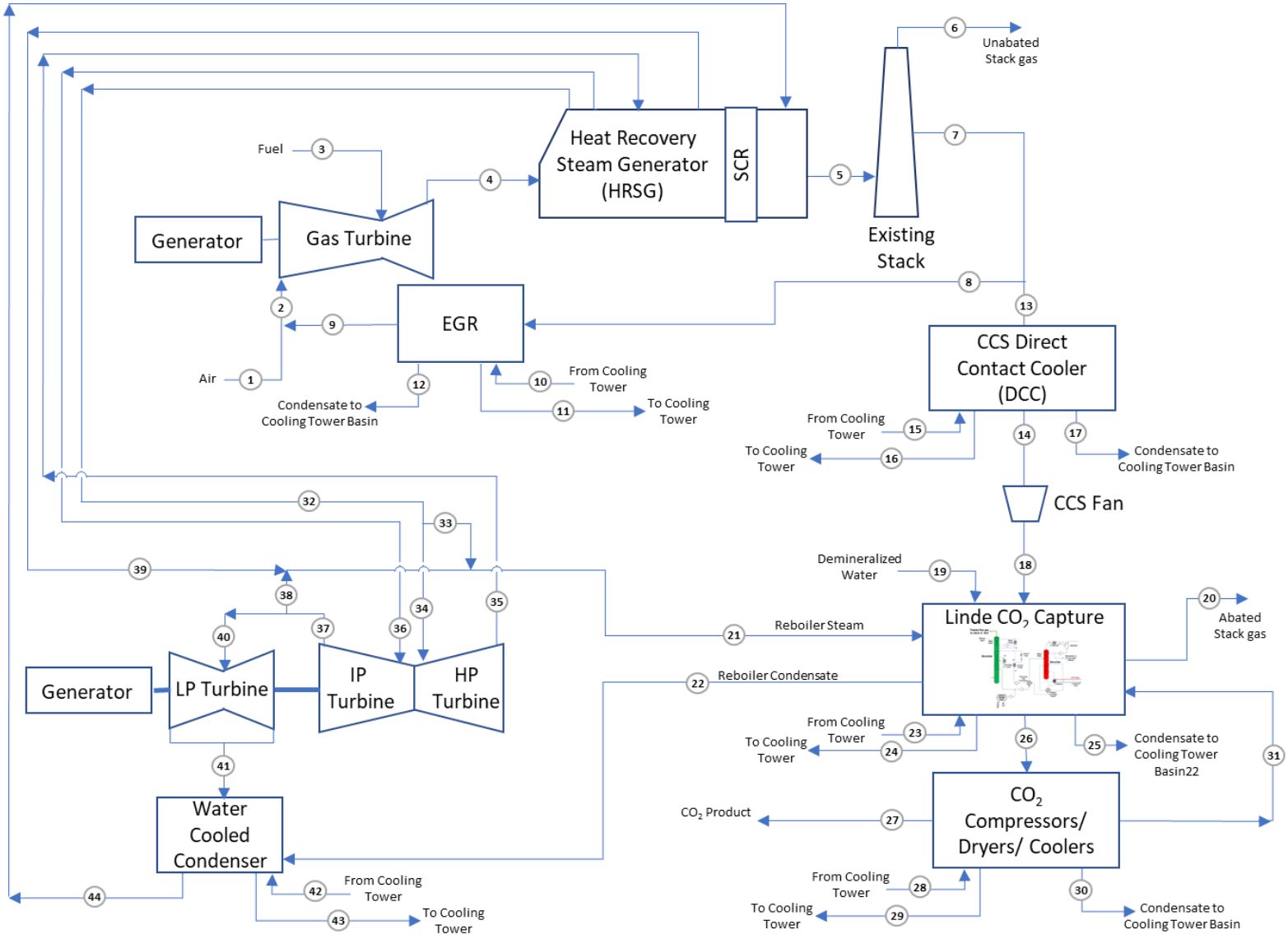

NGCC/CCS Operating Philosophy and the TEA impact

The NGCC/CCS process block diagram does not explicitly shown, but there is a dedicated CCS cooling tower that will be added to the current plant. The cooling heat load will increase by approximately 50%. The CCS will see a 100% increase in Cooling Tower capability. This is so that that during CCS operation none of the cooling water from the current Cooling Tower will be diverted to the CCS, so that if the CCS trips that cooling water will need to be re-directed back to the ST Steam condenser. This significantly reduces the risk of tripping the ST when a CCS trip occurs. This also increases the CCS cost by approximately $20MM.

Also, the NGCC/CCS is configured to allow periodic peak output to be generated by the plant when power pricing spikes relative to 45Q CO_2 tax credits that are flat.

The existing plant is operated normally up to base load without use of the HRSG duct burner. Originally the plant was designed with some Steam Turbine excess capacity that could be leveraged for intermittent peaking as demand required. The HRSG duct burners were sized for large amounts of duct firing to both support the intermittent ST peaking and during times of extraordinary demand to provide high pressure steam to the GT for Steam Injection Power Augmentation (SIPA). Subsequent changes to the GT have produced more baseload steam and have virtually eliminated the intermittent ST peaking capability, but the SIPA capability remains.

The application of CCS to the NGCC changes performance in 2 fundamental ways: 1st it reduces the Steam Turbine output by over 40MW due to the steam extraction needed to operate the CCS reboiler that would otherwise contribute to the ST Generator output; 2nd it adds a significant amount of new auxiliary loads of over 30MW including the new CO_2 compressors and the CCS flue gas fan. The CCS is being integrated into Barry 6 in such a way that if the CCS is shut down, the ST will regain most of the 70+MW of CC net output. To compensate for this large capacity reduction, the NGPP/CCS integration includes a recommendation of a GT upgrade of .05 Compressor with DLN 2.6+ Flex and AGP Tech HGP that will recover, on average, all of the lost plant capacity (existing average NGCC Baseload capacity is 551MW, new average upgraded NGCC/CCS Baseload capacity is 553 MW).

As the new NGCC/CCS operates with ~95% of CO_2 captured, the plant is anticipated to operate at high loads for >80% of the time. However, the load demand is still expected to vary, and the NGCC/CCS plant will need to react to that varying load demand.

The new normal operating profile is expected to be:

- At or below CCS Baseload Demand –
  - operate NGCC with CCS ON
  - EGR ON if >70% GT load, optional <70% load
  - Evaporative Cooler (EC) ON for ambient temperatures above 50°F
  - **HRSG Duct Burner and SIPA OFF (permissive OFF)**
  - Maximum use of CO_2 (45Q) Tax Credit for Captured CO_2
  - No GT Maintenance Factor
- Above CCS Baseload demand (up to ~76MW above CCS Baseload)
  - Turn CCS OFF – into Hot Standby – gains >70MW of CC Net
  - Turn EGR OFF
  - Loss of CO_2 (45Q) Tax Credit for Captured CO_2
  - Keep Evaporative Cooler (EC) ON for ambient temperatures above 50°F
  - No GT Maintenance Factor
- More Above CCS Baseload demand (up to ~100MW above CCS Baseload)
  - Extend GT into Peak Airflow
  - Keep CCS in Hot Standby
  - Keep EGR OFF
  - Keep Evaporative Cooler (EC) ON for ambient temperatures above 50°F
  - Loss of CO_2 (45Q) Tax Credit for Captured CO_2
  - Modest CC Efficiency Loss
- Further Above CCS Baseload demand (up to ~125MW above CCS Baseload)

- Extend GT into Peak Load, and then extended peak mode
- Keep CCS in Hot Standby
- Keep EGR OFF
- Keep Evaporative Cooler (EC) ON for ambient temperatures above 50°F
- Loss of CO_2 (45Q) Tax Credit for Captured CO_2
- Modest GT Maintenance Factor

- Much Further Above CCS Baseload demand (up to ~150MW above CCS Baseload)
  - Keep GT in Extended Peak Mode
  - Engage HRSG Duct Burner
  - Add Steam to GT SIPA
  - Keep CCS in Hot Standby
  - Keep EGR OFF
  - Keep Evaporative Cooler (EC) ON for ambient temperatures above 50°F

The result of the new operating profile is that while the maximum potential load increase is substantially higher, the actual operation of the HRSG duct burner will be fewer hours per year, and well as fewer hours per year on SIPA, with lower corresponding impacts to GT maintenance factors. Also, the result of the profile is that the operation of the CCS and EGR are mutually exclusive to the operation of the HRSG Duct Burner and GT SIPA.
There are several pre-requisites that result from the new configuration:

- Stable ST Operation with GT > MECL is required to operate EGR
- EGR operating is required for GT>70% load if CCS is ON
- EGR OFF is required to operate HRSG Duct Burner

NGCC/CCS Process Heat Balance Table

Block Diagram Point		1	2	3	4	5	6	7	8	9
Source of Info										
Description		GT Fresh Air Inlet	GT Inlet after EGR	GT fuel	GT Exhaust Gas	HRSG Exhaust Gas	HRSG Stack Outlet	Flue Gas to EGR/CCS	EGR inlet flow	EGR outlet flow
Fluid		Air	Air/POC	Fuel	Flue Gas	Flue Gas	Flue Gas	Flue Gas	Flue Gas	Flue Gas
Gas/Vapor		gas	gas	gas	gas	gas	gas	gas	gas	gas
Volume Mole Fraction										
Nitrogen	%mol	0.7808	0.778	0.0028	0.7478	0.7478		0.7478	0.7478	0.7960
CO2	%mol	0.0004	0.0279	0.008	0.0666	0.0666		0.0666	0.0666	0.0709
Oxygen	%mol	0.2095	0.1547		0.0706	0.0706		0.0706	0.0706	0.0752
Water	%mol		0.0302		0.1061	0.1061		0.1061	0.1061	0.0485
Argon	%mol	0.0093	0.0093		0.0089	0.0089		0.0089	0.0089	0.0095
Methane	%mol			0.9569						
Ethane	%mol			0.0214						
Propane	%mol			0.0062						
Iso-butane	%mol			0.0029						
n-Butane	%mol									
Oiso-Butane	%mol									
Iso-pentane	%mol			0.0007						
n-Pentane	%mol									
Hexanes Plus	%mol			0.0011						
Molecular Weight	lb/mol	28.97	28.89	17.0099	28.403	28.403		28.403	28.403	29.073
Flowrate (2 GTs)	lb/hr	4,794,480	7,932,240	223,934	8,156,174	8,167,794	0	8,167,794	3,262,320	3,137,760
Pressure	psia	14.7	14.7	440	15.2	14.7	14.7	14.7	14.7	14.7
Temperature	F	76.05	75.5	80	1166	205.9		205.9	205.9	86.8

Block Diagram Point		10	11	12	13	14	15	16	17	18
Source of Info										
Description		EGR CW Inlet	EGR CW Outlet	EGR Condensate	Flue Gas to CCS	CCS DCC Outlet	DCC CW Inlet	DCC CW Outlet	DCC Condensate Outlet	CCS Fan Outlet
Fluid		water	water	water	Flue Gas	Flue Gas	water	water	water	Flue Gas
Gas/Vapor		liquid	liquid	liquid	gas	gas	liquid	liquid	liquid	Gas
Volume Mole Fraction										
Nitrogen	%mol				0.7478	0.7791				0.7791
CO2	%mol				0.0666	0.0694				0.0694
Oxygen	%mol				0.0706	0.0736				0.0736
Water	%mol	1	1	1	0.1061	0.0686	1	1	1	0.0686
Argon	%mol				0.0089	0.0093				0.0093
Methane	%mol									
Ethane	%mol									
Propane	%mol									
Iso-butane	%mol									
n-Butane	%mol									
Oiso-Butane	%mol									
Iso-pentane	%mol									
n-Pentane	%mol									
Hexanes Plus	%mol									
Molecular Weight	lb/mol	18.015	18.015	18.015	28.403	28.839	18.015	18.015	18.015	28.839
Flowrate (2 GTs)	lb/hr	9,798,140	9,798,140	125,280	4,905,474	4,780,288	15,116,112	15,116,112	125,186	4,780,288
Pressure	psia	67.75	67.75	65.99	14.34	14.05	67.75	67.75	65.99	15.56
Temperature	F	86	108.6	108.6	203	100.58	86	102.2	95.77	121.22

Block Diagram Point		19	20	21	22	23	24	25	26	27
Source of Info										
Description		Demin Water to Absorber Water Wash	CCS Flue Gas Outlet	Steam to CCS Reboiler	CCS Reboiler Condensate	CO_2 Capture CW Inlet	CO_2 Capture CW Outlet	CO_2 Capture Condensate	Wet CO_2 after Capture	Dry CO_2 after Compressors
Fluid		water	Flue Gas	steam	water	water	water	water	CO_2	CO_2
Gas/Vapor		liquid	gas	vapor	liquid	liquid	liquid	liquid	gas	liquid
Volume Mole Fraction										
Nitrogen	%mol		0.7977							
CO2	%mol		0.0023						0.9674	0.999999696
Oxygen	%mol		0.0659							
Water	%mol	1	0.1495	1	1	1	1	1	0.0326	3.03679E-07
Argon	%mol		0.0067							
Methane	%mol									
Ethane	%mol									
Propane	%mol									
Iso-butane	%mol									
n-Butane	%mol									
Oiso-Butane	%mol									
Iso-pentane	%mol									
n-Pentane	%mol									
Hexanes Plus	%mol									
Molecular Weight	lb/mol	18.015	27.51	18.015	18.015	18.015	18.015	18.015	43.164	44.00999
Flowrate (2 GTs)	lb/hr	37,786	4,336,276	587,925	587,925	34,802,398	34,802,398	0	489,432	482,674
Pressure	psia	95	14.7	72.52	116	67.75	67.75	34.81	31.91	2214.7
Temperature	F	65	108.1	330.32	276.1	86	101.17	104.4	103.9	115

Block Diagram Point		28	29	30	31	32	33	34	35	36
Source of Info										
Description		CO_2 Compressor CW Inlet	CO_2 Compressor CW Outlet	CO_2 Compressor Condensate	CO_2 Capture Recirc	HRSG HP Steam Outlet	HP Steam to CCS Reboiler	HP Steam to HP Turbine	HP Turbine Exhaust	Hot Reheat to IP Turbine
Fluid		water	water	water	CO2	steam	steam	steam	steam	steam
Gas/Vapor		liquid	liquid	liquid	gas	vapor	vapor	vapor	vapor	vapor
Volume Mole Fraction										
Nitrogen	%mol									
CO2	%mol				0.9967					
Oxygen	%mol									
Water	%mol	1	1	1	0.0033	1	1	1	1	1
Argon	%mol									
Methane	%mol									
Ethane	%mol									
Propane	%mol									
Iso-butane	%mol									
n-Butane	%mol									
Oiso-Butane	%mol									
Iso-pentane	%mol									
n-Pentane	%mol									
Hexanes Plus	%mol									
Molecular Weight	lb/mol	18.015	18.015	18.015	43.924	18.015	18.015	18.015	18.015	18.015
Flowrate (2 GTs)	lb/hr	7,585,292	7,585,292	6,650	108	1,122,000	33,629	1,088,371	1,059,225	1,172,703
Pressure	psia	67.75	67.75	60	14.7	1950	72.5	1950	495.8	463.5
Temperature	F	86	102.26	107.13	105.88	1023.1	330.3	1023.1	666.1	1048.7

Block Diagram Point		37	38	39	40	41	42	43	44
Source of Info									
Description		IP Turbine Exhaust	Extraction to CCS Reboiler	HRSG LP Steam Outlet	LP ST inlet	Condenser Steam Inlet	Steam Condenser CW Inlet	Steam Condenser CW Outlet	Condenser Condensate Outlet
Fluid		steam	steam	steam	steam	steam	water	water	water
Gas/Vapor		vapor	vapor	vapor	vapor	vapor	liquid	liquid	liquid
Volume Mole Fraction									
Nitrogen	%mol								
CO2	%mol								
Oxygen	%mol								
Water	%mol	1	1	1	1	1	1	1	1
Argon	%mol								
Methane	%mol								
Ethane	%mol								
Propane	%mol								
Iso-butane	%mol								
n-Butane	%mol								
Oiso-Butane	%mol								
Iso-pentane	%mol								
n-Pentane	%mol								
Hexanes Plus	%mol								
Molecular Weight	lb/mol	18.015	18.015	18.015	18.015	18.015	18.015	18.015	18.015
Flowrate (2 GTs)	lb/hr	1,194,360	370,631	130,698	813,064	814,268	59,839,000	59,839,000	1,402,193
Pressure	psia	72.52	72.52	72.52	47.31	0.72			0.72
Temperature	F	585.5	585.7	498.4	582.0	89.9	79	92.6	89.9

NGCC/CCS Performance Summary

Performance Summary	
Gas Turbine Output (each of 2), kW	207,545
Steam Turbine Output, kW	189,728
Total Gross Power, kW	604,818
NGCC Auxiliary Loads, kW	8,719
CO2 Capture/Removal Auxiliaries, kW	18,356
CO2 Compression, kW	20,824
Total NGCC/CCS Auxiliary Loads, kW	47,899
Net NGCC/CCS Power, MW	**556.919**
HHV Net NGCC/CCS Plant Efficiency, %	**44.54%**
HHV Net NGCC/CCS Plant Heat Rate, Btu/kW-hr	7,660.3
LHV Net NGCC/CCS Plant Efficiency, %	49.35%
LHV Net NGCC/CCS Plant Heat Rate, Btu/kW-hr	6,913.6
HHV Thermal Input, MM Btu/hr	4,266.152
LHV Thermal Input, MM Btu/hr	3,850.318
CO2 Captured, lb/hr	482,674
CO2 Emitted, lb/hr	25,404

NGCC/CCS Target Efficiency Discussion

As reported out in the 3rd quarter 2022 progress report, the Plant Net Efficiency Milestone was set incorrectly by GE. It has not been changed, but the following explanation was provided to better help understand the status (~44%) vs. the target (47%), where the correct target would have been 44%.

The overall project Milestone goal was set at 47.0% (HHV) efficiency. During further discussion in the monthly status reviews in 2022 with the DOE Project Manager, GE summarized that the 47% goal would not likely be met. GE was in the process of investigating both the source of the 47% Milestone, the supporting assumptions, and likely cause of the large gap. This section is the summary of that effort.

The net efficiency is a ratio of the Plant Net Output (MW) divided by the Plant Heat Input (MW-thermal). The Plant Heat Input is largely unaffected by the application of carbon capture, including the application of EGR. Plant Barry 6 (host site) was designed as a ~600 MW / 51.1% Plant Net Output and Efficiency.

With the addition of CCS to Plant Barry, two factors change the Plant Net Efficiency:

- Steam Turbine Generator output drops due to extracted steam sent to the CCS; and
- Plant Auxiliary Loads increase due to CCS CO2 compression and other CCS loads.

Originally (for the FEED study application), it was estimated that the Steam Turbine Generator output would drop ~46 MW, while the CCS auxiliary loads would be 37.1 MW. This resulted in a drop in Plant Gross Efficiency (which factors in Total Generator Output but excluded any electrically fed auxiliary loads) of 3.9% points. The resulting drop in Plant Net Efficiency (including increase of 37.1 MW in CCS auxiliary loads) was 7.0% points.

The NGCC Plant Net Efficiency (HHV) was erroneously set as 47.2% at the onset of the project, which was 3.9% pts below the non-CCS plant (51.1%). That is, the correction applied to the Net Plant Efficiency was done using the Gross Plant impact (3.9% pts), instead of the Net Plant impact (7% pts). The 47.2% value was rounded down to 47% as a project goal for the purpose of setting milestone targets. The correct value that should have been used is 44.1% (7.0% pts reductions from 51.1 without CCS) and milestone target should have been 44.0%.

Fortunately, the correct Plant Net Efficiency (44.1%) was used to calculate Levelized Cost of Electricity (LCOE) and Breakeven CO_2 Sales Price, which are related to two other milestones, so this error was not propagated to the more significant economic measures of adding CCS.

All of the necessary inputs were available, and the values were very accurate, based on what we now know. This error was limited to the calculation and reporting of Plant Net Efficiency only.

NGCC/CCS Auxiliary Loads Summary

Auxiliary Load Summary	
Gas Turbine Output (each of 2), kW	207,545
Steam Turbine Output, kW	189,728
Total Gross Power, kW	604,818
NGCC Auxiliary Loads, kW	8,719
Condensate Pump	241
Cooling Tower Fans	457
Cooling Water Circulation Pumps	2,929
Main Step-up transformer losses	2,112
HRSG LP recirculation pumps	134
HP/IP Feedwater Pumps	2,846
CO2 Capture/Removal Auxiliaries, kW	18,356
CCS Flue Gas Fan	7,480
CCS Pumps	4,849
EGR Flue Gas Fan	2,610
CCS Cooling Tower Fans	1,990
CCS Cooling Water Circulation Pumps	1,427
CO2 Compression, kW	20,824
Total NGCC/CCS Auxiliary Loads, kW	47,899
Net NGCC/CCS Power, MW	**556.919**

NGCC/CCS Air Emissions

Air Emissions				
	ppm	kg/GJ (lb/MM Btu)	Tonne/yr (ton/yr)[A]	kg/MWh (lb/MWh)[B]
NO_x (includes SCR impact)	2 ppmvd	0.00091 (0.0021)	30.0 (33.1)	0.0072 (0.016)
Particulate		0.00083 (0.0019)	27.7 (30.5)	0.0067 (0.0147)
CO	9 ppmvd	0.00195 (0.00454)	64.8 (71.5)	0.0075 (0.0165)
CO_2		2.58 (6.01)	85,801 (94,579)	19.1 (42.0)
CO_2[C]				20.7 (45.6)

A Calculations based on an 85% capacity factor
B Emission based on gross power except where otherwise noted
C Emission based on net power

NGCC/CCS Carbon Balance

Carbon In[A]		Carbon Out[A]	
	kg/hr (lb/hr)		kg/hr (lb/hr)
Pipeline Gas	229,044 (504,956)	Stack Gas	11,523 (25,404)
Air (CO_2)	1,416 (3,122)	CO2 Product	218,938 (482,674)
Total	**230,461 (508,078)**	**Total**	**230,461 (508,078)**

A Calculations based on an 85% capacity factor

Carbon Input to Cycle (total for 2x1 7FA plant):

Inlet Air: Standard Ambient Air @ 75% relative humidity
Fuel to GT's Pipeline Natural Gas (LHV = 20866.9 Btu/lb)

95.69%vol	Methane (CH_4)
2.14%vol	Ethane (C_2H_6)
0.80%vol	Carbone Dioxide (CO_2)
0.62%vol	Propane (C_3H_8)
0.29%vol	Butane (C_4H_{10})
0.28%vol	Nitrogen (N_2)
0.11%vol	Hexane (C_6H_{14})
0.07%vol	Pentane (C_5H_{12})

With 100% complete combustion, produces 2.73662 lb CO_2 per lb fuel

Air Flow to GT's	4,846,176 lb/hr	3,122 lb/hr CO_2
Fuel to GT's	184,518 lb/hr fuel	504,956 lb/hr CO_2
EGR Recirculation Flow (40%)	3,145,096 lb/hr	338,718 lb/hr CO_2
GT Exhaust Flow	8,175,790 lb/hr	846,796 lb/hr CO_2
HRSG Exhaust	8,175,790 lb/hr	846,796 lb/hr CO_2
Flow to EGR (40%)	3,270,316 lb/hr	338,718 lb/hr CO_2
Flow to CCS System	4,905,474 lb/hr	508,078 lb/hr CO_2
Captured CO2		482,674 lb/hr CO_2 (95% Capture)
CCS Absorber Exhaust	4,336,276 lb/hr	25,404 lb/hr CO_2

Net CO2 inlet	508,078 lb/hr CO_2
Net CO2 captured	482,674 lb/hr CO_2
Net CO2 exhaust	25,404 lb/hr CO_2

Annual CO_2 Capture (based on 7446 hr/yr operation): 1.6302 MM Metric tonnes/yr

NGCC/CCS Water Balance

Water Use	Water Demand	Process Water Discharge	Internal Recycled Water	Raw Water Consumption
	kg/hr (lb/hr)	kg/hr (lb/hr)	kg/hr (lb/hr)	kg/hr (lb/hr)
EGR Direct Contact Cooler (DCC)			-56,799[A] (-125,220)	
CCS Direct Contact Cooler (DCC)			-56,783[A] (-125,186)	
CCS CO_2 Compressor Dryers			-3,016[A] (-6,650)	
Absorber Water Wash (Demin Water)	17,139 (37,736)			17,139 (37,736)
Cooling Tower Makeup	398,782 (874,752)	236,040 (520,379)	116,598 (257,056)	632,822 (1,395,131)
TOTAL	**415,921 (916,948)**	**236,040 (520,379)**	**0 (0)**	**649,961 (1,432,917)**

A – negative Process Water usage denotes condensation of water from flue gas, recycled to Cooling Tower Basis

ISBL Plot Plan

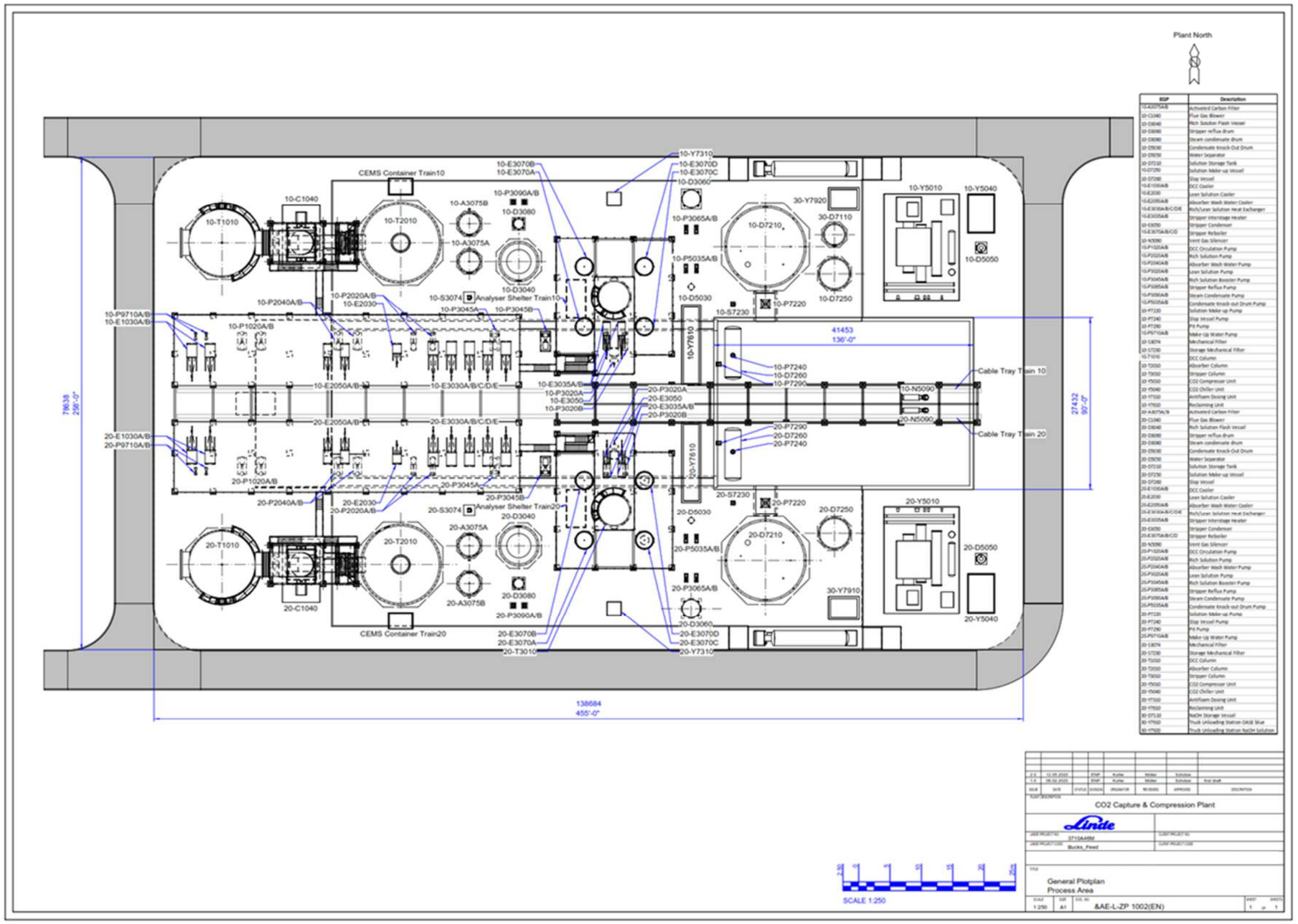

This space intentionally left blank

OSBL Equipment List

GE/SOUTHERN/LINDE ADVANCED NGCC INTEGRATION EQUIPMENT LIST

Rev. / Date: Rev. 0 - 4/14/23
CKD / Date: 4/14/23

TAG NO.	P&ID DRAWING NO.	EQUIPMENT DESCRIPTION	EQUIPMENT PARAMETERS	SPECIFICATION NO.	NOTES/COMMENTS
COOLING WATER SYSTEM					
6Z-CWS-PMP-01A	20041223-PD-660	Circulating Water Pump A	5,500 HP	94.03.62.150	
6Z-CWS-PMP-01B	20041223-PD-660	Circulating Water Pump B	5,500 HP	94.03.62.150	
6Z-CWS-PMP-01C	20041223-PD-660	Circulating Water Pump C	5,500 HP	94.03.62.150	
6Z-CWS-PMP-02	20041223-PD-660	Auxiliary Circulation Water Pump	500 HP*	94.03.62.150	*Assumed value is 10% of Circulating Water Pump HP.
6Z-CWS-HEX-01	20041223-PD-661	EGR Heat Exchanger	DESIGN FLOW/PRESSURE: 20,359 GPM @ 145 PSI	94.03.52.100	H/X provided by GE, Kiewit to supply cooling water to cold side.
6Z-CWS-HEX-02	20041223-PD-661	EGR Heat Exchanger	DESIGN FLOW/PRESSURE: 20,359 GPM @ 145 PSI	94.03.52.100	H/X provided by GE, Kiewit to supply cooling water to cold side.
6Z-CWS-CTC-01A	20041223-PD-662	Cooling Tower Cell A	142,450 GPM	94.03.52.175	
6Z-CWS-CTC-01B	20041223-PD-662	Cooling Tower Cell B	142,450 GPM	94.03.52.175	
6Z-CWS-CTC-01C	20041223-PD-662	Cooling Tower Cell C	142,450 GPM	94.03.52.175	
6Z-CWS-CTC-01D	20041223-PD-662	Cooling Tower Cell D	142,450 GPM	94.03.52.175	
6Z-CWS-CTC-01E	20041223-PD-662	Cooling Tower Cell E	142,450 GPM	94.03.52.175	
6Z-CWS-FAN-01A	20041223-PD-662	Cooling Tower Fan A	-	94.03.52.175	
6Z-CWS-FAN-01B	20041223-PD-662	Cooling Tower Fan B	-	94.03.52.175	
6Z-CWS-FAN-01C	20041223-PD-662	Cooling Tower Fan C	-	94.03.52.175	
6Z-CWS-FAN-01D	20041223-PD-662	Cooling Tower Fan D	-	94.03.52.175	
6Z-CWS-FAN-01E	20041223-PD-662	Cooling Tower Fan E	-	94.03.52.175	
6Z-CWS-MFN-01A	20041223-PD-662	Cooling Tower Fan A Motor	250 HP	94.03.52.175	
6Z-CWS-MFN-01B	20041223-PD-662	Cooling Tower Fan B Motor	250 HP	94.03.52.175	
6Z-CWS-MFN-01C	20041223-PD-662	Cooling Tower Fan C Motor	250 HP	94.03.52.175	
6Z-CWS-MFN-01D	20041223-PD-662	Cooling Tower Fan D Motor	250 HP	94.03.52.175	
6Z-CWS-MFN-01E	20041223-PD-662	Cooling Tower Fan E Motor	250 HP	94.03.52.175	
6Z-CWS-CTC-01F	20041223-PD-663	Cooling Tower Cell F	142,450 GPM	94.03.52.175	
6Z-CWS-CTC-01G	20041223-PD-663	Cooling Tower Cell G	142,450 GPM	94.03.52.175	
6Z-CWS-CTC-01H	20041223-PD-663	Cooling Tower Cell H	142,450 GPM	94.03.52.175	
6Z-CWS-CTC-01I	20041223-PD-663	Cooling Tower Cell I	142,450 GPM	94.03.52.175	
6Z-CWS-CTC-01J	20041223-PD-663	Cooling Tower Cell J	142,450 GPM	94.03.52.175	
6Z-CWS-FAN-01F	20041223-PD-663	Cooling Tower Fan F	-	94.03.52.175	
6Z-CWS-FAN-01G	20041223-PD-663	Cooling Tower Fan G	-	94.03.52.175	
6Z-CWS-FAN-01H	20041223-PD-663	Cooling Tower Fan H	-	94.03.52.175	
6Z-CWS-FAN-01I	20041223-PD-663	Cooling Tower Fan I	-	94.03.52.175	
6Z-CWS-FAN-01J	20041223-PD-663	Cooling Tower Fan J	-	94.03.52.175	
6Z-CWS-MFN-01F	20041223-PD-663	Cooling Tower Fan F Motor	250 HP	94.03.52.175	
6Z-CWS-MFN-01G	20041223-PD-663	Cooling Tower Fan G Motor	250 HP	94.03.52.175	
6Z-CWS-MFN-01H	20041223-PD-663	Cooling Tower Fan H Motor	250 HP	94.03.52.175	
6Z-CWS-MFN-01I	20041223-PD-663	Cooling Tower Fan I Motor	250 HP	94.03.52.175	
6Z-CWS-MFN-01J	20041223-PD-663	Cooling Tower Fan J Motor	250 HP	94.03.52.175	
FLUE GAS SYSTEM					
6A-FLG-BLW-01A	20041223-PD-680	Unit 6A HRSG Damper Seal Air Blower	50 HP	94.03.300	
6A-FLG-BLW-01B	20041223-PD-680	Unit 6A HRSG Damper Seal Air Blower	50 HP	94.03.300	
6A-FLG-SKD-01	20041223-PD-680	Unit 6A HRSG Tie-In Damper Seal Air Skid	-	94.03.300	
6A-DPR-FLG-180	20041223-PD-680	Unit 6A HRSG Tie-In Damper	Design Flow: 2,452,737 lb/hr, 180" H x 180" W	94.03.300	
6B-FLG-BLW-01A	20041223-PD-680	Unit 6B HRSG Damper Seal Air Blower	50 HP	94.03.300	
6B-FLG-BLW-01B	20041223-PD-680	Unit 6B HRSG Damper Seal Air Blower	50 HP	94.03.300	
6B-FLG-SKD-01	20041223-PD-680	Unit 6B HRSG Tie-In Damper Seal Air Skid	-	94.03.300	
6B-DPR-FLG-280	20041223-PD-680	Unit 6B HRSG Tie-In Damper	Design Flow: 2,452,737 lb/hr, 180" H x 180" W	94.03.300	
6A-FLG-BLW-02A	20041223-PD-681	Unit 6A CC Train Damper Seal Air Blower	50 HP	94.03.300	
6A-FLG-BLW-02B	20041223-PD-681	Unit 6A CC Train Damper Seal Air Blower	50 HP	94.03.300	
6A-FLG-SKD-02	20041223-PD-681	Unit 6A CC Train Tie-In Damper Seal Air Skid	-	94.03.300	
6A-DPR-FLG-190	20041223-PD-681	Unit 6A CC Train Damper	Design Flow: 2,452,737 lb/hr, 180" H x 180" W	94.03.300	
6B-FLG-BLW-02A	20041223-PD-681	Unit 6B CC Train Damper Seal Air Blower	50 HP	94.03.300	
6B-FLG-BLW-02B	20041223-PD-681	Unit 6B CC Train Damper Seal Air Blower	50 HP	94.03.300	
6B-FLG-SKD-02	20041223-PD-681	Unit 6B CC Train Tie-In Damper Seal Air Skid	-	94.03.300	
6B-DPR-FLG-290	20041223-PD-681	Unit 6B CC Train Damper	Design Flow: 2,452,737 lb/hr, 180" H x 180" W	94.03.300	
DEMINERALIZED WATER SYSTEM					
6Z-DWS-PMP-01A	20041223-PD-710	Demineralized Water Forwarding Pump A	15 HP	94.03.62.175	
6Z-DWS-PMP-01B	20041223-PD-710	Demineralized Water Forwarding Pump B	15 HP	94.03.62.175	
6Z-DWS-SKD-01A	20041223-PD-710	Demineralized Water Pump Skid	DESIGN FLOW/PRESSURE: 115 GPM @ 227 FT TDH 2 X 100%	94.03.62.175	
SAMPLING					
6Z-SMP-PNL-01	20041223-PD-730	Sample Panel	-	94.03.34.100	
6Z-SMP-SKD-01	20041223-PD-730	Temperature Control Unit	-	94.03.34.100	
TOWER CHEMICAL FEED					
6Z-TCF-PMP-01A	20041223-PD-750	Cooling Tower Blowdown Sodium Bisulfite Feed Pump A	0.5 HP	94.03.34.125	
6Z-TCF-PMP-01B	20041223-PD-750	Cooling Tower Blowdown Sodium Bisulfite Feed Pump B	0.5 HP	94.03.34.125	
6Z-TCF-SKD-01	20041223-PD-750	Cooling Tower Blowdown Sodium Bisulfite Feed Pump Skid	(L) DESIGN FLOW / PRESSURE 2 X 100%	94.03.34.125	Sizing dependent on water quality and cooling tower characteristics
6Z-TCF-PNL-01	20041223-PD-750	Cooling Tower Blowdown Sodium Bisulfite Feed Pump Skid Panel	-	94.03.34.125	Panel to be supplied by the pump vendor.
6Z-TCF-TNK-01	20041223-PD-750	Cooling Tower Blowdown Sodium Bisulfite Storage Tote	400 GAL	94.03.34.125	
6Z-TCF-PMP-02A	20041223-PD-750	Corrosion Inhibitor Feed Pump A	0.5 HP	94.03.34.125	
6Z-TCF-PMP-02B	20041223-PD-750	Corrosion Inhibitor Feed Pump B	0.5 HP	94.03.34.125	
6Z-TCF-SKD-02	20041223-PD-750	Corrosion Inhibitor Feed Pump Skid	(L) DESIGN FLOW / PRESSURE 2 X 100%	94.03.34.125	Sizing dependent on water quality and cooling tower characteristics
6Z-TCF-PNL-02	20041223-PD-750	Corrosion Inhibitor Feed Pump Skid Panel	-	94.03.34.125	Panel to be supplied by the pump vendor.
6Z-TCF-TNK-02	20041223-PD-750	Corrosion Inhibitor Storage Tote	400 GAL	94.03.34.125	
6Z-TCF-TNK-03	20041223-PD-751	Sulfuric Acid Tank	4,000 GAL	94.03.34.125	

Page 1 of 2

GE/SOUTHERN/LINDE ADVANCED NGCC INTEGRATION EQUIPMENT LIST

Rev. / Date: Rev. 0 - 4/14/23
CKD / Date: 4/14/23

6Z-TCF-PMP-03A	20041223-PD-751	Sulfuric Acid Feed Pump A	0.5 HP	94.03.34.125	
6Z-TCF-PMP-03B	20041223-PD-751	Sulfuric Acid Feed Pump B	0.5 HP	94.03.34.125	
6Z-TCF-SKD-03	20041223-PD-751	Sulfuric Acid Feed Pump Skid	DESIGN FLOW/PRESSURE: (L) 2 X 100%	94.03.34.125	*Sizing dependent on water quality and cooling tower characteristics*
6Z-TCF-PNL-03	20041223-PD-751	Sulfuric Acid Feed Pump Skid Control Panel	-	94.03.34.125	*Panel to be supplied by the pump vendor.*
6Z-TCF-TNK-04	20041223-PD-751	Sodium Hypochlorite Tank	2,000 GAL	94.03.34.125	
6Z-TCF-PMP-04A	20041223-PD-751	Sodium Hypochlorite Feed Pump A	0.5 HP	94.03.34.125	
6Z-TCF-PMP-04B	20041223-PD-751	Sodium Hypochlorite Feed Pump B	0.5 HP	94.03.34.125	
6Z-TCF-SKD-04	20041223-PD-751	Sodium Hypochlorite Feed Pump Skid	DESIGN FLOW/PRESSURE: (L) 2 X 100%	94.03.34.125	*Sizing dependent on water quality and cooling tower characteristics*
6Z-TCF-PNL-04	20041223-PD-751	Sodium Hypochlorite Feed Pump Skid Control Panel	-	94.03.34.125	*Panel to be supplied by the pump vendor.*
6Z-TCF-PMP-06A	20041223-PD-751	Cooling Tower Chem Feed Sump Pump A	1	94.03.34.125	
6Z-TCF-PMP-06B	20041223-PD-751	Cooling Tower Chem Feed Sump Pump B	1	94.03.34.125	
6Z-TCF-PMP-05A	20041223-PD-752	Scale Inhibitor Feed Pump A	0.5 HP	94.03.34.125	
6Z-TCF-PMP-05B	20041223-PD-752	Scale Inhibitor Feed Pump B	0.5 HP	94.03.34.125	
6Z-TCF-SKD-05	20041223-PD-752	Scale Inhibitor Feed Pump Skid	DESIGN FLOW/PRESSURE: (L) 2 X 100%	94.03.34.125	*Sizing dependent on water quality and cooling tower characteristics*
6Z-TCF-PNL-05	20041223-PD-752	Scale Inhibitor Feed Pump Skid Control Panel	-	94.03.34.125	*Panel to be supplied by the pump vendor.*
6Z-TCF-TNK-05	20041223-PD-752	Scale Inhibitor Storage Tote	-	94.03.34.125	
		SERVICE WATER			
6Z-SWS-PMP-01A	20041223-PD-800	Service Water Pump	150 HP	94.03.62.175	
6Z-SWS-PMP-01B	20041223-PD-800	Service Water Pump	150 HP	94.03.62.175	
		POTABLE WATER			
6Z-PWS-PMP-01A	20041223-PD-810	Potable Water Pump A	1 HP	94.03.62.175	
6Z-PWS-PMP-01B	20041223-PD-810	Potable Water Pump B	1 HP	94.03.62.175	
6Z-PWS-SKD-01	20041223-PD-810	Potable Water Tempering Skid	DESIGN FLOW/PRESSURE: 48.3 GPM @ 4.07 FT TDH 2 X 100%	94.03.62.175	
		INSTRUMENT AIR			
6Z-IA-CMP-01	20041223-PD-820	Air Compressor	DESIGN FLOW/PRESSURE: 351 SCFM @ 120 PSI	94.03.38.100	
6Z-IA-CMP-02	20041223-PD-820	Air Compressor	DESIGN FLOW/PRESSURE: 351 SCFM @ 120 PSI	94.03.38.100	
6Z-IA-REC-01	20041223-PD-820	Wet Air Reciever	DESIGN VOLUME/PRESSURE: 180 GAL @120 PSI	94.03.38.100	
6Z-IA-ADY-01	20041223-PD-821	Air Dryer	MAX SYSTEM DESIGN FLOW: 351 SCFM @ 120 PSI	94.03.38.100	
6Z-IA-ADY-02	20041223-PD-821	Air Dryer	MAX SYSTEM DESIGN FLOW: 351 SCFM @ 120 PSI	94.03.38.100	
6Z-IA-REC-02	20041223-PD-821	Dry Air Receiver	DESIGN VOLUME/PRESSURE: 180 GAL @ 120 PSI	94.03.38.100	
6Z-IA-TNK-01	20041223-PD-822	Compressed Air Storage Tank	DESIGN VOLUME/PRESSURE: 50 GAL* @ 120 PSI	94.03.38.100	**Assumed volume, actual volume to be determined by 6Z-PCV-LPS009 equipment vendor*
		WASTE WATER			
6Z-WW-PMP-01A	20041223-PD-911	Waste Water Sump Pump	2 HP	94.03.62.175	
6Z-WW-PMP-01B	20041223-PD-911	Waste Water Sump Pump	2 HP	94.03.62.175	
6Z-WW-PNL-01	20041223-PD-911	Waste Water Sump Control Panel	-	94.03.62.175	*Panel to be supplied by the pump vendor.*
		PLANT DRAINS			
6Z-PDR-PMP-01A	20041223-PD-921	SE Oil/Water Separator Pump A	(L) HP	94.03.66.175	*HP to be determined after plant drain routing and amine collection review.*
6Z-PDR-PMP-01B	20041223-PD-921	SE Oil/Water Separator Pump B	(L) HP	94.03.66.175	*HP to be determined after plant drain routing and amine collection review.*
6Z-PDR-SKD-01	20041223-PD-921	Southeast Oil/Water Separator	DESIGN VOLUME: 12,000 GAL*	94.03.66.175	**Assumed volume, actual volume to be determined after plant drain routing and amine collection review.*
6Z-PDR-PNL-01	20041223-PD-921	Southeast Oil/Water Separator Pump Control Panel	-	94.03.66.175	*Panel to be supplied by the pump vendor.*
6Z-PDR-PMP-02A	20041223-PD-921	NW Oil/Water Separator Pump A	(L) HP	94.03.66.175	*HP to be determined after plant drain routing and amine collection review.*
6Z-PDR-PMP-02B	20041223-PD-921	NW Oil/Water Separator Pump B	(L) HP	94.03.66.175	*HP to be determined after plant drain routing and amine collection review.*
6Z-PDR-SKD-02	20041223-PD-921	Northwest Oil/Water Separator	DESIGN VOLUME: 12,000 GAL*	94.03.66.175	**Assumed volume, actual volume to be determined after plant drain routing and amine collection review.*
6Z-PDR-PNL-02	20041223-PD-921	Northwest Oil/Water Separator Pump Control Panel	-	94.03.66.175	*Panel to be supplied by the pump vendor.*

Page 2 of 2

Electrical Equipment List - IFF

Equipment Tag	Equipment Description	Equipment Type	Rating/Size	Specification Package	Area
6Z-MPT-XFR-1	Main Power Transformer	Transformer	43/58/72 MVA, ONAN/ONAF/ONAF, Z=10.5% @ 43MVA	94.03.20.100	Substation
6Z-MVA-SWG-1	13.8kV Metal Clad Switchgear 1	Switchgear	13.8kV, 3000A, 50kAIC	94.03.08.100	BOP Enclosure
6Z-MVA-SWG-2	13.8kV Metal Clad Switchgear 2	Switchgear	13.8kV, 1200A, 50kAIC	94.03.08.100	EGR Enclosure
6Z-SUS-XFR-11	Secondary Unit Substation Transformer 11	Transformer	13.8kV:4.16kV, 7/8.5MVA, ONAN/ONAF, Z=6.5% @ 7MVA	94.03.20.150	BOP Enclosure
6Z-SUS-XFR-12	Secondary Unit Substation Transformer 12	Transformer	13.8kV:480V, 2.5/3.33MVA, ANAN/ANAF, Z=5.75% @ 2.5MVA	94.03.20.150	BOP Enclosure
6Z-SUS-XFR-21	Secondary Unit Substation Transformer 21	Transformer	13.8kV:4.16kV, 7/8.5MVA, ONAN/ONAF, Z=6.5% @ 7MVA	94.03.20.150	EGR Enclosure
6Z-SUS-XFR-22	Secondary Unit Substation Transformer 22	Transformer	13.8kV:480V, 2.5/3.33MVA, ANAN/ANAF, Z=5.75% @ 2.5MVA	94.03.20.150	EGR Enclosure
6Z-MVC-SWG-11	4.16kV Switchgear 11	Switchgear	4.16kV, 1200A, 25kAIC	94.03.08.100	BOP Enclosure
6Z-MVC-MCC-11	4.16kV Motor Control Center 11	Motor Control Center	4.16kV, 1200A, 25kAIC	94.03.08.100	BOP Enclosure
6Z-MVC-SWG-21	4.16kV Switchgear 21	Switchgear	4.16kV, 1200A, 25kAIC	94.03.08.100	EGR Enclosure
6Z-LVB-SWG-12	480V Switchgear 12	Switchgear	480V, 4000A, 65kAIC	94.03.08.100	BOP Enclosure
6Z-LVB-SWG-22	480V Switchgear 22	Switchgear	480V, 4000A, 65kAIC	94.03.08.100	EGR Enclosure
6Z-LVB-MCC-121	480V Motor Control Center 121	Motor Control Center	480V, 1600A, 65kAIC	94.03.08.100	BOP Enclosure
6Z-LVB-MCC-122	480V Motor Control Center 122	Motor Control Center	480V, 1600A, 65kAIC	94.03.08.100	BOP Enclosure
6Z-LVB-MCC-123	480V Motor Control Center 123	Motor Control Center	480V, 1600A, 65kAIC	94.03.08.100	BOP Enclosure
6Z-LVB-MCC-221	480V Motor Control Center 221	Motor Control Center	480V, 1600A, 65kAIC	94.03.08.100	EGR Enclosure
6Z-LVB-MCC-222	480V Motor Control Center 222	Motor Control Center	480V, 1600A, 65kAIC	94.03.08.100	EGR Enclosure
6Z-MVA-BUS-1	13.8kV Cable Bus 1	Cable Bus	13.8kV, 3000A	94.03.12.150	BOP Enclosure
6Z-LVB-BUS-12	480V Cable Bus 12	Cable Bus	480V, 4000A	94.03.12.150	BOP Enclosure
6Z-LVB-BUS-22	480V Cable Bus 22	Cable Bus	480V, 4000A	94.03.12.150	EGR Enclosure
6Z-LVE-CHG-1	125VDC Battery Charger 1	Battery Charger	480VAC:125VDC	94.03.06.100	BOP Enclosure
6Z-LVE-CHG-2	125VDC Battery Charger 2	Battery Charger	480VAC:125VDC	94.03.06.100	BOP Enclosure
6Z-LVE-BAT-1	125VDC Battery	Battery	125VDC, 830 Ah, 2 hours	94.03.06.100	BOP Enclosure
6Z-LVE-DSW-1	125VDC Battery Disconnect Switch	Disconnect Switch	125VDC, 600A	94.03.06.100	BOP Enclosure
6Z-LVE-PPL-1	125VDC Main Panel	Power Panel	125VDC, 600A, 22kAIC		BOP Enclosure
6Z-LVE-PPL-11	125VDC Admin Building Panel	Power Panel	125VDC, 100A, 22kAIC		BOP Enclosure
6Z-LVE-PPL-12	125VDC Substation Panel	Power Panel	125VDC, 100A, 22kAIC		Substation
6Z-LVE-PPL-13	125VDC EGR Enclosure Panel	Power Panel	125VDC, 100A, 22kAIC		EGR Enclosure
6Z-LVF-UPS-1	120VAC Uninterruptible Power Supply	UPS	125VDC: 120VAC, 30kVA	94.03.06.125	BOP Enclosure
6Z-LVF-XFR-1	UPS Bypass Transformer	Transformer	480VAC: 120VAC, 30kVA	94.03.06.125	BOP Enclosure
6Z-LVF-PPL-1	120VAC UPS Panel	Power Panel	120VAC, 400A, 22kAIC		BOP Enclosure
6Z-LVF-PPL-11	120VAC UPS Admin Building Panel	Power Panel	120VAC, 150A, 22kAIC		BOP Enclosure
6Z-LVF-PPL-12	120VAC UPS Substation Panel	Power Panel	120VAC, 100A, 22kAIC		Substation
6Z-LVF-PPL-13	120VAC EGR Encosure Panel	Power Panel	120VAC, 100A, 22kAIC		EGR Enclosure
6Z-DCS-CAB-1	OSBL DCS Cabinet 1 (IO)	DCS Cabinet		94.03.18.100	BOP Enclosure
6Z-DCS-CAB-2	OSBL DCS Cabinet 2 (Controller)	DCS Cabinet		94.03.18.100	BOP Enclosure
6Z-DCS-CAB-3	DCS Remote IO Cabinet (Cooling Tower)	DCS Cabinet		94.03.18.100	Field
6Z-DCS-CAB-4	DCS Remote IO Cabinet (EGR)	DCS Cabinet		94.03.18.100	EGR Enclosure
6Z-DCS-CAB-5	ISBL DCS Cabinet 1 (IO)	DCS Cabinet		94.03.18.100	ISBL Enclosure
6Z-DCS-CAB-6	ISBL DCS Cabinet 2 (Controller)	DCS Cabinet		94.03.18.100	ISBL Enclosure
6Z-DCS-CAB-7	DCS Server Cabinet A	DCS Cabinet		94.03.18.100	Admin Building
6Z-DCS-CAB-8	DCS Server Cabinet B	DCS Cabinet		94.03.18.100	Admin Building
6Z-NET-CAB-1	OSBL Network Cabinet	Network Cabinet		94.03.18.100	BOP Enclosure
6Z-NET-CAB-2	ISBL Network Cabinet	Network Cabinet		94.03.18.100	ISBL Enclosure
6Z-NET-CAB-3	Admin Building Network Cabinet	Network Cabinet		94.03.18.100	Admin Building
6Z-HTT-PPL-01	Heat Trace Panel 1	Heat Trace Panel	208/120V, 150A		BOP Enclosure
6Z-HTT-PPL-02	Heat Trace Panel 2	Heat Trace Panel	208/120V, 150A		Field
6Z-HTT-PPL-03	Heat Trace Panel 3	Heat Trace Panel	208/120V, 150A		Field
6Z-HTT-PPL-04	Heat Trace Panel 4	Heat Trace Panel	208/120V, 150A		Field
6Z-LVB-PPL-1233	Admin Building 480V Panel	Power Panel	480V, 100A		Admin Building
6Z-LVB-PPL-1234	Substation 480V Panel	Power Panel	480V, 100A		Substation
6Z-LVB-PPL-1231	BOP Enclosure 480V Panel	Power Panel	480V, 100A		BOP Enclosure
6Z-LVD-PPL-1232	BOP Enclosure 208/120V Panel	Power Panel	208/120V, 150A		BOP Enclosure
6Z-LVD-PPL-2211	EGR Enclosure 240/120V Panel	Power Panel	240/120V, 150A		EGR Enclosure

GE/Southern/Linde Advanced NGCC Integration
Kiewit Project No. 20041223

0/Issued for FEED

EGR Equipment List

Note that the following EGR equipment list is per GT train, so total of 2x the quantities shown below.

KKS CODE	NAME	MLI	QTY	EST WEIGHT	SIZE
	Gas Turbine				
	GT Air Intake		1		
	INLET PLENUM SS	1612			
	AIR INTAKE HORIZONTAL INLET DUCT FOR SS	A040			
	AIR INTAKE SYSTEM STATIC FILTER FOR SS	A41EGR			
	INLET PLENUM SS	A041			
	INLET TRANSITION DUCT				
	Instrumentation	misc			
	Power Island Mechanical				
	HRSG exhaust gas analysis system		1		
MBR02AA001	EGR INLET DAMPER		1		14'-0" x 14'-0"
MBR03AP002	SOLIDS BLOWDOWN PUMP		2	740 lb	8x10-15
MBR02AN001	EGR BLOWER FAN		1	58000 lb	
	EGR BLOWER VFD				
MBR02AA002	EGR BLOWER OUTLET DAMPER		1		
LAW02	EGR BLOWER SEAL AIR SKID			4000 lb	
MBR01AC001	EGR DCC COOLER		1		
	COLLECTION TANK		1		
	OVERFLOW TANK		1		
	EGR DCC Cooling Water Circulation Pump skid				
MBR03AP001	EGR COOLING WATER CENTRIFUGAL PUMP		3	5795 lb	102 x 27 x 56 in
	EGR DCC Cooling water piping and valves		1		
	EGR DCC Cooling Water sampling system				
MBR03C002	EGR DCC CW HEX		2	15120 lb	122 x 36 x 105 in
	PURGE STACK DUCT		1		
MBR02AA003	EGR OUTLET DAMPER		1		12'-3" x 12'-3"
	EGR INTERCONNECT DUCT		1		
	EGR INTERCONNECT DUCT - EXPANSION JOINTS		1		
	EGR INLET MIXER TRANSITION DUCT				
LAW03AA005	PURGE STACK DAMPER		1		3'- 9 ½" x 3'- 9 ½"
	Exhaust gas monitoring system	misc	1		
MBR02CF001	Exhaust gas flowmeter	0637	1		
	HRSG conventional build				
HNE01QM501	Stack Damper		1	12,000 lb	16'-10" Dia
MBR01AA002	Carbon capture tandem louver damper		1	26,000 lb	22'-2" x 22'-2"
MBR01AA001	Carbon capture/EGR isolation damper		1	15,000 lb	16'-0" x 18'-3"
LAW01	Combined seal air skid		1	10,000 lb	

Capital Cost Estimate

NETL DEFINITIONS

This assessment and report uses the DOE/NETL definitions available in their reports 'Cost and Performance Baseline for Fossil Energy Plants Volume 1: Bituminous Coal and Natural Cas to Electricity' report dated September 24, 2019 and 'Cost Estimation Methodology for NETL Assessments of Power Plant Performance' report dated February 2021. See Figures 1 thru 5.

The Bare Erected Cost (BEC) comprises the cost of process equipment, on-site facilities and infrastructure that support the plant (e.g., shops, offices, labs, road), and the direct and indirect labor required for its construction and/or installation. The cost of EPC services and contingencies are not included in BEC.

The Engineering, Procurement and Construction Cost (EPCC) comprises the BEC plus the cost of services provided by the EPC contractor. EPC services include: detailed design, contractor permitting (i.e., those permits that individual contractors must obtain to perform their scopes of work, as opposed to project permitting, which is not included here), and project/construction management costs.

The Total Plant Cost (TPC) comprises the EPCC plus project and process contingencies.

The Total Overnight Cost (TOC) comprises the TPC plus all other overnight costs, including owner's costs. TOC does not include escalation during construction or interest during construction.

The Total As-Spent Cost (TASC) is the sum of all capital expenditures as they are incurred during the capital expenditure period including their escalation. TASC also includes interest during construction, comprising interest on debt and a return on equity.

Figure 1: Definitions for CapEx from page 45 of NETL 'Cost and Performance Baseline for Fossil Energy Plants Volume 1: Bituminous Coal and Natural Cas to Electricity' report dated September 24, 2019'

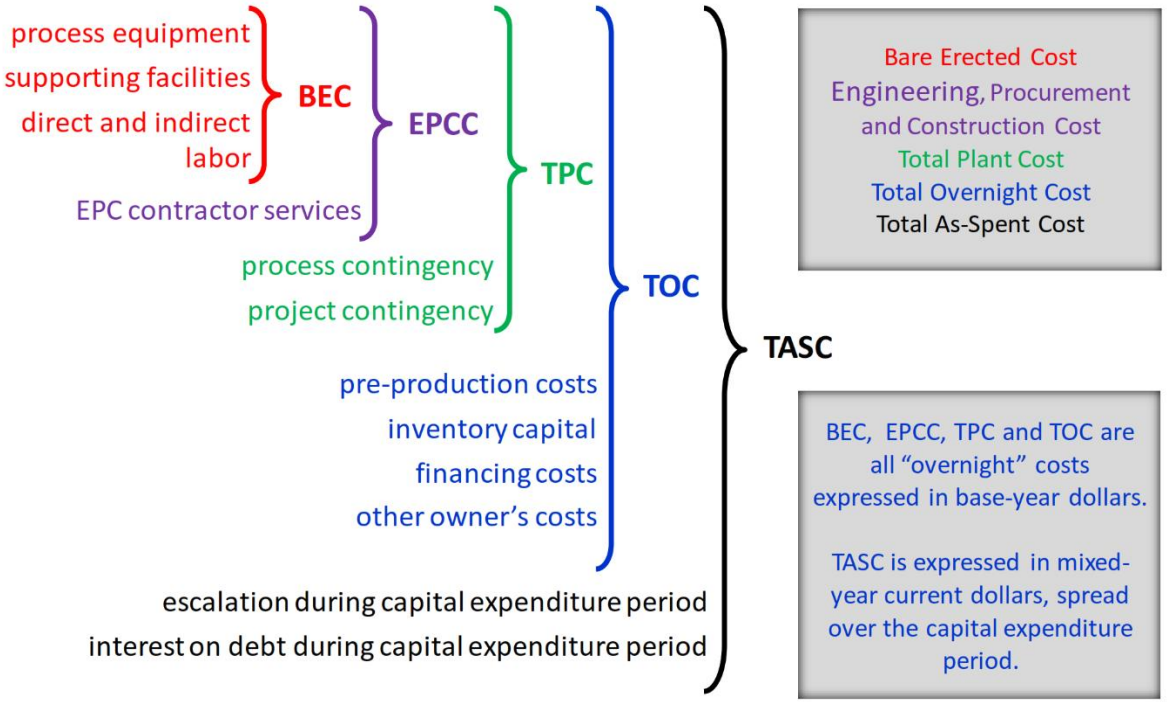

Figure 2: Capital Cost Levels and their Elements from page 10 of NETL 'Cost Estimation Methodology for NETL Assessments of Power Plant Performance' report dated February 2021

$$COE = \frac{\text{first year capital charge} + \text{first year fixed operating costs} + \text{first year variable operating costs}}{\text{annual net megawatt hours of power generated}}$$

$$COE = \frac{(FCR)(TASC) + OC_{FIX} + (CF)(OC_{VAR})}{(CF)(MWH)}$$

Figure 3: Calculation for Cost of Electricity from page 19 of NETL 'Cost Estimation Methodology for NETL Assessments of Power Plant Performance' report dated February 2021 (GE has used 0.0707 for FCR)

The breakeven CO_2 sales price represents the minimum CO_2 plant gate sales price that will incentivize carbon capture relative to a defined reference non-capture plant. The breakeven CO_2 sales price is calculated using the following formula:

$$Breakeven\ CO_2\ Sales\ Price\ (\frac{\$}{tonne}) = \frac{(LCOE_{CCS} - LCOE_{Non\ CCS})}{CO_2\ Captured}$$

Figure 4: Calculation for Breakeven CO2 Sales Price from page 52 of NETL 'Cost and Performance Baseline for Fossil Energy Plants Volume 1: Bituminous Coal and Natural Cas to Electricity' report dated September 24, 2019'

CapEx Total Plant Cost (TPC) includes:	**OpEx includes:**

• Process Equipment / Supporting Facilities / Direct & Indirect Labor for:
  ○ Feedwater & Misc. BOP Systems
  ○ CO2 Removal and Compression (inc. modifications to HRSG stacks)
  ○ Cooling System (water)
  ○ Accessory Electric Plant
  ○ Instrumentation & Controls
  ○ Improvements to Site
  ○ Buildings & Structures
  ○ IF APPLICABLE: EGR, aux boiler, non-condensing steam turbine, steam turbine modifications inc. butterfly valve
• EPC Contractor Services
• Process Contingencies
• Project Contingencies
	• Total Fixed Operating Costs
	• Maintenance Material Cost (100% Capacity Factor)
	• Consumables (100% Capacity Factor)

Figure 5: Summary of CapEx and OpEx components from NETL 'Cost and Performance Baseline for Fossil Energy Plants Volume 1: Bituminous Coal and Natural Cas to Electricity' report dated September 24, 2019'

CAPITAL COST OF BASE NGCC

The capital cost of the base NGCC must be estimated for use in the calculation of the LCOE in the TEA.

The following are the Capital Cost Estimates for the current NGCC (prior to modifications for or the addition of CCS). This is not the actual cost from 2001 for the construction of the Barry site, but is based on the projected cost of building a similar sized plant in December 2018.

Plant Size:	**551.869 MW**	
	Dec 2018$	**Nov 2023$**
Total Project Cost	**$432.0MM ($783/kW TPC)**	**$574.5MM ($1041/kW TPC)**
Total Overnight Cost	**$525.0MM ($951/kW TOC)**	**$698.3MM ($1265/kW TOC)**
Total As-Spent Cost	**$572.3MM ($1037/kW TASC)**	**$761.1MM ($1379/kW TASC)**

CAPITAL COST ESTIMATING PROCESS

The provided costs are based on the quantities developed throughout the FEED study by Kiewit, GE, and Linde. Quantities The provided costs are based on the quantities developed throughout the FEED study by Kiewit, GE, and Linde. Quantities include anything requiring installation or startup for the project as part of Kiewit Scope such as equipment, modules, steel, piping, foundations, instruments, and/or cable. Kiewit solicited vendor bids for select equipment. The remaining equipment costs were based on Kiewit's historical information. A summary of equipment and subcontract cost basis is below.

Kiewit applied unit rates to each quantity to calculate the required man-hours for that activity. Unit rates for each type of quantity bucket were developed using Kiewit's historically achieved rates. Similar scope activities from Kiewit projects with considerations of geographical area and labor type are all considered when developing the project specific labor productivity rates for each quantity bucket.

A wage rate is then applied to calculate the labor costs. Labor wages used in this estimate are union rates. The wages were checked and compared with prevailing wages to confirm they meet the current prevailing wages in the area for the applicable levels. These labor wages were then used along with the quantities and unit rates to determine the total installation and construction costs.

Bulk materials (structural steel, piping, cement, cable, etc.) are a composite of historical and "market basket" prices from vendor quotes that are periodically updated for estimate purposes.

Startup Costs are estimated by factoring from historical projects.

Indirect costs are determined from reviewing historical project information (by region, total craft manhours, total project duration, permanent material and equipment costs, and escalation during project duration). All historical costs used were escalated to current dollars.

Summary of Cost Basis for Engineered Equipment and Subcontracts

Description	Historical Pricing or Vendor Quote
Steam Turbine Modifications	Recent similar-to detailed Quotes
Gas Turbine Modifications	Current Pricing levels from GE database
HRSG modifications for GT mods	Recent similar-to detailed as built costs
Structured Packing Installation Subcontract	Historical Pricing
Flue Gas Dampers	Budgetary Vendor Quote
Ductwork	Budgetary Vendor Quote
Fire Protection Subcontract	Historical Pricing
Cooling Tower Subcontract	Budgetary Vendor Quote
Circulating Water Pumps	Budgetary Vendor Quote
General Service Pumps	Budgetary Vendor Quote
Cooling Tower Chemical Feed Equipment/Tanks	Historical Pricing
Instrument Air Compressor & Dryer	Historical Pricing
Instrument Air Receivers	Historical Pricing
Potable Water Tempering Skid	Historical Pricing
LP Steam Non-Return Valves & Gate Valves	Historical Pricing
Oil Water Separator	Historical Pricing
Main Power Transformers	Budgetary Vendor Quote (Email)
SUS Transformers	Historical Pricing
Electrical Enclosures	Budgetary Vendor Quote (Email)
UPS System	Historical Pricing
Substation (Breakers, Enclosure, Outdoor Eq.)	Historical Pricing
DCS	Historical Pricing
Instrumentation	Historical Pricing
Cable Bus	Historical Pricing
Construction Subcontracts (Piling etc)	Historical Pricing

Summary of Cost Development Division of Responsibility

	Design	Material Take-Offs	Material Supply Costs	Installation Costs
Base NGCC Modifications	GE	GE	GE	GE
Gas Turbine Modifications	GE	GE	GE	GE
EGR Area				
Duct	GE	GE	GE	Kiewit
Duct Support Steel	Kiewit	Kiewit	Kiewit	Kiewit
Mechanical Equipment	GE	GE	GE	Kiewit
Piping, Valves, Specialties	GE	GE	Kiewit	Kiewit
CT Inlet Filter House Modifications	GE	GE	GE	GE
Wire & Cable	Kiewit	Kiewit	Kiewit	Kiewit
Foundations	Kiewit	Kiewit	Kiewit	Kiewit
ISBL				
Duct	Linde	Kiewit	Kiewit	Kiewit
Support Steel	Linde	Linde	Kiewit	Kiewit
Mechanical Equipment	Linde	Linde	Linde	Kiewit
Piping, Valves, Specialties, Supports	Linde	Linde	Linde	Kiewit
Electrical Eq. PDC, Transformers	Linde	Linde	Linde	Kiewit
Wire & Cable	Linde	Linde	Linde	Kiewit
Foundations	Kiewit	Kiewit	Kiewit	Kiewit
OSBL				
All Equipment and Materials	Kiewit	Kiewit	Kiewit	Kiewit
Admin Building	Kiewit	Kiewit	Kiewit	Kiewit
PDCs & Substation, Main Power Transformer	Kiewit	Kiewit	Kiewit	Kiewit
Mechanical Equipment	Kiewit	Kiewit	Kiewit	Kiewit
Piping, Valves, Specialties, Supports	Kiewit	Kiewit	Kiewit	Kiewit
Duct from EGR(GE) to ISBL (Linde)	Kiewit	Kiewit	Kiewit	Kiewit

CAPITAL COST BASIS ASSUMPTIONS

Owner Responsibilities – The Owner shall be responsible for the following activities:

1. Owner furnished equipment (OFE) includes:
   a. All OFE is assumed to be fully shop assembled to the maximum extent possible. Estimate assumes all auxiliary systems come skidded to the maximum extent possible.
   b. All OFE will be provided in new and unused (clean) condition.
   c. TFA time for OFE will be sufficient for both construction support and start-up & performance testing.
   d. DDP Freight to the jobsite for heavy haul loads and all other materials.
   e. Engineering deliverables and equipment delivery for OFE in time to support the project schedule and sequence.
   f. Training, insurance, off-site storage (if necessary), etc. for all OFE. Contractor has included costs for temporary storage of structured packing (supplied by Linde).
   g. Start-up and operating spares for all OFE.
   h. Tie in from the 230kV Connection to the Main Power Transformer. Inclusive of cable, terminations, conduit, etc.
2. Engineering deliverables and data for Owner responsibilities (i.e. tie-in information etc.) in time to support the project schedule.
3. Ownership of the Site. The site is assumed to be of sufficient size to include the facility as well as laydown, Contractor's offices, and parking. The estimate does not include any costs associated with offsite laydown rental and material handling or offsite parking
4. All operating permits and other permits as required to begin construction and work on permanent structures.
5. Payment of the building permit, grading permit, plan review, habitat mitigation, city contributions, and other similar fees/funds.
6. Coordination and payment for all biologists, anthropologists, site specialists, etc.
7. Coordination and payment for all Owner's engineers, banks engineers, or others required for Owner's development purposes.
8. Coordination and payment for all utility related system studies.
9. Start-up and commissioning fuels, back-feed power, gases, temp construction power and all water associated with construction, start-up, and commissioning activities.
10. Coordination and supply of site utilities and interconnection to a location within 100 ft from the power block, and all construction-related utilities (power, water, sanitary sewage, etc.).
11. Off-site work such as repair of roads, bridges, rail unloading facilities, and gas and water pipelines.
12. Facility landscaping and irrigation.
13. Shop and lab equipment, furniture, computers and special equipment/tools.
14. First fills and subsequent usage of all chemicals, ammonia, bulk gases, and reagents.
15. Two (2) Operating Personnel to assist the Contractor's startup staff for duration of startup.
16. Permanent power supply to Main Power Transformer.

Contractor Responsibilities – The Contractor shall serve as the prime contractor and shall be responsible for the OSBL engineering, procurement, and construction of the facility as per the project Division of Responsibility. The Contractor shall be responsible for the following activities:

1. All construction related permits such as:
   a. Business and professional licenses, registrations and authorizations;
   b. Permits, certificates and approvals required for disposal of construction wastes;
   c. Permits and licenses required for transportation of Contractor furnished materials and equipment.

2. Detailed engineering of the facility as per the Division of Responsibility.
3. Procurement of the Contractor-furnished engineered equipment per the Kiewit equipment list.
4. Construction of the facility.
5. Start-up and commissioning of the facility.

Clarifications and Assumptions – The following list of assumptions and clarifications form the basis of the engineering estimate:

General

1. Estimate Basis: Indicative price with Firm Price to be developed at a later date and subject to agreement on commercial terms.
2. Union Labor Basis
3. EPC Construction Delivery Method
4. Currency Basis US$
5. Risk money for Contractor's EPC risks including liquidated damage rates, subcaps, caps, limit of liability, etc. has been included. The values and levels offered for these commercial limitations are based on current market conditions.
6. Builder's Risk Insurance, Payment and Performance Bonds, and Sales, Property and/or Provincial Taxes have not been included. A Parent Guarantee with a stepped Letter of Credit for a value up to 5% of the full final contract price has been included in lieu of retention.
7. Specific noise mitigation measures to achieve a far-field noise guarantee have not been included. The plant noise level is based on most equipment specified at 85 dBA at 3ft for near-field noise. Where equipment noise levels exceed 85 dBA, OSHA signage shall be posted.
8. The estimate does not include the remediation of asbestos, lead-based paint, or removal and mitigation of any contaminated soils or hazardous material.
9. EPC provided engineered equipment pricing is based on Contractor's choice of suppliers.
10. Proposal is based on equipment supplied being "manufacturer's standard".
11. Complete and accurate "as-built" drawings for the site will be available to Contractor for design prior to LNTP.
12. Kiewit's corporate blanket engineering E&O insurance coverage is included in the estimate. Additional coverages or a separate policy is not included.
13. The Facility is not considered to be "essential service," and will not be required to remain in operation or have immediate start-up capabilities in the event of a natural disaster such as earthquake, hurricane or flood.
14. Contractor will have full and unlimited site access at all times during the performance of the Scope of Work. This proposal does not include land rental for staging OFE, these items are to be brought to the site for an on-time delivery.
15. Plant design is based on Kiewit standards which are typical for Independent Power Producer's (IPP) projects.
16. Project shall be executed utilizing Kiewit's standards for document transmittal, scheduling, monthly reporting, etc.
17. All interfaces to existing facilities will be per the Kiewit Terminal Point List and based on the Owner drawings provided. Where no drawing was provided of the existing facility piping Kiewit has assumed double block and bleed isolation is available.
18. Warranty is assumed to be 12 months from Substantial Completion with an additional 12 months on any repairs. Overall duration of the warranty period shall not exceed 24 months from Substantial Completion.
19. Any EGR modifications to the Steam Turbine, Combustion Turbine, Combustion Turbine Air Intake, and HRSG gas path are by Others including supply of materials and installation. This

includes any new or modified support steel or foundations required for the Combustion Turbine Air Intake.

Budget Items

Escalation

The escalation necessary to complete the work over the project duration is included; however, no escalation is included to move the NTP date to some point further in the future. No cost or escalation for OFE has been included in the estimate.

Civil

1. The site (including laydown, parking, etc.) is relatively flat. All underground obstructions are identified and located by the existing facility drawings and 3D model provided to Kiewit for use developing this estimate. The site is also free of artifacts, endangered species, restricted areas, voids, or other unusual site conditions. The estimate assumes no encroachment on site wetlands (if they exist), and there are no provisions included for any work within designated wetland areas.
2. The estimate includes cost for developing a 40-acre laydown, the area of which will be designated and provided by the owner.
3. No costs have been included for blasting or excavation of bedrock. Based on our review of the provided geotechnical information for the existing facility, it is assumed that bedrock is at a depth such that it will not be encountered during construction.
4. The estimate assumes structured dewatering during construction will be required. A point well system for dewatering is included and assumes a water discharge location to be defined by owner within a reasonable distance from area of dewatering.
5. All required roads and equipment access/maintenance areas are to be asphalt, surfacing of other areas within the Power Block limits shall be graveled.
6. Storm water is assumed to be sheet flow to sumps and inlets which will discharge to existing drainage ditches on site. No stormwater detention is included in pricing. No bioswales, stormceptor units or similar BMPs are included. No lift station or similar pumping for stormwater is included.
7. Owner shall be responsible for testing and disposal of any contaminated spoils encountered on site. All existing site soils are assumed to be non-contaminated.
8. Contractor has included cost for demolition of 30’ x 20’ storm vault structure as well as 210’ of storm drainpipe.
9. Contractor is not responsible for removal and/or excavation/re-compaction of undocumented fills encountered on site.
10. FEMA, USACE, and other civil permits that may be required shall be the responsibility of the Owner
11. No Traffic signals have been included.
12. Right of Entry / Landowner coordination shall be the responsibility of the Owner.
13. Laydown areas will be left in a stoned condition at conclusion of construction. No costs have been included to reclaim/restore laydown areas or dispose of laydown stone/geofabric materials.

Structural

1. The estimate does not include costs for the Contractor to perform a Geotechnical Investigation of the proposed site to confirm the present assumptions of the site subsurface conditions. This investigation is assumed to be completed by the Owner and provided to Contractor prior to LNTP.

2. Deep foundations are included, however assumptions will need to be validated with an updated geotechnical investigation. Shallow foundations are assumed to be suitable for lightly loaded foundations.
3. The estimate assumes a concrete batch plant is located reasonably close and no additional cost has been included to account for extended travel time to site.
4. An administrative building and compressor canopies have been included, but no other buildings are assumed to be necessary.
5. Any required buildings may be pre-engineered metal buildings. Packaged enclosures may be provided in lieu of pre-engineered metal buildings for ancillary and electrical buildings and enclosures.
6. Fireproofing of structural steel is not included in the estimate.
7. All support steel, maintenance/access platforming, and auxiliary equipment required for the OFE packages shall be included by the OFE and is included within the provided quantities.
8. Structural steel shall utilize galvanized or inorganic zinc prime coated structural steel members.
9. No concrete coatings have been included.
10. Kiewit design and Kiewit developed quantities assume access requirements will be per Kiewit standard where Kiewit design.
11. Incomplete ISBL loading information was provided to Kiewit for foundation design. ISBL foundation design and quantities are dependent on Kiewit assumptions.
12. EGR duct support steel structure is based on bracing from the existing HRSG.

Mechanical

1. Pipe insulation materials are based on Kiewit's engineering standards.
2. Engineered equipment will be supplied as shop primed & finish painted with only field finish paint touchup being performed onsite, unless specified otherwise.
3. Painting of OFE will include touch-up painting of weld areas and the shop applied finish painted surfaces. All modules and access/support steel are assumed to come either finish painted or galvanized.
4. All pumps will be direct coupled, with no variable speed drives, or hydraulic couplings.
5. The estimate assumes the balance of OFE will be delivered by truck/barge to the project site. The following OFE components are anticipated to require special heavy haul loading/unloading: Absorbers, Quencher, Stripper Tower, and other carbon capture equipment. Kiewit has included pricing to offload equipment at the project site. Contractor has not allowed for costs associated with any rail permits, demurrage, site use fees, or any other associated rail-fees.
6. Contractor's standard means and methods of start-up/commissioning and related activities is included.
7. Regulated Metal Deposition (RMD) welding methods is acceptable where practical.
8. The flue gas ductwork material is carbon steel.
9. The estimate assumes that the internal parts of the adsorbers will be shop fabricated. No fabrication or supply of baseplates is included.
10. Estimate includes ductwork insulation for personnel protection only. This applies to all EGR, OSBL, and ISBL ductwork.
11. Contractor takes no risk from balancing the existing Steam Turbine or any turbine work associated with the existing steam tie in points.
12. Flue gas EGR duct installation estimate (duct from TP-028 & TP-029 to TP-03 & TP-04) assumes duct is delivered in prefabricated 40-foot sections of 15 ft. X 15 ft. carbon steel ductwork.
13. The EGR Direct Contact Cooler is estimated as being shop fabricated and transported to site in one fully assembled piece.
14. Estimate includes material supply and installation of 4000 ft of piping for the EGR system.
15. Relocation of existing equipment (identified in screenshot below) has been included.

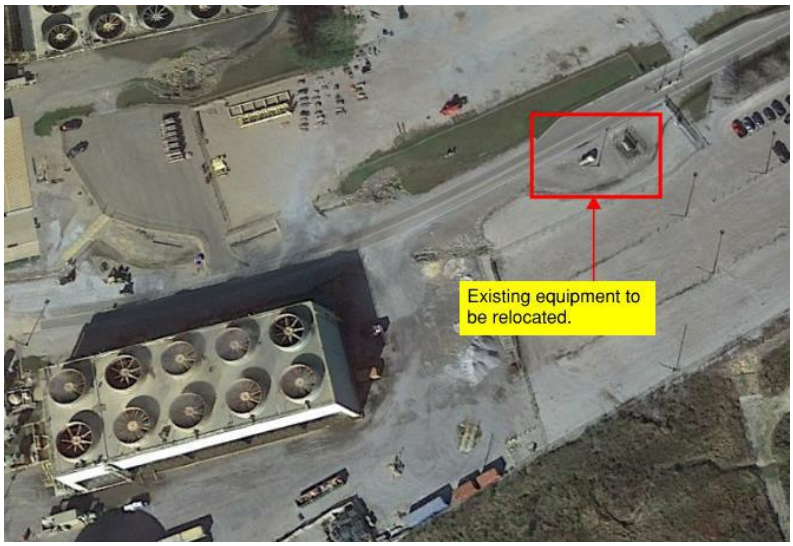

Electrical

1. The estimate is based on Contractor supplying cable typical for application on IPP power plants (i.e. PVC jacketed, fire retardant).
2. The estimate includes 1,450 circuits and 533 instruments for ISBL scope.
3. The estimate includes those studies and calculations required for the Contractor to procure the engineered plant equipment. System, grid, and transmission line studies are not included. Special considerations for grid voltage conditions and/or VAR flow requirements are not included.
4. All plant power and control cabling will be installed in a combination of underground duct bank, above ground cable trays and aboveground conduit. Armored cable may be installed above ground without any raceway.
5. Ground grid quantities provided were based on IEEE 80 grounding study in substation area and loops of major equipment in power block area where low and high resistance grounding is used. Site Fence grounding and grounding to remote areas outside the plant boundaries has not been included in the estimate. Mechanical connections are included in lieu of CAD welds.
6. The interface point for temporary construction power is assumed to be supplied at medium voltage (4.16kV, 6.9kV. or 13.8kV), 2,000 kVA. Cost for temporary power consumption has not been included.
7. No Emergency Diesel Generator has been included for site shutdown.
8. There are no lighting provisions to meet Dark Sky requirements.
9. Contractor will design the auxiliary electric system to limit the Incident Energy Level in accordance with IEEE 1584 methods and guidance. Meeting the incident level will be accomplished if necessary using one of the following methods, depending on the application:
    i. Maintenance switch scheme
    ii. Differential protection
    iii. Fiber-optic arc-flash detection scheme
    iv. Zone-selective interlocking scheme
    v. High-speed overcurrent protection
10. Arc-resistant equipment has not been included. All electrical gear will be per manufacturer's standards.
11. Permanent Arc-flash hazard analysis and signage is not included. Any arc-flash hazard analysis and signage prepared will be for use during construction and commissioning only prior to handover of the equipment.

12. Cable tray installed outdoors with multiple cables trays arranged in a stack configuration will have a cable tray covered on the top layer only. Cable trays installed under modular electrical enclosures will not be installed with cable tray covers.
13. The 480V system will be high resistance grounded.
14. Battery chargers shall be able to recharge the 125VDC battery system in 24 hours. Batteries and UPS shall be sized for two hours of operation.
15. Motors under ¾ horsepower shall be 120V, motors ¾ horsepower to 200 horsepower shall be 460V, and motors greater than 200 horsepower shall be medium voltage.
16. Medium voltage motors shall have 3-wire platinum or copper RTDs for the motor bearing temperature elements in lieu of thermocouples.
17. Aluminum cable tray shall be used. No fiberglass or galvanized steel trays have been included.
18. Cable and I/O tagging will be in accordance with the Contractor's standard scheme.
19. The interrupting short circuit rating of electrical equipment will be as required due to the system conditions.
20. Fiberglass risers and bends may be used in duct banks. Ductbank conduit shall be PVC. No galvanized steel conduit has been included.
21. Mineral insulated heat trace cable shall be used where required.
22. Contractor's standard means and methods of start-up/commissioning and related activities are included.
23. NERC CIP provisions are not included.
24. The use of Foundation Field Bus is not included.

Switchyard

1. Switchyard is not included.

Transmission

1. Transmission is not included.

Carbon Capture Equipment

1. The capture system is based on amine solvent capture process according to the Basis of Design and Linde provided deliverables and quantities.
2. The estimated maximum capture rate is approximately 6,000 tonnes/day.
3. Estimate is based on two trains, each with a single absorber. Equipment redundancy is provided as per the equipment list.
4. The absorber structure is estimated as a round steel design delivered to site in one piece.
5. The absorber/quencher/regenerator bed packing installation only has been carried in the estimate as a subcontract cost. Bed packing material supply and delivery to site is by Others.
6. Site specific air emission limits have not been reviewed by Kiewit.
7. Estimate includes material supply of ductwork between the absorber and quencher.
8. All piping inside of boundary limit for the Linde carbon capture process has been routed above ground.
9. The Linde inside of boundary limit pipe quantity basis of estimate is 53,200 linear feet.
10. All Linde process piping will be designed and purchased by Linde and installed by contractor.
11. Kiewit has assumed Linde will supply ISBL vessels, absorbers, direct contact coolers, stripper towers, and any other tanks as fully shop assembled and insulated, where required.

CAPITAL COST RESULTS

The following are the Capital Cost Estimates for:

1) Base Modifications required to existing Steam Turbine, HRSG, and BOP required to implement CCS of any kind
2) Exhaust Gas Recirculation (EGR) System to increase CCS inlet CO2 concentration and decrease flue gas total flow. This includes the required GT modifications to allow EGR (DLN 2.6+ Combustor, Compressor Material Upgrade and coatings, and GT controls system).
3) GT Modification to retain net NGCC/CCS net output and retain operational reliability.
4) CCS Core (ISBL) CO_2 Capture System (includes DCC, Absorber, Stripper and Reboiler)
5) CCS Core (ISBL) CO_2 Compression System (includes CO_2 Compressors, Dryers, and Intercoolers)
6) CCS BOP (OSBL) Cooling Water System (includes CCS Cooling Tower, Cooling Water Circulation Pumps and Heat Exchangers)
7) CCS BOP (OSBL) Electrical, Civil, Mechanical Interfaces to NGCC
8) Initial fill of CCS inventory (Solvent and Activated Carbon)

Total Project Cost ($MM)	**(1)**	**(2)**	**(3)**	**($)**	**(5)**	**(6)**	**(7)**	**(8)**	**TOTAL**
All Costs are shown in Dec 2018 $(US) All Costs are +30%/-20%	**Base Mods to Existing Plant**	**EGR System**	**GT Mods**	**CCS ISBL CO_2 Capture System**	**CCS ISBL CO_2 Compress System**	**CCS OSBL CW System**	**CCS OSBL Other Equipment**	**Initial Fill**	
Equipment	$18.01	$42.51	$38.33	$119.44	$43.41	$18.50	$29.33	$23.41	$332.9
Piping/Ducting	-	$7.27	-	$90.78	$26.26	$5.04	$19.82		$149.2
Foundations	-	$2.69	$1.18	$11.73	$3.81	$3.01	$11.81		$34.2
Civil/Structural	-	$8.36	$2.95	$52.02	$10.29	$5.81	$28.36		$107.8
Labor & Balance	$9.70	$5.50	$16.51	$73.81	$11.88	$6.23	$23.37		$147.0
Sub-Total TPC	$27.71	$66.33	$58.97	$347.79	$95.65	$38.59	$112.69	$23.41	$771.1
Contingency	$1.09	$7.31	$1.81	$69.42	$19.10	$7.70	$27.15		$133.6
Total Project Cost ($MM)	**$28.79**	**$73.64**	**$60.78**	**$417.21**	**$114.75**	**$46.28**	**$139.84**	**$23.41**	**$904.7**
Total Overnight Cost ($MM)									$1,099.7
Total As-Spent Cost ($MM)									**$1,198.6**

Design of the capture system is required to support a capital cost estimate consistent with AACE (Association of the Advancement of Cost Engineering) Class 3 with an expected accuracy range of -10% to -20% on the low side and +10% to +30% on the high side. The actual cost estimate uncertainty was monitored from each of the major areas and combined into an overall uncertainty.
The resulting composite Capital Cost Uncertainty is +28.5% / -17.7% and is within the targeted +30/-20% range.

In Nov 2023 $(US) the same casts are:

Total Project Cost ($MM)	(1)	(2)	(3)	($)	(5)	(6)	(7)	(8)	TOTAL
All Costs are shown in Dec 2023 $(US) All Costs are +30%/-20%	**Base Mods to Existing Plant**	**EGR System**	**GT Mods**	**CCS ISBL CO_2 Capture System**	**CCS ISBL CO_2 Compress System**	**CCS OSBL CW System**	**CCS OSBL Other Equipment**	**Initial Fill**	
Equipment	$23.03	$60.40	$47.34	$169.19	$60.90	$27.18	$46.81	$29.94	$464.8
Piping/Ducting	-	$10.69	-	$133.39	$38.58	$7.40	$29.12		$219.2
Foundations	-	$3.95	$1.46	$17.24	$5.60	$4.43	$17.35		$50.0
Civil/Structural	-	$12.28	$3.64	$76.44	$15.11	$8.54	$41.67		$157.7
Labor & Balance	$12.40	$8.09	$20.39	$108.45	$17.46	$9.16	$34.33		$210.3
Sub-Total TPC	$35.43	$95.41	$72.83	$504.70	$137.65	$56.70	$169.28	$29.94	$1,101.9
Contingency	$1.39	$10.62	$2.23	$100.74	$27.49	$11.31	$39.75		$192.4
Total Project Cost ($MM)	**$36.82**	**$106.03**	**$75.06**	**$605.44**	**$165.14**	**$68.01**	**$209.03**	**$29.94**	**$1,295.5**
Total Overnight Cost ($MM)									$1,574.6
Total As-Spent Cost ($MM)									**$1,716.4**

Design of the capture system is required to support a capital cost estimate consistent with AACE (Association of the Advancement of Cost Engineering) Class 3 with an expected accuracy range of -10% to -20% on the low side and +10% to +30% on the high side.
The actual cost estimate uncertainty was monitored from each of the major areas and combined into an overall uncertainty.

The resulting composite Capital Cost Uncertainty is +28.7% / -18.0% and is within the targeted +30/-20% range.

Note that the Initial Fill values are based on:

1) 4022 tonnes @ 40% wt (1608.8 tonnes @ 100%) OASE Blue Solvent
2) $14.30/kg solvent cost in 2018$(US), $18.30/kg solvent cost in 2023$(US)
3) $400k (2018$ US)/$500k (2023$ US) for all other initial fills (324k gal Caustic Soda, 3402 tonnes Pot Ash (K_2CO_3), 176 kg Anti-Foam Agent, 182 tonnes Activated Carbon)

This space intentionally left blank

This space intentionally left blank

Maintenance Cost Estimate

Maintenance Cost is Summarized as Fixed Operating Cost (fixed regardless of number of hours operated) and Variable Operating Costs (costs that vary with number of hours operated). The FOC and VOC are shown for the base NGCC, for the CCS addition, and for the combined NGCC.CCS. Fixed Operating Costs shown do not include property taxes and insurance.

Variable Operating Costs assume 85% Capacity Factor (7,446 hrs/yr). NGCC FOC and VOC are representative and are not from actual plant.

Variable Cost for the CCS solvent is based on guaranteed levels from BASF, shown in the Linde &AE 1000 P-CU 1001 (EN) "Utility and Chemical Consumption" document of 490 tonne/yr, which translates to 0.3 kg of solvent (100% concentration) usage per 1 tonne of CO_2 captured.

All in Dec 2018 $MM(US)/yr (2023$ in [])	Unit Rates	NGCC	CCS Addition	NGCC/CCS
Fixed Operating Costs				
Annual Operating Labor	0.247 [0.271]	2.22 [2.44]	0.46 [0.51]	2.68 [2.95]
Maintenance Labor	0.164 [0.181]	3.28 [3.61]	2.30 [2.53]	5.58 [6.14]
Administrative & Support Labor	0.108 [0.118]	1.72 [1.89]	0.22 [0.24]	1.94 [2.13]
Total FOC	**0.160 [0.176]**	**7.22 [7.94]**	**2.98 [3.28]**	**10.20 [11.22]**
Variable Operating Costs				
Maintenance Material		4.90 [5.39] $1.18/MW-hr	8.14 [8.95] $4.99/tonne CO_2	13.04 [14.34]
Consumables				
Water		0.93 [1.02]	0.79 [0.87]	1.72 [1.89]
Makeup and Waste Water Treatment Chemicals		0.78 [0.86]	0.68 [0.75]	1.46 [1.61]
Ammonia		0.28 [0.31]	0.005 [0.006]	0.285 [0.316]
SCR Catalyst		0.11 [0.12]		0.11 [0.12]
CO_2 Capture System Chemicals	$14.30/kg [18.33]		7.00 [8.97]	7.00 [8.97]
Triethylene Glycol			0.83 [0.91]	0.83 [0.91]
Total Consumables		2.10 [2.31]	11.28 [12.41]	13.38 [14.72]
Waste Disposal				
SCR Catalyst		0.002		0.002
Triethylene Glycol			0.04	0.04
Amine Purification Unit Waste			0.07 [0.08]	0.07 [0.08]
Thermal Reclaimer Unit Waste			0.006 [0.007]	0.006 [0.007]
Total Waste Disposal		0.002	0.12 [0.13]	0.122 [0.132]
Total VOC		**7.00 [7.70]**	**19.54 [21.49]**	**26.54 [29.19]**
TOTAL O&M Costs		**14.22 [15.64]**	**22.52 [24.77]**	**36.74 [40.41]**

Cost of Capture and CO_2 Avoided Cost

TECHNO-ECONOMIC ANALYSIS ASSUMPTIONS

- All Costs are shown in Dec 2018 and 2023 dollars ($ US)
- EGR included in design with reduced CCS solvent degradation in Variable Operating Costs
- No treatment required for discharge water from CCS containment or process condensate from Direct Contact Coolers (routed to Cooling Tower basin)
- 85% Capacity Factor for NGCC and CCS (7446 hrs/yr)
- CCS operates 100% of the time NGCC is operated
- 95% CO_2 capture over entire operating life of facility
- 45Q tax credit is NOT included in technoeconomic analysis
- $4/MM Btu (HHV) Pipeline fuel cost
    - $20/MM Btu (HHV) H_2 cost for 30% H2 case
    - $32/MM Btu (HHV) RNG cost for blended cases
- Total As-Spent 2018$ Capital Cost ($572.3MM), Fixed Operating Cost ($7.22MM/yr) and Variable Operating Cost ($7MM/yr) for base NGCC as outlined in maintenance cost section
- Total As-Spent Capital Cost ($1198.6MM), Fixed Operating Cost ($2.98MM/yr) and Variable Operating Cost ($19.54MM/yr) for CCS as outlined in previous maintenance cost section
- CO_2 Transportation and Sequestration costs of $10/tonne CO_2
- Fixed Charge Rate of 7.07% applied to convert one-time charges (i.e. CapEx) to annual expenses
- No leakage into or out of HRSG stack or other flue gas ducting

TECHNO-ECONOMIC ANALYSIS RESULTS

Techno-Economic Analysis		GE FOA Proposal		Final	Final (2023$)
CCS Case	Case B31B (Rev 4) – 90% CO_2 capture	GEGP Case 2 – 95% CO_2 capture	GEGP Case 2 – 95% CO_2 capture plus EGR	GEGP Case 1 – 95% CO_2 capture plus EGR	GEGP Case 1 – 95% CO_2 capture plus EGR
Net CO2 Reduction (with CCS, H2/DCA, and/or RNG)					
NGCC/CCS Plant Net Power (MWe)	646	638	640	556.9	556.9
NGCC/CCS Plant Aux Load (MWe)	44.1	52.3	53.5	47.6	47.6
NGCC/CCS Plant Net Efficiency (%, HHV)	**47.7**	**47.1**	**47.2**	**44.54**	**44.54**
Exhaust Gas Flowrate (tonne/hr, dry basis)	3,709	3709.0	2041.0	3708.5	3708.5
CO_2 Product Flowrate (tonne/day)	5,373	4682.8	4687.5	4466.3	4466.3
CCS CAPEX ($MM)	$619	$400	$360	$1,047	$1,498
CO_2 Compression CAPEX ($MM)	$60	$32	$32	$152	$219
Total CCS + Compression CAPEX ($MM)	$678	$432	$392	$1,199	$1,716
OPEX (variable + fixed) ($MM/year)	$68	$63	$63	$37	$40
CCS Specific Reboiler Duty (GJ/tonne CO_2)	2.78	3.10	2.77	2.70	2.70
CCS Plant Electrical Power Consumption (MW)	10.6	19.1	20.3	18.4	18.4
CO_2 Compression Electrical Power Consumption (MW)	17.1	16.8	16.8	20.8	20.8
Cost of Electricity (COE) incl. T&S ($/MWh)	**$74.38**	**$68.20**	**$67.43**	**$73.62**	**$86.56**
COE % Reduction vs Case B31B	*Base*	*8.3%*	*9.4%*	*1.0%*	*-16.4%*
Breakeven CO_2 Sales Price excl T&S ($/tonne CO_2)	**$79.57**	**$61.39**	**$59.68**	**$76.43**	**$100.18**
Breakeven CO_2 Sales Price % Reduction vs Case B31B	*Base*	*22.9%*	*25.1%*	*3.9%*	*-25.9%*
Breakeven CO_2 Emission Penalty ($/tonne CO_2)	$102.34	$87.43	$85.48	$88.46	$112.77
Breakeven CO_2 Penalty Reduction vs Case B31B	*Base*	*15.0%*	*16.9%*	*13.6%*	*-10.2%*
***T/S = CO_2 transport & storage**					
Estimated Economic Analysis for NGCC plant (cost year = 2018)					

TECHNO-ECONOMIC ANALYSIS DISCUSSION

The primary TEA related objectives of this FEED study were:

1) Design and cost a 95% CCS system for the 2x1 7FA Plant Barry unit 6 site
2) Explore the economic and operational viability of applying Exhaust Gas Recirculation
3) Explore the economic and operationally viable upgrades for the GT to recover lost power output
4) Explore the reliable and operationally viable options for integrating the CCS steam supply
5) Maintain NGCC turndown capability
6) Meet the following milestones:
    a. NGCC/CCS Net HHV efficiency > 47.2%
    b. NGCC/CCS Break-even CO_2 Sales Price (excl T&S) <$58/tonne

Final Status:

1) Design and cost a 95% CCS system for the 2x1 7FA Plant Barry unit 6 site
   Done

2) Explore the economic and operational viability of applying Exhaust Gas Recirculation
   Done – EGR is economical and drives >$40MM in net savings to implanting CCS

3) Explore the economic and operationally viable upgrades for the GT to recover lost power output
   Done – Identified multiple GT and Plant modifications that recover ALL of the lost power

4) Explore the reliable and operationally viable options for integrating the CCS steam supply
   Done – Use of HRSG steam supply, coupled with new extraction from ST LP crossover at higher loads and from HP steam header at lower loads

5) Maintain NGCC turndown capability
   Done – Use of DLN 2.6+ and HP steam extraction gives even more turndown capability than current plant

6) Meet the following milestones:
    a. NGCC/CCS Net HHV efficiency > 47.2%
       Final net NGCC/CCS HHV efficiency is **44.54%**. 47.2% target should have been set at 44% (see earlier section in this TEA report)

    b. NGCC/CCS Break-even CO_2 Sales Price (excl T&S) <$58/tonne
       Final Break-even CO_2 Sales Price (excl T&S) is **$76.43/tonne**
       This value is significantly higher than the target or the values tracked as recently as June 2023. The primary cause of this is the CCS installation cost, which increased relative to preliminary rough estimates. This increase was caused by several factors:
        1) The labor rate used previously was based on the assumption of utilizing non-union workforce to install the CCS. After further detailed review, it was concluded that for a job of this magnitude the use of union workforce would be required, and that added almost $100MM
        2) Preliminary costs, particularly on the foundation and civil installation work were low by almost $50MM
        3) Detailed design included several factors geared towards improved operability that drive CapEx up, but are critical maintaining the Plant Barry readiness to serve obligations, such as large CCS Cooling Tower ($20MM).

Maximum Carbon Capture Efficiency

The current CCS technology is capable of being increased. The maximum achievable CCS efficiency is strongly dependent on the CCS Absorber inlet CO_2 concentration. Assuming 40% Exhaust Gas Recirculation is applied, the CCS Absorber inlet CO_2 concentration is approximately 7%vol. The solvent, OASE Bule has been demonstrated in the lab and pilot demonstration to as high as 98% with 7% vol inlet CO_2 concentrations.

To achieve higher than 95% CCS capture efficiency the CCS equipment size (and cost), the solvent circulation flow rates, and the specific steam consumption (lb of steam per lb of captured CO_2) will all increase and will increase at near exponential rates. That is, the incremental cost of going from 96% to 97% will be substantially greater than the incremental cost of going from 95 to 96%. The same is true for the steam usage and the resulting CCS performance penalty.

The pre-conditioning (CCS Direct Contact Cooler) and the post-capture CO_2 compression costs and auxiliary loads will increase at rates proportionate to the increase in CO_2 captured.

The following table and graph shows the incremental impact on CCS CapEx and specific steam consumption as CCS efficiency is increased from 90% to 98%.

CCS Efficiency	CCS TASC, $MM (2018$)	CCS TASC, $MM (2023$)	ΔTASC per 1% CCS Eff	CCS Specific Steam Demand, lb Stm/lb CO_2	CO_2 Capture, MT/yr	CCS Aux Load, MW	NGCC/CCS Net Output, MW
90%	$989	$1,416	base	1.136	1.495	36.2	565.7
91%	$1,016	$1,455	2.7%	1.148	1.511	36.7	564.3
92%	$1,046	$1,497	2.9%	1.162	1.528	37.3	562.7
93%	$1,079	$1,545	3.2%	1.178	1.544	37.8	561.0
94%	$1,117	$1,599	3.5%	1.196	1.561	38.5	559.1
95%	**$1,161**	**$1,662**	**3.9%**	**1.218**	**1.578**	**39.2**	**556.9**
96%	$1,215	$1,740	4.5%	1.245	1.594	40.0	554.4
97%	$1,284	$1,839	5.6%	1.282	1.611	41.1	551.2
98%	$1,384	$1,982	7.5%	1.335	1.627	42.6	546.9

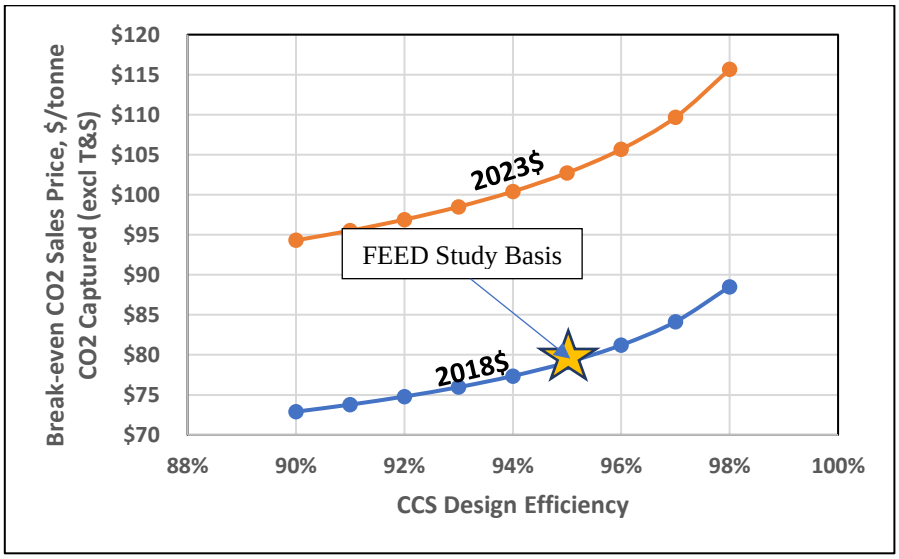

Sensitivity Studies – 90% to 99%

As discussed previously, the current technology – Linde CCS process with BASF OASE Blue, utilizing a 40% Exhaust Gas Recirculation system that elevates the CCS inlet CO_2 concentration to 7%vol and decreased flue gas flow 40% the maximum currently viable capture efficiency is 98%.

To reach 99% CO_2 capture (or 99% reduction in carbon footprint) will require additional process(es) to be added to the 98% CCS. There are currently 2 viable pathways to 99%:

1) Include blended H2 fuel – current short to mid-term targets published by the US EPA are targeting 30% (by volume) H2) blended fuels. This would reduce the CO_2 produced by the combustors in the NGCC by approximately 8%.
    - 30% by volume H2 is 3.75% by weight
    - H_2 heating value is approximately 2.3 times greater per unit weight
    - The GTs will still require approximately the same Btu/lb heat input
        - Net GT fuel consumption with be reduced 4.73% in mass flow, due to the higher specific heating value resulting from the blended fuel
        - Methane fuel flow will be reduced by 8.3%
    - The CO2 produced by the blended fuel will decrease by 8.3%

The result of burning the blended hydrogen/methane fuel will decrease the CO_2 concentration from 7% volume to approximately 6.4% with higher levels of moisture due to the combustion of hydrogen. The resulting CCS efficiency capability will decrease slightly, but the overall carbon footprint will decrease by 5-7%. This results in an equivalent CO2 capture/reduction efficiency of 98.1 to 98.15%. Additional technology is required to get to 99%. The cost of applying 30% blended hydrogen is modest on both capital and operating costs. On CapEx there are 3 moderate changes needed in the plant: a blending skid is required to mix the pipeline natural gas and the hydrogen (assuming that they are conveyed to the plant in separate pipelines; the GT inlet fuel manifolds and gas piping must be upgraded for both material compatibility and slightly larger volumetric flows; and the GT flame detectors and software must be upgraded to non-optical detectors. The operating costs increase because the hydrogen fuel is 4-5 times the cost of the pipeline natural gas, so the 30% blended fuel cost goes up by ~15-20%.

1) In order to further reduce the stack CO2 levels, it is recommended to add Direct Air Capture (DAC) to the exhaust stream leaving the Absorber. With a 98% CCS system, the CO_2 concentration leaving the CCS Absorber is approximately 0.14%vol. The DAC would need to reduce the exhaust flue gas from 0.14%vol to a net exhaust concentration of 0.07%vol. Assuming the 30% hydrogen is applied with the 98% CCS and a net 98.15% reduction in stack CO_2 emissions, the DAC would need to be sized for 1.9 tonnes/hr, or 16,644 MT/yr. This will result in a large increase in CapEx, and a hit to NGCC/CCS output of ~14GJ/tonne CO_2, or about 7.4MW additional DAC auxiliary electrical loads. While some literature suggests that the electrical load may be able to go down to ~8.8 GT/tonne, it is at 14GT for today's technology.

2) The second viable pathway to increase the 98% CCS efficiency to a 99% reduction in CO2 emissions is through the application of negative emissions technology (NET) – specifically through the use of a blended Renewable Natural Gas (RNG). Depending on the source (animal manure vs agricultural crop waste) the amount of RNG required to extend the CCS 98% maximum capability to an equivalent 99% is 10-40% RNG. 10% RNG is needed if the source of the RNG is from processed animal manure, whereas 40% RNG is needed if the source of the RNG is from process agricultural crop waste. The CapEx is relatively low, as the only changes needed in the plant is the addition of a blending skid to mix the pipeline natural gas and the RNG (assuming that they are conveyed to the plant in separate pipelines, upgraded fuel scrubbing for the incoming RNG, and upgraded fuel gas chromatograph to monitor fuel composition. There is no change in the plant

auxiliary electrical loads or NGCC/CCS output, but the fuel is significantly more expensive with RNG expected to cost 5-8 times pipeline natural gas. This drives up the blended fuel cost by at least 40%, and perhaps as much as 280%. This will result in a very large rise in operating fuel costs and push the LCOE and CO2 Break-even sales price much higher.

The cases presented and plotted below are the same 90-98% shown previously, with 40% EGR and CCS. The 99% points will show both:

- Pathway 1 with 30% blended hydrogen at $20/MM Btu and DAC to reach 99% CO_2 reduction
  and
- Pathway 2 with
  - 10% blended manure RNG at $20-32/MM Btu to reach 99% effective CO_2 reduction
  - 40% blended crop waste RNG at $20-32.MM Btu to reach 99% effective CO_2 reduction

Plots include projections of

- net NGCC/CCS output
- net NGCC/CCS HHV heat rate
- Total As-Spent Costs (TASC) for the addition of the CCS
  - In the case of 99% reduction, TASC while be shown for CCS and NET individually
- Levelized Cost of Electricity (LCOE) - $/MW-hr
- Break-even CO2 Sales Price - $/tonne CO_2 Captured (or for RNG effective reduction)

Sensitivity Studies – CCS and EGR Capability

	Sensitivity Study/Technology Capability								
						FEED Study			Max Capability
						focus			with CCS and EGR
	2018 cost year								
	CCS with EGR Technology Capability								
Techno-Economic Analysis	all with 40% EGR								
Net CO2 Reduction (with CCS, H2/DCA, and/or RNG)	90.0%	91.0%	92.0%	93.0%	94.0%	95.0%	96.0%	97.0%	98.0%
NGCC/CCS Plant Net Power (MWe)	565.7	564.3	562.7	561.0	559.1	556.9	554.4	551.2	546.9
NGCC/CCS Plant Aux Load (MWe)	44.6	45.1	45.7	46.2	46.9	47.6	48.4	49.5	51.0
NGCC/CCS Plant Net Efficiency (%, HHV)	45.25	45.13	45.01	44.87	44.72	44.54	44.34	44.09	43.74
Exhaust Gas Flowrate (tonne/hr, dry basis)	3708.5	3708.5	3708.5	3708.5	3708.5	3708.5	3708.5	3708.5	3708.5
CO_2 Product Flowrate (tonne/day)	4094.8	4140.3	4185.8	4231.3	4276.8	4322.3	4367.8	4413.3	4458.8
CCS CAPEX ($MM)	$847	$873	$901	$933	$970	$1,013	$1,065	$1,134	$1,232
CO_2 Compression CAPEX ($MM)	$142	$143	$144	$146	$147	$148	$149	$151	$152
Total CCS + Compression CAPEX ($MM)	$989	$1,016	$1,046	$1,079	$1,117	$1,161	$1,215	$1,284	$1,384
OPEX (variable + fixed) ($MM/year)	$39	$39	$39	$39	$39	$40	$40	$40	$40
CCS Specific Reboiler Duty (GJ/tonne CO_2)	2.70	2.70	2.70	2.70	2.70	2.70	2.70	2.70	2.70
CCS Plant Electrical Power Consumption (MW)	16.5	16.8	17.1	17.4	17.9	18.4	19.0	19.8	21.1
CO_2 Compression Electrical Power Consumption (MW)	19.7	19.9	20.2	20.4	20.6	20.8	21.0	21.3	21.5
Cost of Electricity (COE) incl. T&S ($/MWh)	$69.06	$69.78	$70.57	$71.43	$72.41	$73.53	$74.88	$76.59	$79.02
Breakeven CO_2 Sales Price excl T&S ($/tonne CO_2)	$72.90	$73.79	$74.79	$75.97	$77.36	$79.06	$81.22	$84.14	$88.51
Breakeven CO_2 Emission Penalty ($/tonne CO_2)	$80.65	$81.77	$83.02	$84.47	$86.16	$88.21	$90.79	$94.25	$99.42
***T/S = CO_2 transport & storage**									
Estimated Economic Analysis for NGCC plant (cost year = 2018)									

	Sensitivity Study/Technology Capability								
						FEED Study			Max Capability
						focus			with CCS and EGR
	2023 cost year								
	CCS with EGR Technology Capability								
Techno-Economic Analysis	all with 40% EGR								
Net CO2 Reduction (with CCS, H2/DCA, and/or RNG)	90.0%	91.0%	92.0%	93.0%	94.0%	95.0%	96.0%	97.0%	98.0%
NGCC/CCS Plant Net Power (MWe)	565.7	564.3	562.7	561.0	559.1	556.9	554.4	551.2	546.9
NGCC/CCS Plant Aux Load (MWe)	44.6	45.1	45.7	46.2	46.9	47.6	48.4	49.5	51.0
NGCC/CCS Plant Net Efficiency (%, HHV)	45.25	45.13	45.01	44.87	44.72	44.54	44.34	44.09	43.74
Exhaust Gas Flowrate (tonne/hr, dry basis)	3708.5	3708.5	3708.5	3708.5	3708.5	3708.5	3708.5	3708.5	3708.5
CO_2 Product Flowrate (tonne/day)	4094.8	4140.3	4185.8	4231.3	4276.8	4322.3	4367.8	4413.3	4458.8
CCS CAPEX ($MM)	$1,212	$1,249	$1,290	$1,335	$1,388	$1,449	$1,525	$1,622	$1,763
CO_2 Compression CAPEX ($MM)	$204	$206	$208	$210	$211	$213	$215	$217	$218
Total CCS + Compression CAPEX ($MM)	$1,416	$1,455	$1,497	$1,545	$1,599	$1,662	$1,740	$1,839	$1,982
OPEX (variable + fixed) ($MM/year)	$40	$41	$41	$41	$41	$41	$42	$42	$42
CCS Specific Reboiler Duty (GJ/tonne CO_2)	2.70	2.70	2.70	2.70	2.70	2.70	2.70	2.70	2.70
CCS Plant Electrical Power Consumption (MW)	16.5	16.8	17.1	17.4	17.9	18.4	19.0	19.8	21.1
CO_2 Compression Electrical Power Consumption (MW)	19.7	19.9	20.2	20.4	20.6	20.8	21.0	21.3	21.5
Cost of Electricity (COE) incl. T&S ($/MWh)	$76.66	$77.60	$78.63	$79.76	$81.05	$82.53	$84.33	$86.62	$89.87
Breakeven CO_2 Sales Price excl T&S ($/tonne CO_2)	$94.31	$95.52	$96.90	$98.50	$100.40	$102.73	$105.68	$109.68	$115.67
Breakeven CO_2 Emission Penalty ($/tonne CO_2)	$101.48	$102.98	$104.67	$106.61	$108.89	$111.65	$115.14	$119.82	$126.83
***T/S = CO_2 transport & storage**									
Estimated Economic Analysis for NGCC plant (cost year = 2023)									

Sensitivity Studies – 2 Pathways to 99% with additional technology

	Option 1 - 30% H2 plus DAC		Option 2 - RNG Blended with pipeline NG		
Sensitivity Study/Technology Capability	30% H2	30% H2 and DAC	Animal Manure	Blended	Crop Waste
			10% RNG	25% RNG	40% RNG
	2018 cost year		2018 cost year		
	Option 1 - Pathway to 99% CO2 reduction		Option 2 - Pathway to 99% CO2 reduction		
Techno-Economic Analysis	30% H2	30% H@ and DAC	10% RNG	25% RNG	40% RNG
Net CO2 Reduction (with CCS, H2/DCA, and/or RNG)	98.1%	99.0%	99.0%	99.0%	99.0%
NGCC/CCS Plant Net Power (MWe)	549.1	540.7	546.9	546.9	546.9
NGCC/CCS Plant Aux Load (MWe)	51.0	51.0	51.0	51.0	51.0
NGCC/CCS Plant Net Efficiency (%, HHV)	43.91	43.25	43.74	43.74	43.74
Exhaust Gas Flowrate (tonne/hr, dry basis)	3708.5	3708.5	3708.5	3708.5	3708.5
CO_2 Product Flowrate (tonne/day)	4291.6	4291.6	4458.8	4458.8	4458.8
CCS CAPEX ($MM)	$1,231	$1,302	$1,280	$1,280	$1,280
CO_2 Compression CAPEX ($MM)	$151	$151	$156	$156	$156
Total CCS + Compression CAPEX ($MM)	$1,382	$1,453	$1,436	$1,436	$1,436
OPEX (variable + fixed) ($MM/year)	$35	$40	$37	$37	$37
CCS Specific Reboiler Duty (GJ/tonne CO_2)	2.70	2.70	2.70	2.70	2.70
CCS Plant Electrical Power Consumption (MW)	21.1	29.4	21.1	21.1	21.1
CO_2 Compression Electrical Power Consumption (MW)	21.5	21.5	21.5	21.5	21.5
Cost of Electricity (COE) incl. T&S ($/MWh)	$87.61	$91.51	$101.02	$133.78	$166.55
Breakeven CO_2 Sales Price excl T&S ($/tonne CO_2)	$92.36	$99.80	$97.44	$110.22	$122.99
Breakeven CO_2 Emission Penalty ($/tonne CO_2)	$99.03	$107.78	$108.44	$121.33	$134.22
***T/S = CO_2 transport & storage**					
Estimated Economic Analysis for NGCC plant (cost yea	$20/MM Btu H2		$32/MM Btu RNG		
	Costs include H2 Fuel Mods	Costs and Perf Include H2 fuel and DAC Impats	Costs include RNG fuel mods (blending skid and fuel cleanup)		

	Option 1 - 30% H2 plus DAC		Option 2 - RNG Blended with pipeline NG		
Sensitivity Study/Technology Capability	30% H2	30% H2 and DAC	Animal Manure	Blended	Crop Waste
			10% RNG	25% RNG	40% RNG
	2023 cost year		2023 cost year		
	Option 1 - Pathway to 99% CO2 reduction		Option 2 - Pathway to 99% CO2 reduction		
Techno-Economic Analysis	30% H2	30% H@ and DAC	10% RNG	25% RNG	40% RNG
Net CO2 Reduction (with CCS, H2/DCA, and/or RNG)	98.1%	99.0%	99.0%	99.0%	99.0%
NGCC/CCS Plant Net Power (MWe)	549.1	540.7	546.9	546.9	546.9
NGCC/CCS Plant Aux Load (MWe)	51.0	51.0	51.0	51.0	51.0
NGCC/CCS Plant Net Efficiency (%, HHV)	43.91	43.25	43.74	43.74	43.74
Exhaust Gas Flowrate (tonne/hr, dry basis)	3708.5	3708.5	3708.5	3708.5	3708.5
CO_2 Product Flowrate (tonne/day)	4291.6	4291.6	4458.8	4458.8	4458.8
CCS CAPEX ($MM)	$1,699	$1,770	$1,766	$1,766	$1,766
CO_2 Compression CAPEX ($MM)	$212	$212	$218	$218	$218
Total CCS + Compression CAPEX ($MM)	$1,911	$1,982	$1,985	$1,985	$1,985
OPEX (variable + fixed) ($MM/year)	$41	$48	$44	$44	$44
CCS Specific Reboiler Duty (GJ/tonne CO_2)	2.70	2.70	2.70	2.70	2.70
CCS Plant Electrical Power Consumption (MW)	21.1	29.4	21.1	21.1	21.1
CO_2 Compression Electrical Power Consumption (MW)	21.5	21.5	21.5	21.5	21.5
Cost of Electricity (COE) incl. T&S ($/MWh)	$98.27	$102.72	$112.29	$145.05	$177.81
Breakeven CO_2 Sales Price excl T&S ($/tonne CO_2)	$120.18	$128.31	$125.64	$138.41	$151.19
Breakeven CO_2 Emission Penalty ($/tonne CO_2)	$125.95	$135.80	$136.89	$149.79	$162.68
***T/S = CO_2 transport & storage**					
Estimated Economic Analysis for NGCC plant (cost year = 2023)	$20/MM Btu H2		$32/MM Btu RNG		
	Costs include H2 Fuel Mods	Costs and Perf Include H2 fuel and DAC Impats	Costs include RNG fuel mods (blending skid and fuel cleanup)		

Sensitivity Studies – NGCC/CCS Net Output plot 90-99%

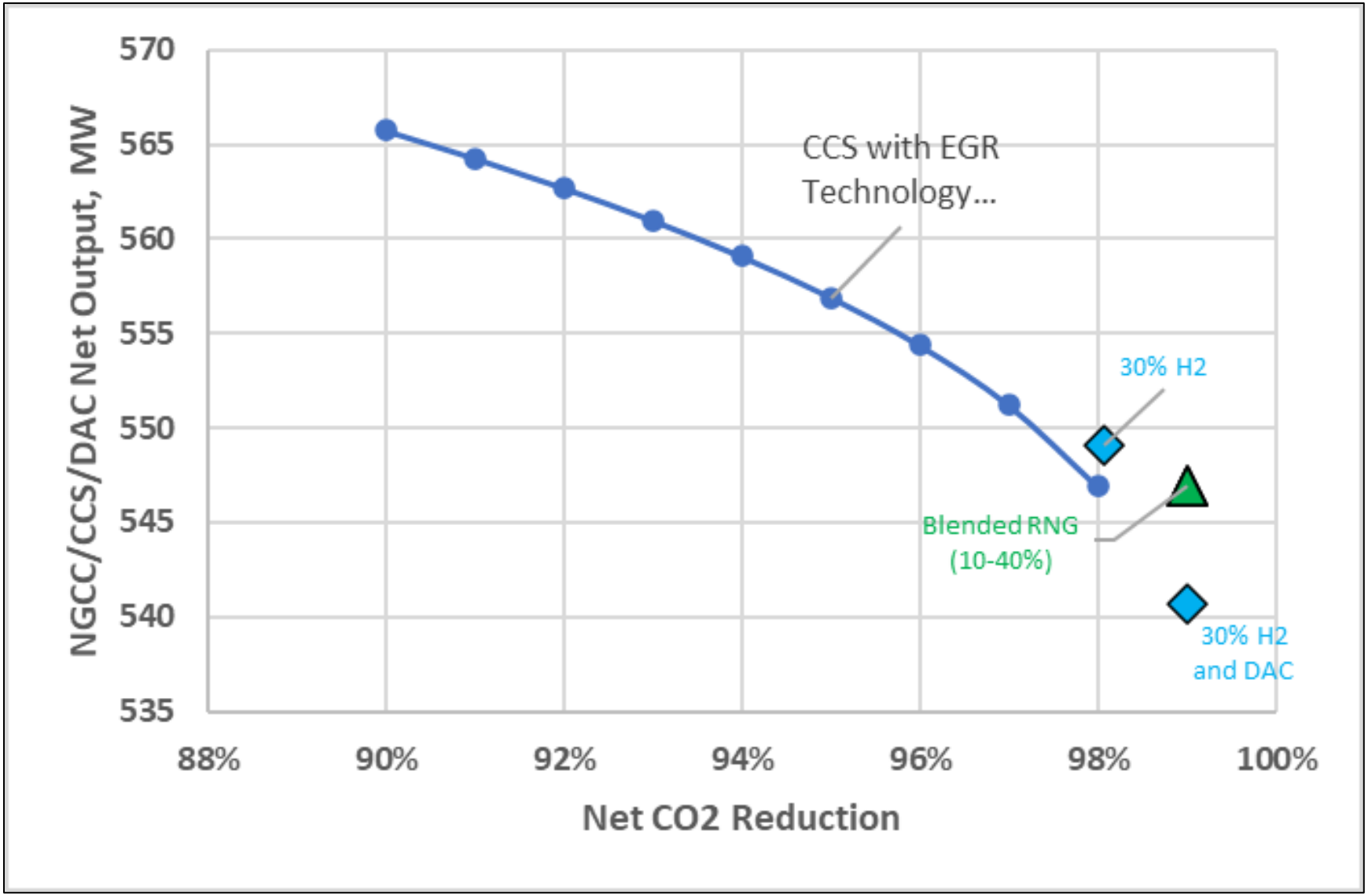

Sensitivity Studies – Lifecycle Cost of Electricity plot 90-99% (2018$)

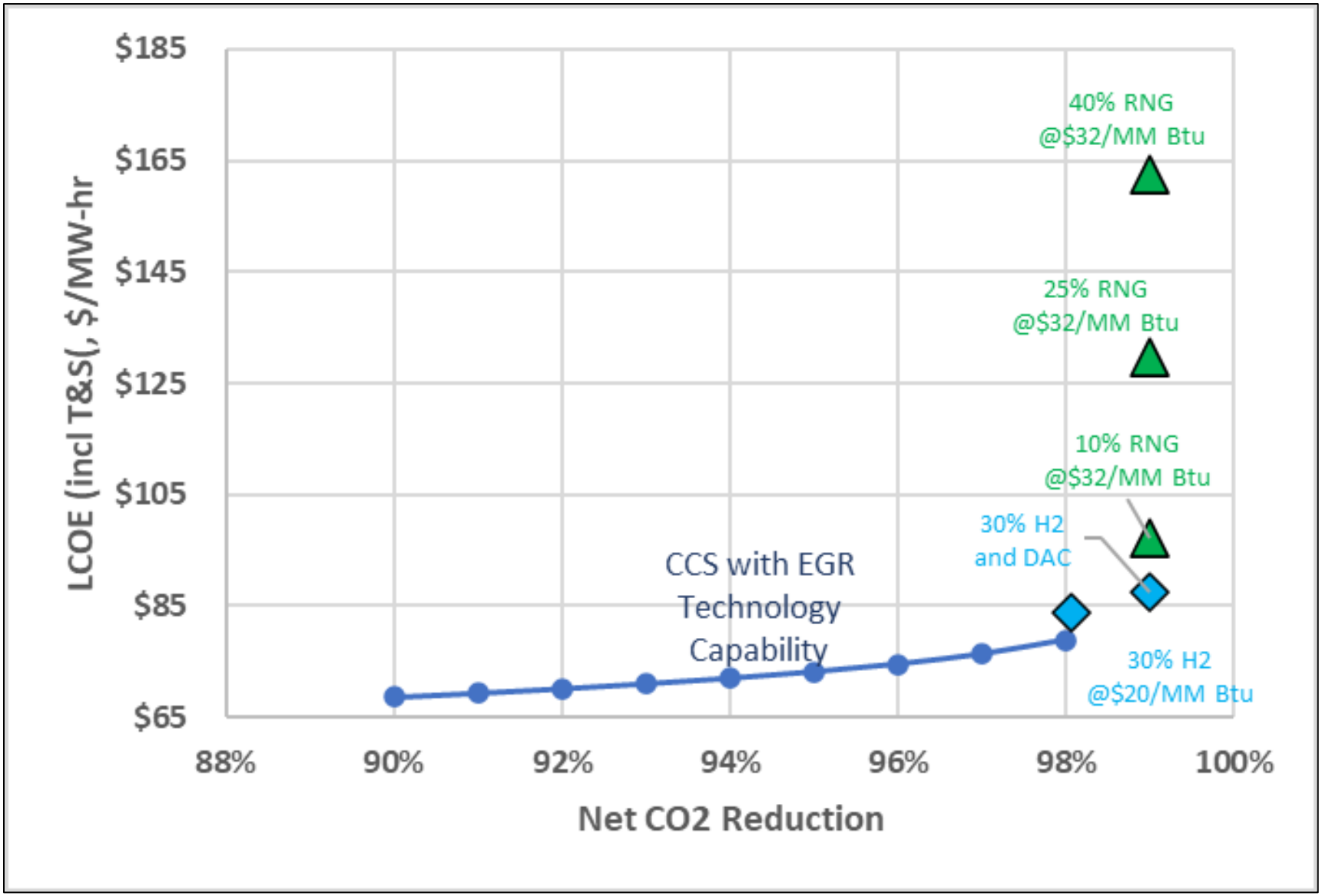

Sensitivity Studies – Lifecycle Cost of Electricity plot 90-99% (2023$)

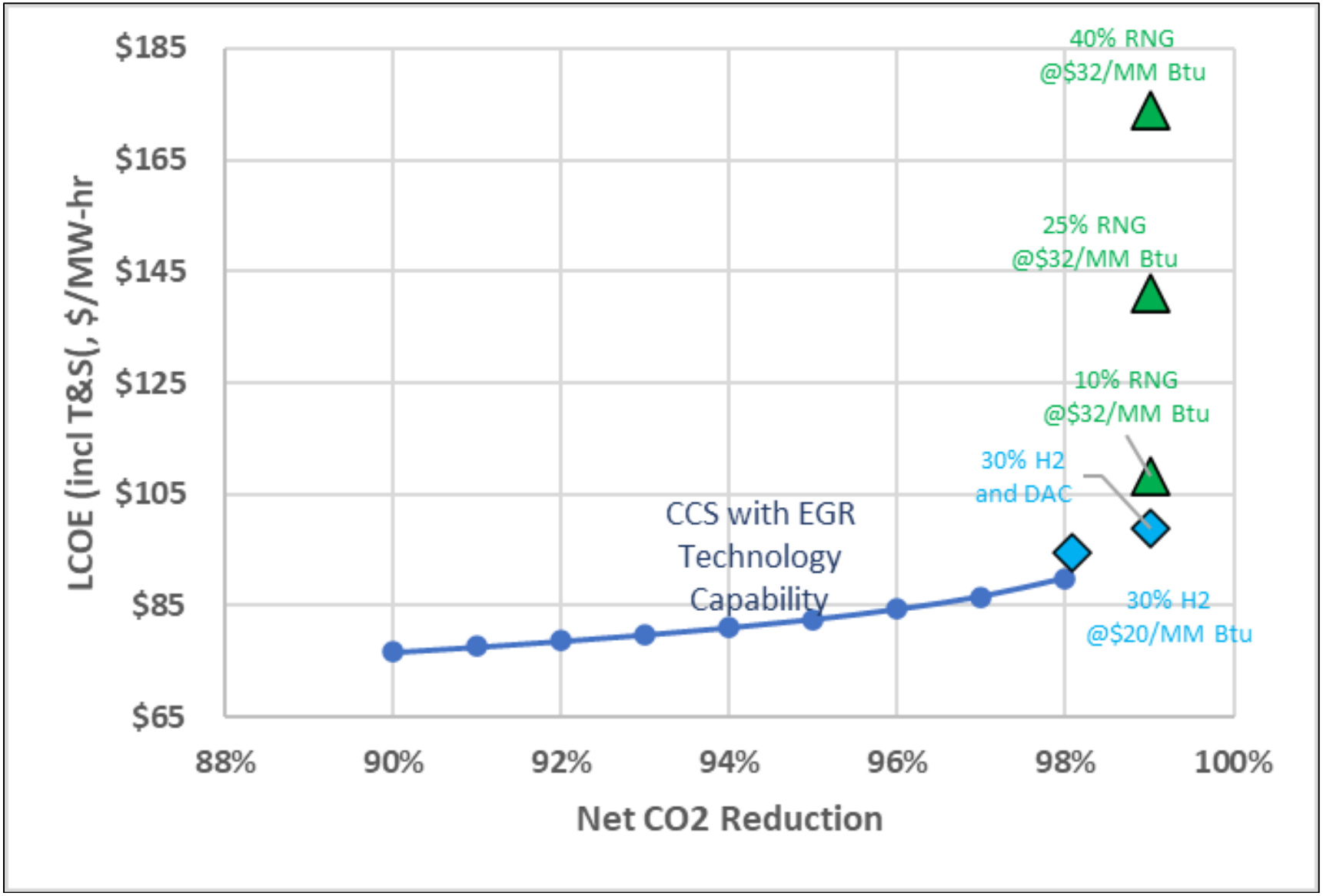

Sensitivity Studies – Break-even CO_2 Sales Price plot 90-99% (2018$)

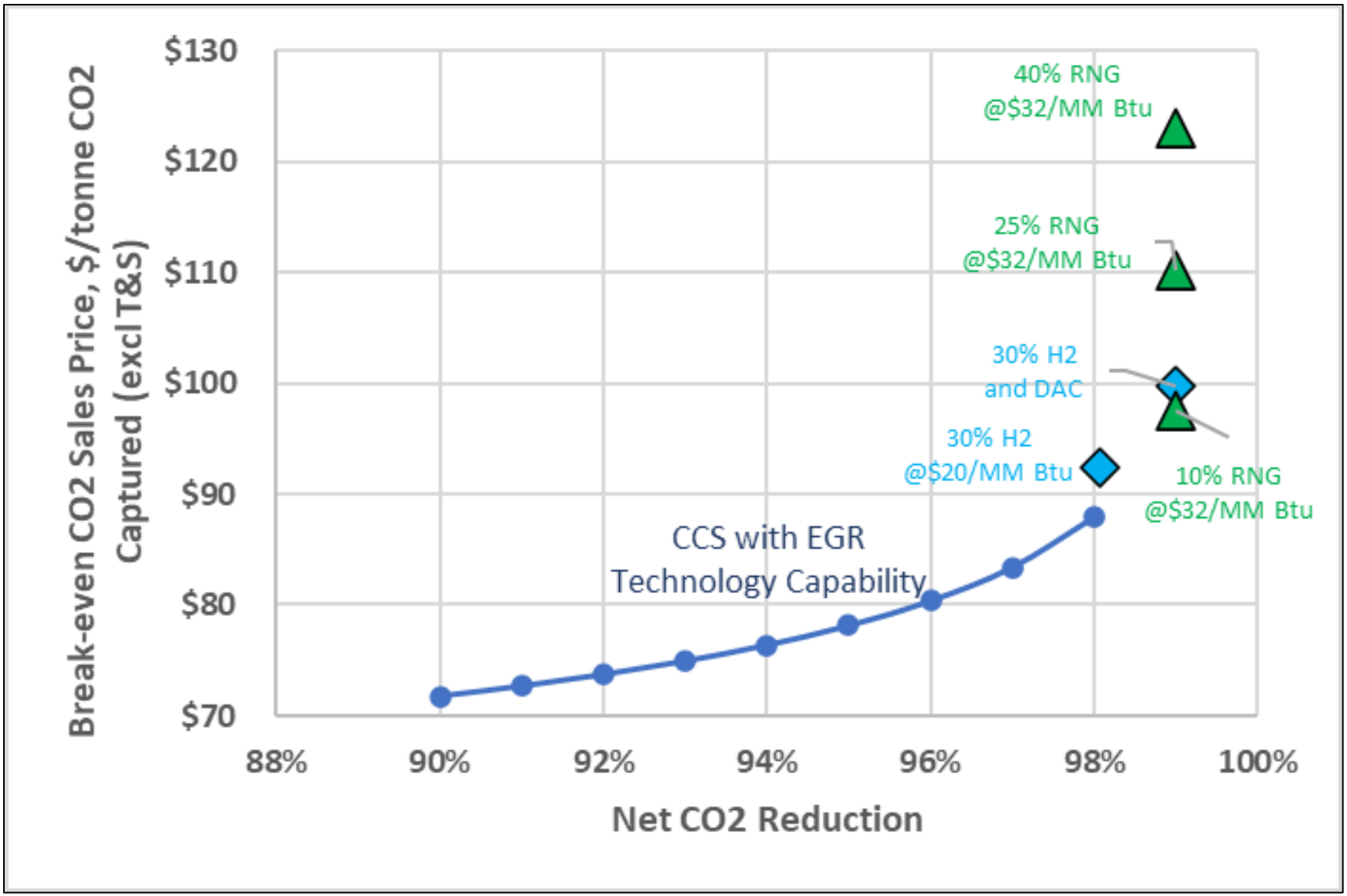

Sensitivity Studies – Break-even CO_2 Sales Price plot 90-99% (2023$)

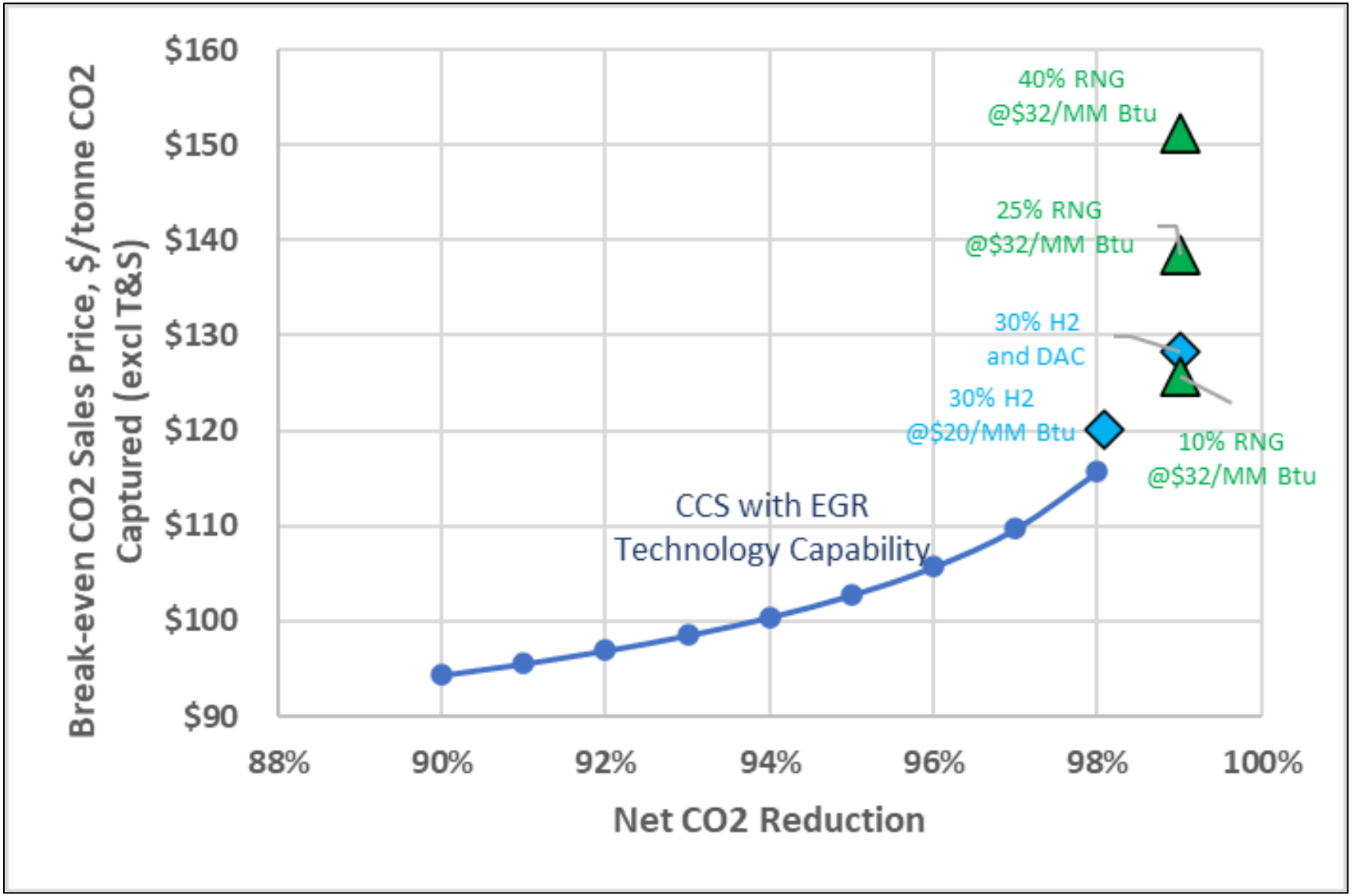

Appendix B

Statement of Project Objectives (SOPO)

STATEMENT OF PROJECT OBJECTIVES

Retrofittable Advanced Combined Cycle Integration for Flexible Decarbonized Generation

A. OBJECTIVES

The Recipient will design and integrate a "Gen2" post-combustion 95% Carbon Capture System (CCS) system into an existing domestic Natural Gas Combined Cycle (NGCC) power plant with emphasis on optimized plant integration and performance, reduced CCS cost, and increased operability/flexibility to accommodate and complement renewable power sources. The Recipient will investigate integration concepts, including use of Exhaust Gas Recirculation (EGR), turbine inlet cooling/chilling, integrated steam extraction "Gen2" carbon capture technology, and integrated plant level controls. These technologies are proven for enhancing NGCC operation but have not been thoroughly investigated in a combined NGCC/CCS system. This project will begin with conceptual designs, leading to a single NGCC/CCS configuration and conclude with a detailed design and technoeconomic and life cycle analyses (TEA and LCA) focused on integration of CCS with the NGCC power plant. The program will focus on operability to include startup/shutdown, and a range of outputs and loads. This emphasis is critical to enable NGCC plants with CCS to complement renewable power sources (fast starts, load following) and advances the state of the art in carbon capture. The optimization and operability assessment are areas that will drive a balance of improved TEA and thus business case viability, and as well the technical viability across the real-world plant operating profile. These are critical to widespread adoption of CCS technology.

B. SCOPE OF WORK

The Recipient will select the NGCC power plant/CCS interfaces to minimize integrated performance loss, advancing to 95% from previous 90% CO_2 capture FEED studies, and investigate impact of Exhaust Gas Recirculation (EGR) to reduce CCS cost. This will include detailed heat and mass balances, Piping

and Instrumentation Diagrams (P&IDs), piping layouts, electrical design, and all other details needed to roll-up the capital/operating costs to support plant level TEA for the integrated CCS.

The Recipient will define the overall integrated CCS design impacts on NGCC power plant performance with refined heat and mass balances, operability and flexibility, develop detailed design of CCS equipment and modules both inside the battery limit (ISBL) and outside the battery limit (OSBL) of the CCS, determine the capital and Operation and Maintenance (O&M) costs for the CO_2 capture, perform TEA and LCA assessments, complete Environmental Health and Safety (EH&S) and Hazard and Operability (HAZOP) reviews of the CCS design, and perform sensitivities of CO_2 capture from 90% to as high as 99%. The Host site is Southern Company Plant Barry in Bucks, Alabama.

C. TASKS TO BE PREFORMED

Task 1.0 - Project Management and Planning

Subtask 1.1 – Project Management Plan

The Recipient shall manage and direct the project in accordance with a Project Management Plan to meet all technical, schedule and budget objectives and requirements. The Recipient will coordinate activities to effectively accomplish the work. The Recipient will ensure that project plans, results, and decisions are appropriately documented, and project reporting and briefing requirements are satisfied.

The Recipient shall update the Project Management Plan 30 days after award and as necessary throughout the project to accurately reflect the current status of the project. Examples of when it may be appropriate to update the Project Management Plan include: (a) project management policy and procedural changes; (b) changes to the technical, cost, and/or schedule baseline for the project; (c) significant changes in scope, methods, or approaches; or (d) as otherwise required to ensure that the plan is the appropriate governing document for the work required to accomplish the project objectives.

Management of project risks will occur in accordance with the risk management methodology delineated in the Project Management Plan in order to identify, assess, monitor, and mitigate technical uncertainties as well as schedule, budgetary and environmental risks associated with all aspects of the

project. The results and status of the risk management process will be presented during project reviews and in quarterly progress reports with emphasis placed on the medium- and high-risk items.

Task 2.0 – Front-End Engineering Design Study

The Recipient will execute the FEED study, by first defining the design basis, then performing conceptual design activities of the integrated NGCC-CCS plant to assess multiple NGCC-CCS potential configurations, including steam supply source and potential of applying EGR. The Recipient will then perform detailed design activities of the down-selected NGCC-CCS configuration, including plant interfaces between the core carbon capture and the balance of NGCC plant to assess the high fidelity (-20% to +30%) capital cost and O&M cost estimates for retrofitting the power plant with 95% CO_2 capture add on.

Subtask 2.1 – FEED Study Design Basis

Objective: The Recipient will define the design basis for completing the FEED study.

Approach: The Recipient will define the site characteristics, ambient conditions, fuel feedstock characteristics, plant heat balances, and environmental/permitting requirements. The definition of the ambient, load, and start/stop profile is critical to allow the NGCC/CCS system to be fully optimized for operability. Limits on Gas Turbine (GT) combustor oxygen levels and lean stability limits (to allow EGR assessment) will be identified along with any applicable codes and standards.

Subtask 2.2 – FEED Study Conceptual Design

Objective: The Recipient will perform conceptual design activities of the integrated NGCC-CCS plant.

Approach: This task includes both the carbon capture plant and integration with the existing NGCC plant. The Recipient will assess optimal extraction steam sources, as well as the cooling water integration. The Recipient will investigate impact of Exhaust Gas Recirculation (EGR) to reduce CCS cost with conceptual EGR design and costing, establishing maximum sustainable EGR levels based on previous study efforts. The Recipient will confirm if EGR reduces total NGCC/CCS plant cost and if EGR should be in recommended NGCC/CCS configuration for detailed design. The confirmation of EGR as a part of the NGCC/CCS is critical because it increases the exhaust gas carbon dioxide (CO_2) concentration (up to

2x) and it drives the location of several of the CCS components (exhaust gas direct contract cooler and the absorber tower).

Subtask 2.3 – FEED Study Inside Battery Limits (ISBL) Detailed Design

Objective: The Recipient will perform detailed design activities of the carbon capture plant.

Approach: The Recipient will design the core process area of the CCS plant including process flow diagrams, Piping and Instrumentation Diagrams (P&IDs), heat and material balances, and plot plan. Major process and mechanical equipment specifications and data sheets will be developed along with a summary of effluents, emissions, consumables and auxiliary loads. Potential sub-contractors for fabrication of equipment and modules and site installation work, site preparation and equipment installation, will be identified. Preliminary details of equipment and module foundations will be developed, as well as electrical load lists and one-line diagrams. All required details of the capture island up to tie-in points will be prepared. The Recipient will perform cost estimates for equipment, materials, installation, and construction management.

Subtask 2.4 – FEED Study Outside Battery Limits (OSBL) Detailed Design

Objective: The Recipient will perform the detailed design of the exhaust gas, steam, cooling water, and other plant interfaces between the core carbon capture and the balance of NGCC plant.

Approach: The Recipient will design the interconnections between the core process area of the CCS (ISBL) and the NGCC plant including process flow diagrams, P&IDs, heat and material balances, and a plot plan. Major process and mechanical equipment specifications and data sheets will be completed. Preliminary details of the equipment and module foundations will be developed. Electrical load lists and electrical one-line diagrams will be developed. All required details of the plant tie-in points to CCS will be prepared, including piping and exhaust gas ducting layouts. The scope for the purchase of components and materials for piping, ducting, electrical, and instrumentation, will be developed. Vendor quotes will be obtained for equipment and materials, and costs estimated for installation and construction management

Subtask 2.5 – FEED Study Plant Integration Design

Objective: The Recipient will perform the overall integrated plant design after retrofitting the CO_2 capture including impacts on performance, operability, flexibility, and reliability.

Approach: This task will focus on integration of the existing NGCC plant and the new CO_2 capture add-on to ensure that the plant will operate properly meeting all the grid requirements with minimal impacts on plant performance, costs, operability, and flexibility. Trade-off analysis of various options will be performed, including location of the key units within the CO_2 capture add-on, steam extraction and corresponding steam turbine (ST) modifications, exhaust gas extraction from the existing Heat Recovery Steam Generator (HRSG) stack, integration of current utilities and infrastructure including water treatment. The integration of existing plant controls with the CO_2 capture and compression island controls will also be analyzed. Detailed engineering and design reviews including constructability and HAZOP reviews with engineering experts will be carried out to feed into the costing task. The ST operability with CCS in operation will be assessed and optimized.

Subtask 2.6 – FEED Study Cost Assessment

Objective: The Recipient will define the capital and O&M costs for the CO_2 capture add-on design cases.

Approach: The Recipient will develop high fidelity (-20% to +30%) capital cost and O&M cost estimates for retrofitting the power plant with 95% CO_2 capture add on. Using the detailed design, procurement and construction estimates will be performed for the planned changes in the power plant and the CO_2 capture add-on equipment. The cost estimates will be developed based on previous experience or getting market quotes when necessary, and unit rates for civil and erection works. The O&M cost estimates will be co-developed with the plant owner and the capture technology provider.

Task 3.0 – Commercial Assessments

The Recipient will conduct commercial assessments for retrofitting the power plant with 95% CO_2 capture, including a business case to justify CCS system retrofit, Levelized Cost of Electricity (LCOE) assessment, and assessment of construction/operating risks introduced by the CCS system.

Subtask 3.1 – Business Case Analysis

Objective: The Recipient will assemble a business case to justify implementing NGCC with carbon capture in accordance with SOPO Appendix A.

Approach: The Recipient will perform a fleet assessment, looking at the installed base and the opportunity to retrofit this technology. The fleet assessment will include GE 60 Hz F-class GT's. The CCS can offset the direct footprint of the gas, support greater penetration of wind and solar, and increase its capacity factor to offset more coal.

Subtask 3.2 – Techno-Economic Analysis and Life Cycle Analysis

Objective: The Recipient will perform a comparison of a reference case NGCC to addition of 95% CCS capture efficiency using annual cash flow pro forma for Levelized Cost of Electricity (LCOE) consistent with guidance provided in SOPO Appendices B (TEA) and C (LCA).

Approach: The Recipient will modify established economic value tools for comparison of technologies to assure a consistent, comparable basis to justify a carbon capture upgrade. The Recipient will perform sensitivity analyses to quantify the impact of operating parameters and inputs. The final Techno-Economic Analysis (TEA) will include a sensitivity analysis from 90% to 99% capture efficiency and will identify the maximum capture efficiency achievable with the proposed CCS and the technology pathways to achieve higher capture efficiencies and ultimately zero net carbon emissions. These pathways will outline both the 90% to 99% capture efficiency as well as any suggestions for future studies.

Subtask 3.3 – Technology Environmental Health and Safety Assessment

Objective: The Recipient will assess construction/operating risks introduced by the CCS system following guidance in SOPO Appendix D.

Approach: The Recipient will perform Failure Modes Effects Analysis (FMEA) and assess the carbon capture process focusing on EH&S risks, both in construction/commissioning and in normal operation. The Recipient will investigate air and water emissions, water utilization, solid waste streams, and potential environmental impacts of the technology including toxicological effects and hazards of emissions and waste streams following guidance in SOPO Appendix D.

Task 4.0 – Public Policy Considerations

The Recipient will conduct public policy assessments for retrofitting the power plant with 95% CO_2 capture, including Environmental Justice Analysis to demonstrate support of Executive Order 14008, and Economic Revitalization and Job Creation Outcomes Analysis in accordance with Executive Order 13985.

Subtask 4.1 – Environmental Justice Analysis

Objective: The Recipient will demonstrate support of Executive Order 14008 goals through the design of an integrated NGCC-CCS plant with 95% capture efficiency.

Approach: The Recipient will design a retrofittable "Gen2" capture system capable of 95% carbon capture. The Recipient will incorporate natural resource usage considerations into the design and evaluate potential co-benefits of the carbon capture technology following guidance in SOPO Appendix E.

Subtask 4.2 – Economic Revitalization and Job Creation Outcomes Analysis

Objective: The Recipient will evaluate economic and workforce impacts associated with the application of proposed capture system, in accordance with Executive Order 13985 and SOPO Appendix F.

Approach: The Recipient will assess job creation associated with construction and operation of the capture system. The Recipient will develop training programs to support skills growth, particularly among groups that are historically underserved or underrepresented.

D. DELIVERABLES

The Recipient will submit periodic and final reports in accordance with the "Federal Assistance Reporting Checklist" and the instructions accompanying the checklist. In addition to the reports specified in the "Federal Assistance Reporting Checklist", The Recipient will provide the following to the NETL Project Manager (identified in Block 15 of the Assistance Agreement as the Program Manager).

Task/Subtask	Deliverable Title	Due Date
1.1	Update Project Management Plan	Update due 1 month after award. Revisions to the PMP shall be submitted as requested by the NETL Project Manager.
2.0	FEED Summary Report	16 months after award
2.2	EGR Viability Assessment	4 months after award

2.2	Down-selected NGCC/CCS configuration	4 months after award
2.5	CCS Operating Philosophy	12 months after award
2.6	Capital and O&M Cost Summary	16 months after award
3.1	Business Case Analysis	Within 90 days of project completion
3.2	Techno-Economic Analysis (TEA)	Within 90 days of project completion
3.2	Life Cycle Analysis (LCA)	Within 90 days of project completion
3.3	Technology and EH&S Risk Assessment	Within 90 days of project completion.
4.1	Environmental Justice Analysis	Within 90 days of project completion.
4.2	Economic and Job Creation Analysis	Within 90 days of project completion.

Table 1 Program Deliverables

Note: For items due *within 90 days of project completion*; communication and documentation will be provided to the DOE within the 90 days for their input. Final reports for these items will be delivered at end of their task as described in the PMP.

E. BRIEFINGS/TECHNICAL PRESENTATIONS

The Recipient shall prepare detailed briefings for presentation to the NETL Project Manager at their facility located in Pittsburgh, PA, Morgantown, WV, Albany, OR, or virtually. The Recipient shall make a presentation to the NETL Project Manager at a project kick-off meeting held within ninety (90) days of the project start date. At a minimum, annual briefings shall also be given by the Recipient to explain the plans, progress, and results of the technical effort and a final project briefing at the close of the project shall also be given.

SOPO APPENDIX A – BUSINESS CASE ANALYSIS

A business case analysis is required as a deliverable for this award. The business case analysis demonstrates an understanding of the current and projected landscapes of the natural gas and industrial point sources of CO_2 and the potential utilization of tax credits including their projected revenue and duration.

The first section of the business case analysis should identify the potential market size of a technology option proposed by the applicant. An understanding will be developed of the end- use markets in which coal-based products may compete. The analysis will contain a Business Case Analysis; Technical overview; Market analysis; Future deployment projection; and Quantification of potential benefits of the technology.

An outline of each of the five major pieces of the analysis are as follows:

Business Case Analysis

a. A *pro forma* which quantifies the projected financial parameters such as operating costs, operating revenues, financing cash flows, EBITDA, tax credits/liabilities, and ROI over the project lifespan. The Business Case Analysis should also include a list of key economic/financial assumptions.

Technical overview

b. Description of the technology and potential applicability across the natural gas and industrial point source sector area.

Market Analysis

a. Survey of natural gas and industrial point sources
b. Applicability of technology to these sources
c. Financial analysis of application of the technology to these sources
d. Discussion of potential financing structures and partnerships for deployment of the technology
e. Discussion of the potential utilization of tax credits and other incentives, including projected revenue and duration

Future deployment projection

a. Provide the potential deployment scale of the technology across the current and future natural gas and industrial point source sector
b. Identify and compare competing technology options
c. Discussion of potential barriers to large scale deployment

Quantify Potential Benefits of the technology

a. Provide estimates of the potential benefits of large-scale deployment in terms of metrics such as manufacturing jobs, revenue, emissions reductions, etc.

SOPO APPENDIX B – BASIS FOR TECHNO-ECONOMIC ANALYSIS

The Techno-Economic Analysis (TEA) required as part of the project deliverables shall follow the analysis procedures documented in NETL's "*Quality Guidelines for Energy System Studies: Performing a Techno-Economic Analysis for Power Generation Plants*"[15] to the greatest extent possible. Industrial facilities that include power and heat production integrated with the industrial facility should include it in their TEA according to the guidelines. It is highly recommended that the TEA present both the gross CO_2 removed from flue or process gases for the system configuration presented (relevant to equipment sizing), as well as the net CO_2 removed when accounting for other on-site emission point sources within the total plant boundary (informative for system efficiency relating to CO_2 captured). General process flow diagram identifying all major process equipment for the power plant including CO_2 capture and compression systems, separation vessels, heat exchangers, pumps, compressors, etc.

As specifically outlined in the document, required elements of a complete TEA include:

- Material and energy balances around the complete power plant and around all major pieces of equipment there in, including all heating and cooling duties, and electric power requirements
    - For Industrial Capture – include material and energy balances around the completecapture system along with relevant integrations into the Industrial Facility.
- Complete stream tables showing operating pressures, temperatures, compositions, andenthalpies for all streams entering or leaving major process equipment
- Economic analysis that follows the NETL "*Quality Guidelines for Energy System Studies: Cost Estimation Methodology for NETL Assessments of Power Plant Performance*"[16]. The code of accounts for the capital cost estimate will follow those used in the "Cost and Performance Baseline for Fossil Energy Plants - Volume 1: Bituminous Coal and Natural Gas to Electricity (Rev4, 2019)," aka Bituminous Baseline Study (BBS) BBS. Operating and maintenance cost will be itemized and also follow the format used in the BBS.
- The developer will prepare estimates for equipment and consumables unique to the process being developed. If possible, capital cost estimates for unique equipment will be made based on similar equipment that may exist for other type processes. If equipment analogs do not existfor unique equipment the developer must do a bottoms-up estimate of the unique equipment.

Involvement of a variety of stakeholders is seen as an important facet to providing a fully integrated CO_2 capture system. It is considered critical that a qualified organization with professional experience in performing this type of work conduct the TEA. *This activity shall not be viewed as a training exercise for inexperienced personnel.*

15 Quality Guidelines for Energy System Studies: Performing a Techno-Economic Analysis for Power GenerationPlants, National Energy Technology Laboratory, DOE/NETL-2015/1726, July 2015, https://netl.doe.gov/energy-analysis/details?id=711

16 http://www.netl.doe.gov/File%20Library/research/energy%20analysis/publications/QGESSNETLCostEstMethod.pdf

Assumptions and methodology to be used for the study are discussed below.

System Boundaries (as/if applicable to the technology proposed):

1) Delivered natural gas entering the power plant, through high-pressure, high-purity CO2 stream crossing the plant boundary.
2) Combustion air
3) Ambient air conditions
4) Flue gas to stack
5) Net electricity conditioned and sent to electric grid
6) Raw make-up water
7) Waste streams generated by the plant, including the CO_2 capture system, shall be adequately treated on-site prior to disposal either by landfill or other commercial disposal options.

Process Design Assumptions (as/if applicable to the technology proposed):

The process design shall be based on a nominal 500,000 tonnes of CO_2 captured per year. The study should include at a minimum the following:

1) Site Characteristics and Ambient Conditions for each location
2) Cryogenic Air Separation Unit Design (if incorporated)
3) Boiler or Gasifier Design (if incorporated)
4) Steam or Gas Turbine Cycle Conditions (if incorporated)
5) CO_2 utilization unit design (if incorporated)
6) Energy storage Unit design (if incorporated)
7) Environmental Controls and Performance
8) Balance of Plant
9) Economic Assumptions and Methodology
10) Reporting Requirements (including significant process figures, stream and performance tables, equipment lists, and cost accounts)

Design Basis for CO_2 Capture and Compression:

CO_2 Removal	**95%**
CO_2 Purity	**Satisfy 'Conceptual Design Limits' for Enhanced Oil Recovery as listed in Exhibit2-1 of the NETL "*Quality Guidelines for Energy System Studies: CO_2 Impurity Design Parameters.*"**
CO_2 Delivery Pressure	**2,215 psia**
CO_2 Transport & Storage Cost	**$10/tonne CO_2**
Steam Extraction Location, if used	**Give location from steam source design**

Process Flow Diagram & Material Energy Balances:

To adequately provide reviewers a clear understanding of the proposed process and project, all applications must include a block flow diagram (.pdf file legible at 8.5 inches by 11 inches) and a corresponding process description. Any required integrations into power or balance of plant for the proposed CO_2 capture process so that it can be cost-effectively developed shall also be discussed. If alternative CO_2 utilization pathways are considered, all associated process steps should be included in the design.

There are no specific software requirements for developing the material and energy balances or costing the capture process. However, all material and energy balance calculations must be accurate, and equilibria, physical and thermodynamic properties must be calculated using rigorous models. Similarly, mass and heat transfer models employed must be based upon a rigorous mathematical description of transport phenomena. Methods and models used must be documented in the final report for the project.

Calculated Output from Analysis:

1) Block flow diagram and accompanying stream tables similar to Exhibits 4-32 and 4-33 of the BBS.

2) Performance Summary similar to Exhibit 4-34 and 4-35 of the BBS.

3) Air Emissions tables similar to Exhibits 4-36 of the BBS. At a minimum, the table should illustrate the CO_2 reduction in tonnes/year and ppm from NGCC or industrial facility and any other emissions that would be generated by the NGCC power plant or industrial facility or balance of plant systems. Values for CO_2 removal should be presented in gross and net terms. Reminder, under AOI-3b, net should be greater than 500,000 tonnes CO2 per year.

4) Carbon, sulfur, and water balances similar to Exhibits 4-37, 4-38, and 4-39 of the BBS, if applicable. Carbon and water balances are most likely for all processes.

5) Itemized equipment list for equipment unique to the capture and compression systems and other equipment required for the integration of the capture and compressions systems with the plant.

6) Itemized capital cost estimate of the power plant with capture and compression system similar to Exhibit 4-43 and 4-44 of the BBS. The economic analysis will be performed on a December 2018 basis. Account 5 should account for capture system on any fossil-based power on plant site while account 15 should be added for all components of the capture system. Costs should be broken down by carbon capture system component and not just as one lump sum.
7) Itemized operating and maintenance cost estimate similar to Exhibit 4-45 of the BBS.

8) Cost of Capture and Cost of CO_2 Avoided should be calculated for gross CO_2 captured for the total plant, the gross CO_2 captured by the capture system and net CO_2 captured and removed from the flue gas.

9) Sensitivity analysis identifying critical CO_2 capture technology and operating parameters and their impact on overall plant performance and economics. This analysis shall include the sensitivity of COE and breakeven CO_2 sales price (or just breakeven CO_2 sales price for industrial capture) to the capital cost of the capture and compression system, as well as carbon capture cost as a function of carbon capture efficiency, for every percent efficiency point from 90% to 99%. Carbon capture in excess of 95% can be achieved either by the proposed carbon capture system or in combination with negative emissions technologies (NETs) including, but not limited to, direct air capture (DAC), bioenergy with carbon capture and storage (BECCS), and enhanced weathering.

10) Maximum carbon capture efficiency achievable with the proposed carbon capture technology and the technology pathways to achieve higher capture efficiencies and zero net carbon emissions. In addition, a cost curve starting from the optimal carbon capture rate relative to cost ($/tonne of CO_2captured) for the proposed technology up to the maximum capture rate that is at least 95% will be provided.

SOPO APPENDIX C – LIFE CYCLE ANALYSIS

A Life Cycle Analysis (LCA) is required as part of project deliverables**.**

The LCA should be conducted to demonstrate zero net carbon emissions of the electricity delivered to the consumer from the NGCC plant with carbon capture and proposed negative emissions technologies (NETs). The scope of LCA is cradle-to-delivered electricity, inclusive of transmission of the electricity to the final customer and transport and storage of the captured carbon dioxide in a saline aquifer. Note, the design of the proposed NETs should **not** be included.

LCA Guidance

1. For AOI-3B award Recipients,
    a. Required life cycle inventory data:
        i. Energy inputs to the facility including fuels and electricity
        ii. Combustion emissions at the facility
        iii. Chemical inputs to the facility
        iv. Construction of the facility and manufacturing impacts for the requiredmaterials/equipment (e.g., structural steel, concrete, etc.)
        v. Carbon dioxide transport and saline aquifer storage life cycle inventory values (gate-to-grave emissions data to be used for all projects):
            1. Carbon dioxide 1.42E-02 kg/kg CO_2 sequestered
            2. Methane 1.76E-05 kg/kg CO_2 sequestered
            3. Nitrous Oxide 1.27E-07 kg/kg CO_2 sequestered
            4. Sulfur Hexafluoride 3.74E-08 kg/kg CO_2 sequestered
        vi. Electricity transmission and distribution life cycle inventory values (gate-to-gate emissions data to be used for NGCC Power Plant life cycle modeling projects:
            1. Sulfur Hexafluoride 7.87E-05 kg/kg CO_2 sequestered
        vii. Electricity transmission and distribution electricity loss rate to be used for NGCC Power Plant life cycle modeling projects: 7%
    b. LCA results:
        i. A contribution analysis shall be provided so that impacts can be differentiated by major operation/input.
        ii. A sensitivity analysis shall be provided for key model inputs with known technical variability and/or expected variability from different site-specificcommercialization scenarios.
    c. Emissions scope:
        i. The scope of the LCA shall include, at a minimum, greenhouse gas (GHG) emissions. It is recommended that the study also include other emissions toallow for a more holistic assessment of impacts.
        ii. For GHG emissions, the global warming potential shall be reported using the 100-year global warming potential (GWP)

characterization factors as the defaultvalues from the Intergovernmental Panel on Climate Change (IPCC) Fourth Assessment Report (AR4) and the Fifth Assessment Report (AR5), sensitivity cases using the 20-year GWP values is encouraged (AR5 GWP shall be used as the default values for primary reporting):

GHG	AR4 (IPCC 2007)[17]		AR5 (IPCC 2013)[18]	
	100-year	20-year	100-year (Default)	20-year
CO_2	1	1	1	1
CH_4	25	72	36	85
N_2O	298	289	265	264
SF_6	22,800	16,300	23,500	17,500

d. Resources – NETL has tools that may be helpful in completing the LCA requirement. These tools are not exhaustive but can be used to provide some life cycle inventory data for some energy and material inputs. The following resources are recommended:
   i. General LCA guidance – NETL CO2U LCA Guidance Document
   ii. NETL Life Cycle Inventory Data – NETL CO2U openLCA LCI Database
   iii. Electricity Consumption LCI Data – NETL Grid Mix Explorer

e. LCA Submission Requirements for Final Project Deliverables
   i. LCA Report – see NETL CO2U LCA Guidance Document, Chapter 6 “Completingthe NETL CO2U LCA Report Template”
   ii. LCA Model with Life Cycle Inventory Data – see NETL CO2U LCA Guidance Document, for modeling guidance (no specific LCA software type is required)

---

17 IPCC (2007). Climate Change 2007: The Physical Science Basis. New York: Cambridge University Press:Intergovernmental Panel on Climate Change Retrieved December 16, 2020, from https://www.ipcc.ch/report/ar4/wg1/

18 IPCC. (2013). *Climate Change 2013 The Physical Science Basis*. New York: Cambridge University Press:Intergovernmental Panel on Climate Change Retrieved December 12, 2013, from https://www.ipcc.ch/report/ar5/wg1/

f. List of all licensed LCA data used within the model with external reviewer limited-license access for DOE review

2. For NGCC Power Plants
    a. System Boundary: cradle-to-delivered electricity, inclusive of transmission of the electricity to the final customer and transport and storage of the captured carbon dioxide in a saline aquifer.
    b. Reporting Metric: kg of CO_2e/MWh of electricity delivered to the customer.

SOPO APPENDIX D – BASIS FOR TECHNOLOGY EH&S RISK ASSESSMENT

An assessment of EH&S risks is required as part of the project deliverables. The final EH&S assessment shall be coordinated and consistent with the final Techno-Economic Analysis (See SOPO Appendix B for guidance).

The purpose of the EH&S activity is to assess the environmental friendliness and safety of any future process based on the materials and process being proposed under the subject DOE FOA. This is the major concern for solvents in use today. Exposure to nanoparticles is also coming under increasing scrutiny by the U.S. Environmental Protection Agency (EPA), National Institute for Occupational Safety and Health (NIOSH) and others. The EH&S risk assessments shall be conducted by qualified and experienced organizations and professionals (*e.g.*, environmental scientists, industrial hygienists, safety engineers). *Unanticipated or uncontrolled EH&S risks will impede commercialization of CO_2 capture technologies, and the EH&S assessment is a critical element of the development project.*

Required elements for the EH&S Assessment are:

1) All potential ancillary or incidental air and water emissions, and solid wastes produced from the proposed technology shall be identified and their magnitude estimated. In addition to solvents or sorbents used, researchers shall consider possible by-products of side reactions that might also occur in the system, accumulated waste products, and the fate of contaminants from the feed gas stream. Environmental degradation products shall be addressed. Bioaccumulation, soil mobility, and degradability shall be considered. Conditions at the point of discharge shall be examined.

2) If possible, a concise but complete and comprehensible description of the various toxicological effects of the substances identified in (1) above shall be provided. A thorough literature search shall be conducted to examine potential human health effects and ecotoxicity. Where information is lacking for a particular material, it shall be compared to similar substances or classes of substances.

3) Properties related to volatility, flammability, explosivity, other chemical reactivity, and corrosivity shall also be collected from existing databases or if necessary, through direct measurement in cases where the substance is not in common use.

4) The compliance and regulatory implications of the proposed technology shall be addressed with reference to applicable U.S. EH&S laws and associated standards including the Comprehensive Environmental Response and Liability Act of 1980 (CERCLA), Toxic Substances Control Act (TSCA), Clean Water Act (CWA), Clean Air Act (CAA), Superfund Amendments and Reauthorization Act (SARA) Title III, and the Occupational Safety and Health Act (OSHA).

5) An engineering analysis shall be conducted for any potentially hazardous materials identified to look for ways their use can be eliminated or minimized. Less hazardous materials should be substituted where possible. For any new materials being proposed, synthetic options shall be examined that may lead to similar, less-hazardous compounds with the required functionality. Possible engineering

controls and other mitigation strategies shall be described as appropriate.

6) Precautions for safe handling and conditions for safe storage shall be identified, including any incompatibilities with other materials that may be used in the process. Waste treatment and offsite disposal options shall be examined. Accidental release measures shall also be discussed.

SOPO APPENDIX E – ENVIRONMENTAL JUSTICE ANALYSIS

In accordance with Executive Order 13985 officially titled Advancing Racial Equity and Support for Underserved Communities Through the Federal Government, the Recipient is required to submit a preliminary summary of environmental justice considerations of the proposed technology, process, or system. The following questions should be addressed:

(1) How does the technology rely on limited resources such as coal, biomass, freshwater, land, and/or low-carbon energy? What is the relationship between the amount of resources used versus the amount of product formed?
(2) If coal is used as a feedstock, where will it be mined and what are the associated near-term and legacy environmental impacts of the coal mining, including methane leakage?
(3) How does the technology remediate legacy environmental impacts of the energy industry, including environmental impacts associated with the use of coal?
(4) If coal wastes are being remediated, what is the relationship between the amount of coal wastes used versus the amount of product formed?
(5) What is the project's waste management strategy and what are the anticipated impacts of residual waste on local residents?
(6) To what extent does the technology provide ancillary environmental benefits, such as reductions in NO_x and SO_x emissions, particulate matter, or hazardous pollutants?
(7) If the project involves a carbon capture retrofit technology, what are the potential co-benefits of the carbon capture technology (e.g., reduction of other hazardous air pollutants or reduction of other negative environmental impacts commonly associated with existing natural gas power plants or industrial processes)?
(8) How is the project incorporating a plan to ensure community and stakeholder input and engagement from underserved communities, which include persons of color; members of religious minorities; lesbian, gay, bisexual, transgender, and queer (LGBTQ+) persons; persons with disabilities; persons who live in rural areas; and persons otherwise adversely affected by persistent poverty or inequality?

SOPO APPENDIX F – ECONOMIC REVITALIZATION AND JOB CREATION OUTCOMES ANALYSIS

In accordance with Executive Order 13985 officially titled Advancing Racial Equity and Support for Underserved Communities Through the Federal Government, the award Recipient is required to submit a preliminary summary of the economic and workforce impacts associated with the proposed technology, process, or system. This includes discussion on whether application of the process will create new jobs, including clean energy jobs, at the prevailing wage and the extent to which those new jobs will be located in power plant and coal communities that are economically distressed and/or have been harmed by the adverse environmental impacts of the energy industry. The Recipient should discuss the nature of the jobs, recruitment strategies for individuals who belong to groups that are historically underserved or underrepresented, anticipated recruitment of workers from the local community, and whether training will be required, or if the skills are associated with an existing labor force. Finally, the Recipient should quantify how many new jobs will be created as a result of technology deployment (e.g., numberof jobs per unit of product, # of jobs per unit of waste remediated, number of jobs per unit of emissions mitigated).

Appendix C

Basis of Design for CCS

Company/Participant	GE	Linde	Kiewit	Southern Company
Project No.	DE-FE0032131	3710A46M		DE-FE0032131
Project Code		Bucks		
Doc. No.		&AE 0000 A-SD 1001		---
Plant Designation	Retrofittable Advanced Combined Cycle Integration for Flexible Decarbonized Generation			
Title	Basis of Design			

Page 1 of 26

IFD	Rev2	05/04/2022		J. Sholes (GE)	D. Jarmus (LEDD)	
Draft	Rev1	07/06/2022		J. Sholes (GE)	LEDD, ...	
Draft	Rev0	06/06/2022		J. Carroll (SCS)		
Status	Issue	Date	Changes	Originator	Reviewed	Approved

GE	Linde	Page
		2 of 25
Project No. Customer -- DE-FE0032131---	Project No. Linde 3710A46M	
Doc. No. -- ---	Doc. No.	Rev2

CONTENT

1	**General Information**	**4**
1.1	**General Project Description**	**4**
1.2	**Specific Objectives of the Project**	**4**
2	**Plant Design Philosophy**	**5**
2.1	**Plant Concept**	**5**
2.2	**Plant Capacity**	**5**
2.2.1	Design Margins	5
2.3	**Design Life**	**5**
2.4	**On Stream Factor**	**5**
2.5	**Redundancy**	**6**
3	**Site Conditions**	**7**
3.1	**Location**	**7**
3.2	**General Requirements**	**8**
3.3	**Layout**	**8**
3.4	**Battery Limits**	**9**
3.5	**Transport Routes to Site**	**9**
3.6	**Special Requirements due to Location**	**10**
4	**Environmental Data**	**11**
4.1	**Location**	**11**
4.2	**Temperature**	**11**
4.3	**Humidity**	**11**
4.4	**Air pressure**	**11**
4.5	**Rainfall intensity**	**12**
4.6	**Wind**	**12**
4.6.1	Codes	12
4.6.2	Wind velocity	12
4.7	**Snow**	**12**
4.8	**Earthquake**	**12**
4.8.1	Codes, general Information	12
4.9	**Soil Conditions**	**13**
4.10	**Special Conditions**	**13**
5	**Flue Gas Specification**	**14**
6	**CO2 Product Specifications and Additional Design Criteria**	**16**
7	**Utility Specifications**	**17**
7.1	**Electric Power**	**17**

GE	Linde	Page
		3 of 25
Project No. Customer -- DE-FE0032131---	Project No. Linde 3710A46M	
Doc. No. -- ---	Doc. No.	Rev2

7.2	**Steam**	**17**
7.3	**Cooling Water**	**17**
7.4	**Demineralized Water**	**18**
7.5	**Potable Water**	**18**
7.6	**Service Water**	**18**
7.7	**Fire Water**	**18**
7.8	**Instrument Air**	**18**
7.9	**Plant / Service Air**	**19**
7.10	**Nitrogen (if use instrument air instead)**	**19**
7.11	**Chemicals**	**19**
7.11.1	Sodium Hydroxide	19
7.11.2	Antifoam	19
8	**Emission and Effluents**	**20**
8.1	**Gaseous Emissions**	**20**
8.2	**Liquid Effluents**	**20**
8.3	**Steam Condensate**	**21**
8.4	**Solid Waste**	**21**
8.5	**Noise**	**21**
9	**System of Measurement**	**22**
10	**Codes and Standards**	**23**
11	**Operation Philosophy**	**24**
11.1	**Manned / Unmanned Operation Requirements**	**24**
11.2	**Accessibility Requirements for Operation and Maintenance**	**24**
12	**Abbreviations**	**25**

GE	Linde	Page
		4 of 25
Project No. Customer -- DE-FE0032131---	Project No. Linde 3710A46M	
Doc. No. -- ---	Doc. No.	Rev2

1 General Information

1.1 General Project Description

The overall goal of this project is to complete a Front-End Engineering and Design (FEED) study for integrating carbon capture with a natural gas combined cycle plant to capture at least 95% of CO_2 emissions. GE will develop concepts to integrate the combined cycle power plant with Linde's carbon capture technology. The project will also include gas and steam turbine enhancements to reduce the impact of carbon capture on the overall power plant's performance, output, and equipment cost.

The host site and basis for the study is Alabama Power's James M. Barry Electric Generating Plant in Bucks, AL. Plant Barry Unit 6 is powered by two GE 7F.04 gas turbines paired to a single steam turbine for a standard 2x1 configuration. GE will design the modifications to the existing combined cycle island. Linde will produce the design for the carbon capture island. Kiewit will design the balance of plant modifications required to support both the combined cycle modifications and carbon capture installation and roll all scopes into an overall cost and schedule estimate. Southern Company will provide an owner/operator's perspective and required host site information. Additional work is included in the overall government project in addition to the FEED itself.

1.2 Specific Objectives of the Project

The specific objectives of the project are to complete the process design optimization for the proposed site, the engineering design package, and the project cost and schedule estimation.

GE	Linde	Page
Project No. Customer -- DE-FE0032131---	Project No. Linde 3710A46M	5 of 25
Doc. No. -- ---	Doc. No.	Rev2

2 Plant Design Philosophy

2.1 Plant Concept

Plant Purpose	☐ gas supply to fixed external consumer(s) ☒ gas supply into pipeline ☐ CO_2 recovery from Slip Stream Flue Gas
Production Concept	☒ continuous, steady production according to dispatch ☐ discontinuous operation
Local Operation Concept	☒ continuous on-site operation (operator(s) on site all time) ☐ partial on-site operation (operator(s) not continuously on site, e.g. only during dayshift) ☐ locally unmanned operation (no operator(s) on site)
Remote Operation Concept	☐ no remote functions ☐ remote alarming ☒ remote monitoring with 'view only' on demand ☐ remote operation support on demand ☐ permanent remote operation
Availability Concept	☒ no special requirements ☐ autonomous backup system: ☐ special requirements

2.2 Plant Capacity

The plant will be designed to capture and compress CO_2 from the flue gas flow specified as "Design"-case in chapter 5. The design flue gas flow is provided by two gas turbines (coming out of 2 stacks). The CO_2 product flow is based on a CO_2 Capture Rate of 95%. The CO2 product will be delivered at battery limit of the PCC plant with process parameter specified in Chapter 6.

2.2.1 Design Margins

2.2.1.1 Over design philosophy

The plant will be designed to treat the flue gas flow specified as "Max"-case in chapter 5.

2.2.1.2 Turndown capacity

The Plant will be designed with a turndown capacity as according to the "Min"-Case specified in chapter 5.

2.3 Design Life

The Plant equipment and materials shall be designed for a minimum design life of 20 years.

2.4 On Stream Factor

The Plant will be designed to operate for a minimum of 311 days per annum (7446 hours/year).

GE	Linde	Page
		6 of 25
Project No. Customer -- DE-FE0032131---	Project No. Linde 3710A46M	
Doc. No. -- ---	Doc. No.	Rev2

2.5 Redundancy

Process Pumps (continuously in operation)	☒ installed spare ☐ spare in stock (impeller only) ☐ no spare
Loading pump, Tank pumps, Pit pump (discontinuously in operation)	☐ installed spare ☒ spare in stock (spares are needed only for pit pump and tank pump) ☐ no spare
CO2 compressor	☐ installed spare ☒ spare parts in stock ☐ no spare (to be confirmed)
Flue Gas Blower	☐ installed spare ☐ spare in stock ☒ no spare (to be confirmed based on lead time for blower motor and impeller)

GE	Linde	Page
		7 of 25
Project No. Customer -- DE-FE0032131---	Project No. Linde 3710A46M	
Doc. No. -- ---	Doc. No.	Rev2

3 Site Conditions

3.1 Location

Plant Barry is located in Bucks, AL (USA).
Address: 15300 US-43, Bucks, AL 36512

The following map provides a general location of the plant:

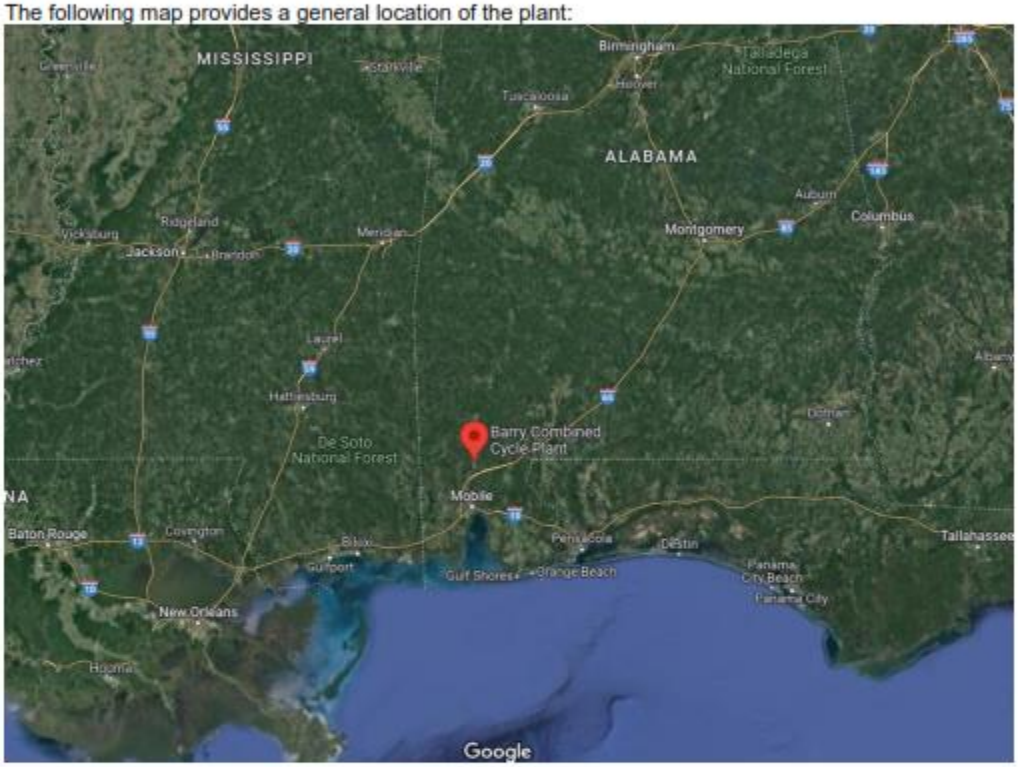

The following shows the layout of the combined cycle facilities and potential areas for carbon capture construction:

GE	Linde	Page
Project No. Customer -- DE-FE0032131---	Project No. Linde 3710A46M	8 of 25
Doc. No. -- ---	Doc. No.	Rev2

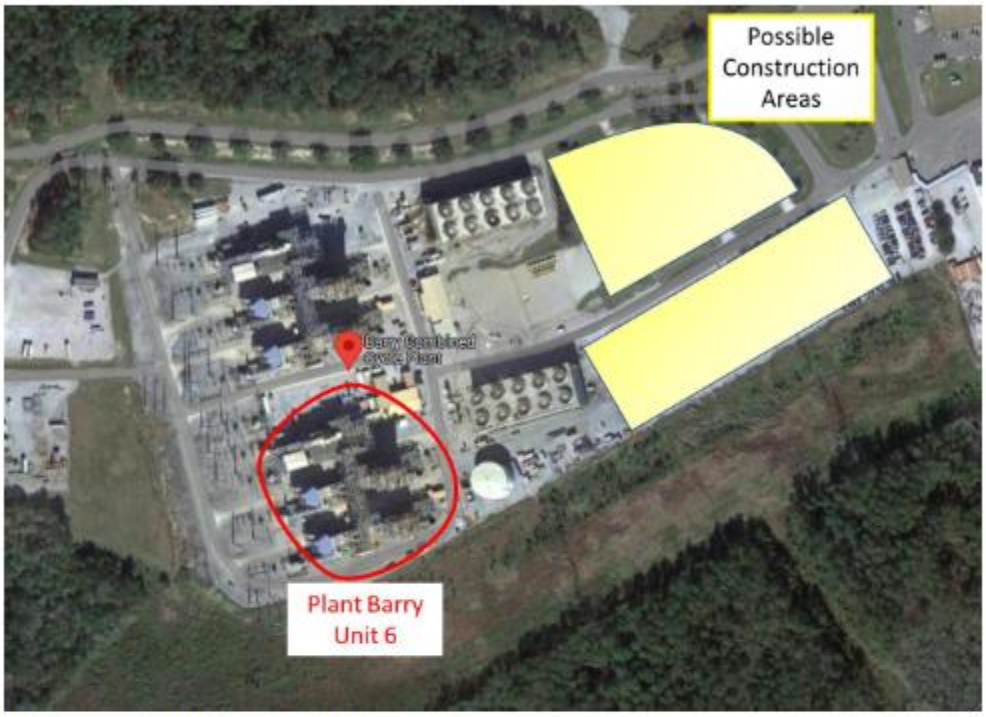

3.2 General Requirements

General layout conditions	☐ plant built from grassroots (no special requirements) ☒ plant to be integrated in surrounding layout of power plant ☐ plant layout similar/ identical to				
Layout details	According to plant layout drawing				
Arrangement of equipment and machinery	new building	exist. building	container	shelter	outside
- CO_2 Capture Plant (PCC)	☐	☐	☐	☐	☒
- pumps and compressors	☐	☐	☐	☐	☒
- low voltage electrical equipment	☐	☐	☒	-	-
- process control system	☐	☐	☒	-	-
- analytical equipment	☐	☐	☒	-	-
- operator workplace (control room)	☒ (1)	☐	☐	-	-
- sanitary facilities	☒	☐	☐	-	-
Access and passage for maintenance	☒ standard	☐ extended	☐ maximized		
General US norms and standards shall be considered (e.g.OSHA), however no other specific norms and standards (like from SCS) must get considered.					

Note: (1) Control room should include a "safe room" per Federal Emergency Management Agency (FEMA) criteria for extreme weather events.

3.3 Layout

To be developed during the project execution

GE	Linde	Page
		9 of 25
Project No. Customer -- DE-FE0032131---	Project No. Linde 3710A46M	
Doc. No. -- ---	Doc. No.	Rev2

3.4 Battery Limits

The battery limit for feed, products, utilities, electrical, instrumentation and effluents of the plant shall be within the battery limit of the PCC plant.

Feed and products

Flue gas from duct	Take over point at plant battery limit on the pipe rack
Carbon Dioxide (CO2)	Take over point at plant battery limit on the pipe rack

Utilities

Steam	Take over point at plant battery limit on the pipe rack
Steam condensate	Take over point at plant battery limit on the pipe rack
Cooling water supply/return	Take over point at plant battery limit on the pipe rack
Demin water	Take over point at plant battery limit on the pipe rack
Potable water	Take over point at plant battery limit on the pipe rack
Service water	Take over point at plant battery limit on the pipe rack
Fire water	Take over point at plant battery limit on the pipe rack
Instrument Air	Take over point at plant battery limit on the pipe rack
Plant Air	Take over point at plant battery limit on the pipe rack
Nitrogen	not available
Electrical Power	Take over point at plant battery limit

Emissions/Wastewater/Chemicals

Treated flue gas	To atmosphere
Process condensate return	Take over point at plant battery limit on the pipe rack
Safety valve outlets	To atmosphere
Emissions due to upset plant conditions / start-up / shut-down	To atmosphere
Regeneration gas	To atmosphere
Wastewater	Take over point at plant battery limit on the pipe rack
Chemicals, solvent	Truck loading/unloading station

3.5 Transport Routes to Site

Access to site for cars, trucks and construction vehicles is foreseen and possible over the following roads at any time:

- Alabama state highway – AL 43

The above access roads are suitable for vehicles up to the following dimensions:

Maximums without Permit	Unit	design data
maximum width	ft	8.5
maximum height	ft	13.5
maximum overall length	ft	99
maximum overall weight	lbs (ston)	80,000 (40) Gross Vehicle Weight, 20,000 (10) Single Axle; 34,000 (17) Tanem Axle; 42,000 (21)Tridem Axle

Note that large plant equipment (columns, tanks, vessels, compressors) may be larger than above and are expected to require special transportation permits. For large and heavy transports, a detailed transport study needs to be performed case by case. This transport study is expected to be done by the EPC partner.
However, plant design will assume that PCC will be a 'one train concept' (one train (DCC, Absorber..) per one gas turbine).

GE	Linde	Page
		10 of 25
Project No. Customer -- DE-FE0032131---	Project No. Linde 3710A46M	
Doc. No. -- ---	Doc. No.	Rev2



The site has barge access for coal deliveries and was able to receive a previous coal-based carbon capture demonstration via barge. The typical road route is shown above in dark blue.

3.6 Special Requirements due to Location

The location of the plant is within an industrial environment. Special requirements such as safety distances, noise limits, maximum height of buildings/equipment, emissions, firefighting requirements, rainwater handling, etc. have to be defined by power plant and agreed with local authorities.

There are no known special requirements for the Plant Barry site.

GE	Linde	Page
		11 of 25
Project No. Customer -- DE-FE0032131---	Project No. Linde 3710A46M	
Doc. No. -- ---	Doc. No.	Rev2

4 Environmental Data

4.1 Location

Country, place	USA, Alabama, Bucks
height above sea level (ft)	Approx. 23 ft
distance to coastline	Approx. 25 miles
latitude	31°0'22"N
longitude	88°0'40"W

4.2 Temperature

Maximum Design Ambient Temperature (deg F)	105
Minimum Design Ambient Temperature (deg F)	0

U.S. Department of Commerce
National Oceanic & Atmospheric Administration
National Environmental Satellite, Data, and Information Service
Current Location: Elev: 215 ft, Lat: 30.6883° N Lon: -88.2456° W
Station: **MOBILE REGIONAL AIRPORT, AL US USW00013894**

Summary of Monthly Normals
1981-2010
Generated on 06/09/2022

National Centers for Environmental Information
151 Patton Avenue
Asheville, North Carolina 28801

Temperature (°F)

	Mean						Cooling Degree Days Base (above)						Heating Degree Days Base (above)				Mean Number of Days					
Month	Daily Max	Daily Min	Mean	Long Term Max Std Dev	Long Term Min Std Dev	Long Term Avg Std Dev	55	57	60	65	70	72	55	57	60	65	Max >= 100	Max >= 90	Max <= 53	Max <= 32	Min <= 32	Min <= 0
01	60.8	40.9	50.4	3.4	4.1	3.8	63	45	25	7	1	-7777	205	350	523	859	0.0	0.0	26.8	0.1	7.7	0.0
02	64.4	43.3	53.8	2.9	3.3	2.9	83	60	34	9	1	-7777	115	148	206	321	0.0	0.0	26.1	-7777	3.9	0.0
03	71.2	49.1	60.2	2.6	3.3	2.9	204	161	105	39	8	3	45	93	106	189	0.0	0.0	30.6	0.0	1.1	0.0
04	77.5	58.4	68.4	2.4	2.7	2.4	349	293	214	104	32	10	5	9	21	68	0.0	0.1	30.0	0.0	-7777	0.0
05	84.5	67.7	76.1	1.6	2.4	1.7	562	500	427	286	149	101	-7777	-7777	-7777	4	0.0	3.6	31.0	0.0	0.0	0.0
06	89.2	73.4	79.8	1.9	1.5	1.4	744	684	584	444	294	216	0	0	0	-7777	0.2	13.9	30.0	0.0	0.0	0.0
07	91.0	72.7	81.8	1.5	1.0	1.1	832	770	677	522	367	305	0	0	0	0	0.2	20.9	31.0	0.0	0.0	0.0
08	90.7	72.8	81.6	2.0	1.3	1.5	826	764	671	516	361	299	0	0	0	0	0.2	19.5	31.0	0.0	0.0	0.0
09	87.0	68.9	77.5	1.7	2.1	1.8	678	615	525	377	235	181	-7777	-7777	-7777	2	0.0	8.0	30.0	0.0	0.0	0.0
10	79.2	57.8	68.4	1.7	3.5	2.3	428	361	278	158	66	43	5	8	17	53	0.0	0.5	31.0	0.0	-7777	0.0
11	70.6	48.4	59.6	3.0	3.8	3.1	196	151	100	41	10	5	62	73	112	208	0.0	0.0	29.8	0.0	1.5	0.0
12	62.7	42.2	52.4	3.6	4.3	3.8	82	70	43	15	3	1	171	211	277	404	0.0	0.0	28.0	0.1	5.8	0.0
Summary	77.4	57.9	67.2	2.4	2.8	2.4	5070	4564	3700	2518	1528	1169	598	762	1050	1695	0.6	65.1	360.3	0.2	29.0	0.0

-7777: a non-zero value that would round to zero
Empty or blank cells indicate data is missing or insufficient occurrences to compute value

Above data sourced from:

https://www.ncdc.noaa.gov/cdo-web/datasets/NORMAL_MLY/stations/GHCND:USW00013894/detail

4.3 Humidity

Design Relative Humidity 75%.

4.4 Air pressure

Ambient Air Pressure 14.7 psia

GE	Linde	Page
		12 of 25
Project No. Customer -- DE-FE0032131---	Project No. Linde 3710A46M	
Doc. No. -- ---	Doc. No.	Rev2

4.5 Rainfall intensity

maximal	average	Comments
18.3 in per 24 hours	14.0 in per 24 hours	Information on rainfall from NOAA for Mobile County, AL, USA for 100-yr flood

(https://hdsc.nws.noaa.gov/hdsc/pfds/pfds_map_cont.html?bkmrk=al)

4.6 Wind

4.6.1 Codes

	Code	Comments
building / structural steel	ASCE 7-16/IBC 2018	Load actions on building structures
tanks, silos	ASCE 7-16/IBC 2018 API 600, API 620, API 650	Loads of vertical vessels due to wind and seismic effects
vessels, apparatus, pipes	ASCE 7-16/IBC 2018 ASME BPVC SECTION VIII, ASME B31.1, ASME B31.3	Loads of vertical vessels due to wind and seismic effects
columns	ASCE 7-16/IBC 2018	Loads of vertical vessels due to wind and seismic effects

4.6.2 Wind velocity

maximal (miles/h)	average (miles /h)	Comments
172 mph		Exposure C (Wind-borne debris region)

4.7 Snow

Ground Snow design loading (according to ASCE 7-16/IBC 2018): 0 PSF

4.8 Earthquake

4.8.1 Codes, general Information

ASCE 7-10/IBC 2012
Risk Category III
Site Class D
Ss = 0.095 g
S1 = 0.059 g
SDC: B SEISMIC DESIGN CATEGORY

	Code	Comments
Building / structural steel / civil	American Standard	

	IBC, ACI, ASCE, AWS, ASTM, PIP, AISC, Linde Standard ASCE 7-16/IBC 2018	Load act on building structures.
Tall, vertical vessels	ASCE 7-16/IBC 2018, API 620	Loads of vertical vessels due to wind and seismic effects
Machinery, vessels, pipes	ASCE 7-16/IBC 2018, ASTM BPVC, ASME B31.1, ASME B31.3	Loads of vertical vessels due to wind and seismic effects

4.9 Soil Conditions

Soil default design value per IBC 2018/ASCE 7-16 or site-specific geotechnical soil report.

4.10 Special Conditions

Corrosive Atmosphere		
	NH_3 – atm.	No
	Sea water	No
Sandstorm		No
Coal dust		No
Others		xxx

GE	Linde	Page
		14 of 25
Project No. Customer -- DE-FE0032131---	Project No. Linde 3710A46M	
Doc. No. -- ---	Doc. No.	Rev2

5 Flue Gas Specification (based on Tech down-select Option 3)

The Flue Gas will be transferred via ducts from each HRSG to the inlet of each DCC column. The separate ducts will connect to a manifold at the inlet to the DCCs to allow the flexibility of operating either PCC plant during turndown or 1 train operation. The design conditions and location will be determined in the B.L.-list. Because of the closed stack design, no air ingress should be included in the CCS design. The flue gas parameters fed to the PCC Plant are as follow:

		Max	Design	Min
Ambient	°F	95	65	95
Combustion Turbines Operating	1 / 2	2	2	1
Duct Burner Status	On / Off	Off	Off	Off
Exhaust Gas Recirc Status	On / Off	On	On	On
Combustion Turbine Load	%	99%	97%	50%
Combustion Turbine Steam Inj	On / Off	Off	Off	Off
Total Mass Flow (to CCS)	Total kpph	4,920	4.920	1,577
HRSG Exit Temp	°F	231.8	223.6	~210
Current Stack Exit Pressure	psia	14.7	14.7	14.7
Anticipated DCC Inlet Pressure	psia	14.34	14.34	14.52
Stack Constituents				
Molecular Weight	lb/lbmole	27.55	27.45	27.20
N2	Mol %	76.19%	75.45%	75.18%
O2	Mol %	6.51%	6.51%	6.91%
CO2	Mol %	7.13%	7.03%	6.21%
H2O	Mol %	9.26%	10.11%	10.80%
Ar	Mol %	0.91%	0.90%	0.89%
GT Exhaust Emissions (Total)				
NOx	ppmvd	9	9	9
NOx Correction O2 Value	% O2	15	15	15
NOx as NO2	lb/hr	143.4	144.4	41.2
NH3	ppmvd			
CO	ppmvd	9	9	9
CO	lb/hr	66.8	66.4	21.2
Unburned Hydrocarbon (UHC)	ppmvw	7	7	7
UHC (dry)	lb/hr	29.6	29.6	9.4
VOC	ppmvw	1.4	1.4	1.4
VOC (dry)	lb/hr	6.0	5.9	1.9
Particulate Emissions	US-Filt lbm/hr	4.1	4.1	4.1
Particulate Emissions	US-Totl lbm/hr	8.2	8.2	8.2
Total CO2 Mass Flow	lb/hr	559,659	555,480	158,677
	ton/hr	279.8	277.7	79.3
	ton/day	6,716	6,666	1,904

Notes:

GE	Linde	Page
		15 of 25
Project No. Customer -- DE-FE0032131---	Project No. Linde 3710A46M	
Doc. No. -- ---	Doc. No.	Rev2

1) Performance estimated not guaranteed.
2) Performance is new and clean without any effects for degradation.
3) Performance at 25F assumes full CT Load.

The values as per design case will be used for dimensioning of the new PCC plant. In addition, for flue gas cooling the high water content of the case 'Max/95°F' will be considered.

GE	Linde	Page
		16 of 25
Project No. Customer -- DE-FE0032131---	Project No. Linde 3710A46M	
Doc. No. -- ---	Doc. No.	Rev2

6 CO_2 Product Specifications and Additional Design Criteria

The captured CO_2 flow has to meet the following conditions at the battery limit point:

Description	Unit	DESIGN CASE
Pressure	psig (barg)	2,200 psi
Temperature	°F; (°C)	<120
Composition (Dry)		
CO_2	Vol%	≥ 97%
Total Hydrocarbon	Vol %	< 4%
N_2 and Argon	Vol %	< 0.5%
H_2O	lbs/MMSCF	45
O_2	ppmv	10
H_2S	ppmv	<10
Total Sulphur	ppmv	<30
Any others to be defined by client		

GE	Linde	Page
		17 of 25
Project No. Customer -- DE-FE0032131---	Project No. Linde 3710A46M	
Doc. No. -- ---	Doc. No.	Rev2

7 Utility Specifications

7.1 Electric Power

Electrical power will be provided to the facility at the conditions shown in the table below.

AC Power

Voltage	Phase	Frequency
34.5 kVAC	3 phase	60 Hz
or		
13.8 kVAC	3 phase	60 Hz

Linde will use this feed-in to make at a new sub-station the voltage levels that will be needed for the system inside PCC.

The existing AC and DC station service infrastructure is insufficient for the station service required for carbon capture and compression. Thus, new station service infrastructure will have to be derived from one or more 230kV tie-in points.

7.2 Steam

Reboiler Steam Conditions for Design Case (at battery limit).). This may be updated as piping within ISBL and location of battery limit are finalized. If so, this document will be updated.

Case		Design
Steam from Crossover / HRSG LP section		
Temperature	°F	20°F superheated
Pressure	psia	54.6

7.3 Cooling Water

Cooling Water is provided at battery limit of the PCC plant.

Parameter	Design Case
Current Availability (yes/no)	No – New Tower Required
Assumed CW Supply Temperature (deg F)	86 °F supply
Required CW Supply Pressure (psia)	by contractor
CW Return Temperature (deg F)	104 °F
Required CW Return Pressure (psia)	35 psia at boundary limit
Water Quality	Linde Standard LS 931 02 provides orientation for water quality requirements. The information from current water analysis allows a maximum of 3 Cycle of Concentration (COC) to use material SS 304 (CrNi 18-8) for cooling water system. (permissible level 50 mg Cl^- / liter according to LS 931-02)

GE	Linde	Page
		16 of 25
Project No. Customer -- DE-FE0032131---	Project No. Linde 3710A46M	
Doc. No. -- ---	Doc. No.	Rev2

7.4 Demineralized Water

Demineralized Water is supplied at battery limit at following operating conditions:

Availability (yes/no)	Yes
Sodium (ppb molar)	< 2.0
Chloride (ppb molar)	< 2.0
Sulfate (ppb molar)	< 2.0
Reactive Silica (ppb molar)	< 10
TOC (ppb molar)	< 100
Dissolved solids (ppb molar)	No data
Conductivity (µS/cm)	< 0.1
Temperature (deg F)	~ Ambient
Available Pressure (psia)	95

7.5 Potable Water

Potable water is supplied at battery limit and will be used for safety showers and eye wash stations. The operating conditions are the following:

		min.	norm.	max.
Pressure	psig (barg)		106	
Temperature	°F (°C)	50	60-80	90

7.6 Service Water

Service Water is available at battery limit of the PCC plant with the following process parameter:

		min.	norm.	max.
Pressure	psig (barg)	60	80	95
Temperature	°F (°C)	75	90	100

7.7 Fire Water

Fire Water is available at battery limit of the PCC plant with the following process parameter: Instead, Potable water will be used.

		min.	norm.	max.
Pressure	psig (barg)		185	
Temperature	°F (°C)	50	60-80	90

7.8 Instrument Air

Instrument Air is available at Battery Limit of the PCC plant with the following process parameter:

GE	Linde	Page
		19 of 25
Project No. Customer -- DE-FE0032131---	Project No. Linde 3710A46M	
Doc. No. -- ---	Doc. No.	Rev2

		min.	norm.	max.
Pressure	psig (barg)	80	90	100
Temperature	°F (°C)		80	
Dew point	°F (°C)	-40°F	-40°F	-40°F

7.9 Plant / Service Air

Plant / Service Air is available at battery limit of the PCC plant with the following parameter:

		min.	norm.	max.
Pressure	psig (barg)	80	90	100
Temperature	°F (°C)		80	

7.10 Nitrogen (if use instrument air instead)

Nitrogen is not available for the PCC plant.

7.11 Chemicals

7.11.1 Sodium Hydroxide

Sodium Hydroxide (NaOH) is not available for the use in the PCC plant. Hence, the PCC plant has be equipped with its own NaOH storage and supply unit.

7.11.2 Antifoam

Antifoam will be required in small quantities in the amine wash loop via the antifoam dosing unit.
It will be delivered in small trading units. Type and amount will be clarified during Basic Engineering.

GE	Linde	Page
		20 of 25
Project No. Customer -- DE-FE0032131---	Project No. Linde 3710A46M	
Doc. No. -- ---	Doc. No.	Rev2

8 Emission and Effluents

8.1 Gaseous Emissions

Treated flue gas will be routed to atmosphere downstream of each absorber. Local emission limits must be considered.

The limits below are permit limits based on original construction permit/design. If changes are made that impact how the unit operates, emission rates, etc., it will be necessary to look at emissions from 5 years prior to construction of the project and work with the state department of environmental quality to develop new permit limits.
Permit limits for parameters decreased or unaffected by the PCC process would be expected to stay the same as shown below. Parameters increased by the PCC process will have to be evaluated with the state environmental office to determine new permit limits. The emission values from the PCC plant will need to be communicated to the local authorities. They will compare that to the best available control technology to determine the permit limit.
In addition to NOx, CO, VOC, and PM that are listed in the current facility permit, the impact of adding carbon capture on additional criteria pollutants such as SO2, PM10, PM2.5, and GHG will be evaluated.

Plant Barry Unit 6	Per CT	
NOx	0.013 lb/mmBtu; not to exceed 27.7 lb/hr; equates to a BACT limit of 3.5 ppm @15% O_2	CEMS monitor is used for monitoring NOx on a rolling 3-hour average for 40 CFR Part (Acid Rain Program) and used for demonstrating compliance for 40 CFR 60
CO	0.06 lb/mmBtu, not to exceed 127 lb/hr 15 ppm (@ 17.6% O2)	Compliance is determined by EPA Test method 10 of App A in 40 CFR 60; biennial stack test
Particulate matter and PM_{10}, **filterable** only (PM)	0.011 lb/mmBtu, not to exceed 22.4 lb/hr	Compliance is determined by EPA Test method 5 or 17 of App A in 40 CFR 60; biennial stack test
VOC note: these values are for information only	0.015 lb/mmBtu not to exceed 31.8 lbs/hr 7 ppm (@ 17.4% O2)	Compliance is determined by EPA Test method 25, 25A or 25B of App A in 40 CFR 60: biennial stack test
NH3	No permit limit for NH3 slip	NA

8.2 Liquid Effluents

Disposal methods for all liquid effluents must be specified (wastewater treatment plant).

The principle process parameter of liquid effluents at battery limit of the PCC plant are the following:

		min.	norm.	max.
Pressure	psig (barg)	tbd	tbd	tbd
Temperature (if any restrictions)	°F (°C)	tbd	tbd	tbd

GE	Linde	Page
		21 of 25
Project No. Customer -- DE-FE0032131---	Project No. Linde 3710A46M	
Doc. No. -- ---	Doc. No.	Rev2

8.3 Steam Condensate

Steam Condensate will be returned to battery limit at the following operating pressure:

		min.	norm.	max.
Pressure	psig (barg)	100	125	150

8.4 Solid Waste

Disposal ways for all solid waste must be specified.

8.5 Noise

Basis of acoustic design (for normal operation)	☒ no special requirements (Linde Engineering standard, acoustic design in compliance with local regulations [1]) ☐ sound pressure level at plant boundaries max. dB(A) ☐ sound pressure level at certain spots outside plant boundaries ☐ German "TA Lärm" ☐ 85 dB(A) in 1 m outside buildings ☐ 90 dB(A) acc. to OSHA ☐ other:
Comments:	[1] Both OSHA and NIOSH have time weighted average exposure limits 90 and 85 dBA respectively. If above 85 dBA at 3 feet (1 m), the area will have to be designated for hearing protection

GE	Linde	Page
		22 of 25
Project No. Customer -- DE-FE0032131---	Project No. Linde 3710A46M	
Doc. No. -- ---	Doc. No.	Rev2

9 System of Measurement

For the execution of the project the following US system will be used, (or) with the following units:

Parameters	Project units
Temperature	°F
Pressure	psia, psig
Vacuum	psia
Weight	lbs
Volume	ft^3
Liquid Mass flow	lb/h
Liquid Volume flow	US gal/min
Gas Mass flow	lb/h
Gas Volume flow	scfm
Density	lb/ft^3
Enthalpy	btu/lb
Heat duty/Power	(Btu/h) (hp)
Heat duty	mmBtu/h (=million Btu/h)
Thermal conductivity	Btu/ft.°F
Transfer rate	$Btu/h.ft^2.F$
Fouling resistance	$ft^2.°F.h/Btu$
Viscosity	cP
Equipment size	in
Pipe length	feet
Pipe diameter	in
Vessel nozzle sizes	in
Distance/length – Structural/Civil	ft, in
Area – Structural/Civil	ft^2

Conditions for gas measurement	Pressure	Temperature
Normal	29.9 in Hg	32°F

GE	Linde	Page
		23 of 25
Project No. Customer -- DE-FE0032131---	Project No. Linde 3710A46M	
Doc. No. -- ---	Doc. No.	Rev2

10 Codes and Standards

Overall Standard and Design Code Requirements					
European			USA		Other
Within Europe	UK	O/S Europe	Within USA	O/S USA	(Specify)
☐	☐	☐	☒	☐	☐
Special or Local Requirements are to be noted below					
Linde Engineering standard					
CE Marking					
PED 97/23/EC					
ATEX					
IEC					
actual codes and standards valid at the time of LOI					

Identification / Numbering System	LE Standard	Special Requirement	Specifications / Remarks
Process Equipment	☒	☐	
Electrical Equipment	☒	☐	
Instrumentation & Control	☒	☐	
Piping	☒	☐	
Documentation	☒	☐	

Others	
Language (design and operating information)	☒ English ☐ German ☐ Other (specify)

Note:
Beside the codes mentioned under item 4.6 and 4.8, no other API standards shall apply. Use of specific customers standards shall be specifically discussed and agreed.
However, only for sizing and installation of safety valves the API standards API 520 & API 521 shall apply.

GE	Linde	Page
		24 of 25
Project No. Customer -- DE-FE0032131---	Project No. Linde 3710A46M	
Doc. No. -- ---	Doc. No.	Rev2

11 Operation Philosophy

11.1 Manned / Unmanned Operation Requirements

The Plant shall be designed for automatic operation. Operation shall be possible from a carbon capture control room (CCCR). It is anticipated that initial plant operation will be performed from the CCCR.
Under stable feed and load conditions the Plant can normally operate automatically and with minimum panel operator intervention (in CCCR).
Nevertheless, continuous supervision by a panel operator shall be ensured at all times. Panel operator intervention will typically be required for situations like load changes or variable feed gas conditions (to be reviewed, e.g. adjustment of set points for transition from holding mode to ship loading mode), for start-up and troubleshooting additional field operator intervention will be required.
A field operator will need to attend to routine inspection, maintenance activities, and any batch sampling required.
Full remote operations capability must not be designed into plant. A remote support with 'view only' on demand shall be foreseen.

11.2 Accessibility Requirements for Operation and Maintenance

Layout of equipment, piping and structures will be arranged to allow accessibility for normal operations and maintenance.

Temporary Access
Temporary access is defined as free access to plant components, which can be operated and maintained via mobile devices (ladder, mobile platform, lifting devices) or scaffolding.
It is adequate in general, where intervention is required infrequently or unlikely.

Permanent Access
Permanent access is defined as free and unobstructed access to plant components, which can be operated and maintained from grade or permanent installed platform, stair or ladder.

Permanent access is required in general:

- where operator intervention is required once per 12 hours shift, e.g. observation or adjustment during normal Plant operation or for normal plant start-up or shut-down
- where a sudden need of intervention is required to avoid a plant shut down or breakdown, e.g. block valve on redundant reboiler or pump in stand-by mode.
- to manually operated firefighting equipment
- to hand wheel of isolation valves at battery limit

Roads and Walkways
Plant access roads will be sized for passage of the most spacious temporary access or lifting equipment required to maintain components in the area, the access road is leading towards.
Areas which will only require infrequent vehicle access, e.g. for major maintenance or for fire brigade access, may not be accessible via dedicated road but only via an access corridor of adequate dimensions and trafficable surface, e.g. gravel.
In areas where mobile cranes are required for maintenance activities, adequate space for crane set-up (counterweight, posts, etc.) will be considered.
Walkways will be free of obstructions. Walking and working surfaces will be designed to avoid slippery conditions and tripping hazards.

GE	Linde	Page
		25 of 25
Project No. Customer -- DE-FE0032131---	Project No. Linde 3710A46M	
Doc. No. -- ---	Doc. No.	Rev2

12 Abbreviations

SCS	Southern Company Services
FEED	Front-End Engineering and Design
NGCC	natural gas fired combined cycle
CCCR	Carbon Capture Control Room
MTPD	Metric Tons Per Day
PCC	Post Combustion Capture
STPD	Short Tons Per Day
IBC	International Building Code
ACI	American Concrete Institute
ASCE	American Society of Civil Engineers
AWS	American Welding Society
ASTM	American Society for Testing and Materials
AISC	American Institute of Steel Construction
PIP	Process Industry Practices

Appendix D

GT Fuel Analysis

This space intentionally left blank

Appendix E

Additional Heat Balance Stream Data for Table 12

Heat Balance Stream Data

The following table provides steam cycle data for the final NGCC + CCS configuration for five ambient conditions.

				7F.04-200Tech, CCS ON & 40%EGR				
Stream Name	HB Stream Number	Parameter	Units	25F	40F	59F EC ON	65F EC ON	95F EC ON
HP Throttle	Stream 34	HP Steam Inlet Flow	lb/h	1036725	1035706	1034431	1034879	1035644
		HP Steam Inlet Pressure	psia	1849	1853	1852	1853	1857
		HP Steam Inlet Temperature	°F	1013	1020	1022	1022	1025
HP Bowl	---	HP Steam Bowl Flow	lb/h	1036725	1035706	1034431	1034879	1035644
		HP Steam Bowl Pressure	psia	1833	1837	1836	1837	1841
		HP Steam Bowl Temperature	°F	1012	1019	1021	1021	1024
HP Exit	Stream 35 @ ST	HP Steampath Exit Flow	lb/h	1008959	1007967	1006729	1007162	1007914
		HP Steampath Exit Pressure	psia	469	470	471	470	473
		HP Steampath Exit Temperature	°F	658	663	665	665	668
Cold Reheat	Stream 35 @ HRSG	Cold Reheat Flow	lb/h	1000920	999936	998695	999141	999862
		Cold Reheat Pressure	psia	466	467	468	467	470
		Cold Reheat Temperature	°F	657	663	665	665	668
Hot Reheat	Stream 36	Hot Reheat Flow	lb/h	1115699	1113917	1114198	1111657	1118026
		Hot Reheat Pressure	psia	439	440	440	440	442
		Hot Reheat Temperature	°F	1034	1044	1048	1049	1050
IP Bowl	---	IP Steam Bowl Flow	lb/h	1143465	1141655	1141900	1139375	1145756
		IP Steam Bowl Pressure	psia	436	436	437	436	439
		IP Steam Bowl Temperature	°F	1031	1041	1045	1046	1047
IP Exit	Stream 37	IP Steam Exit Flow	lb/h	1136306	1134523	1134777	1132256	1138634
		IP Steam Exit Pressure	psia	72.5	72.5	72.5	72.5	72.5
		IP Steam Exit Temperature	°F	575	583	585	587	586
XO Butterfly Valve	---	Butterfly Valve %DP	-	0.424	0.393	0.366	0.358	0.338
		Butterfly Valve DP	psi	30.7	28.4	26.5	25.9	24.4
LP Bowl	Stream 40	LP Steam Inlet Flow	lb/h	715401	751615	783104	792640	818137
		LP Steam Inlet Pressure	psia	41.4	43.7	45.6	46.1	47.6
		LP Steam Inlet Temperature	°F	571	579	582	583	582
LP Exhaust	Stream 41	LP Steam Outlet Flow	lb/h	716590	752799	784286	793822	819319
		LP Steam Outlet Pressure	psia	0.31	0.39	0.55	0.62	0.91
		LP Steam Outlet Temperature	°F	65	72	83	86	98
Condenser	Stream 44	Condenser Duty	Btu/h	742261478	773886623	781470124	789282531	813074763
		Condenser Exit Pressure	psia	0.31	0.39	0.55	0.62	0.91
		Condenser Exit Temperature	°F	65	72	83	86	98
CCS Extraction	Stream 21	CCS Extraction Flow	lb/h	623904	623791	617676	613603	604161
		CCS Extraction Pressure	psia	72.5	72.5	72.5	72.5	72.5
		CCS Extraction Temperature	°F	330	330	330	330	330
		CCS Extraction Energy	Btu/h	745,528,325	745,393,534	738,086,408	733,219,530	721,937,548
CCS Spray	---	CCS Spray Flow	lb/h	55053	52633	50355	49603	47756
		CCS Spray Pressure	psia	250	250	250	250	250
		CCS Spray Temperature	°F	67	75	85	88	101
LP Admission Steam	Stream 39	LP Admission Steam Flow	lb/h	118288	121594	128989	132738	132229
		LP Admission Steam Pressure	psia	72.5	72.5	72.5	72.5	72.5
		LP Admission Steam Temperature	°F	505	502	499	498	498
ST Supply to CCS Extraction	Stream 38	ST Supply to CCS Extraction Flow	lb/h	427563	389564	358332	346263	327176
		ST Supply to CCS Extraction Pressure	psia	72.5	72.5	72.5	72.5	72.5
		ST Supply to CCS Extraction Temperature	°F	576	583	585	587	586
Throttle CCS Extraction	Stream 33	CCS Extraction Flow	lb/h	23000	60000	80000	85000	97000
		CCS Extraction Pressure	psia	72.5	72.5	72.5	72.5	72.5
		CCS Extraction Temperature	°F	330	330	330	330	330
		CCS Extraction Energy	Btu/h	27,483,652	71,696,482	95,595,310	101,570,017	115,909,313

Assumptions

1. GT configuration is 7F.04-200Tech.
2. EGR ON, 40%GT recirculation. Delta EGR inlet temp to ambient WB is constant 22F across ambient range.
3. Constant 2.7GJ steam energy per tonne of CO2. Steam extraction at 5 Bara.

4. ST HP and IP swallowing capacity increased by 15%. ST Mechanical feasibility has NOT been verified.
5. As required, HP throttle steam bypassed directly to CCS to maintain pressure within design limits. Bypassed steam attemperated as needed.
6. As required, cooling tower fans reduced to maintain condensate enthalpy to allow LP drum to generate minimal steam.

Appendix F

EGR Viability Assessment

Notes:

(1) Page F-4 – The 5th paragraph should state: "The impact of EGR to the LCOE is -$1.31 and the impact to break-even CO_2 sales price is -$1.96 which represents a reduction of nearly 1.6% on LCE and 2.7% on breakeven CO_2 sales price." See Section 2.2.1 of this report.

(2) Page F-5 – EGR layout has been updated. Latest version is available in Section 2.5 of this report.

Retrofittable Advanced Combined Cycle Integration for Flexible Decarbonized Generation

Deliverable –

SOPO 2.2.1 "EGR Viability Assessment (go-no-go)"

DE-FE-0032131

John Sholes (GEGP) **Principal Investigator**

Joe Weber (GEGP) **External Project Manager**

June 10, 2022

Revised Aug 22, 2022

Revision Notes:

Aug 22, 2022:

- **Updated EGR PFDs (pages 4 and 5) to be clearer when expanded**
- **Added table of acronyms used**
- **Added labels to EGR layout diagram on page 4**
- **Added LOCE and Break Even CO_2 Sales Price values**

Acronyms:

CapEx – Capital Expense
CEMS – Continuous Emissions Monitoring System
CCP – Carbon Capture Plant
CCPP – Combined Cycle Power Plant
CCS – Carbon Capture System
CCW – Cooled Cooling Water
CW – Cooling Water
DCC – Direct Contact Cooler
DLN – Dry Low NOx (combustor)
EGR – Exhaust Gas Recirculation
FEED – Front End Engineering Design
GE – General Electric
GEGP – General Electric Gas Power
GT – Gas Turbine
GTP – Gas Turbine Performance
HHV – Higher Heating Value
HRSG – Heat Recovery Steam Generator
IBH – Inlet Bleed Heat (GT)
ISBL – InSide Battery Limits
LCA – Life Cycle Analysis
LCOE – Levelized Cost of Electricity ($/MW-hr)
NGCC – Natural Gas Combined Cycle
NPV – Net Present Value
OBB – Over Board Bleed (GT)
OSBL – OutSide Battery Limits
PFD – Process Flow Diagram
ST – Steam Turbine
TEA – Techno-Economic Analysis

Summary:

Exhaust Gas Recirculation (EGR) system for DE-FE-0032131 is a "go" and is recommended to be included in the detailed design going forward as a part of this Carbon Capture System (CCS) Front-End Engineering Design (FEED) Study.

As a part of FEED Study DE-FE-0032131, "Retrofittable Advanced Combined Cycle Integration for Flexible Decarbonized Generation", EGR was investigated as an integration concept to enhance NGCC operation. This option that is being reported individually, as opposed to the other GT and ST integration options that will be reported out in a separate combined report leading to the conclusion of the conceptual design stage and the down-select of one concept for detailed design, operability review, Techno-Economic Analysis (TEA) and Life Cycle Analysis (LCA).

This EGR assessment does NOT signal the completion of the detailed EGR design, but represents the completion of the conceptual design, initial cost and performance assessment, and a high-level technology risk assessment with accuracy adequate to make a "go/no-go" decision on including EGR in the scope of down-selected configuration used for detailed design. Opportunities to improve and optimize the EGR design will be explored in the detailed design phase of this FEED Study.

The EGR conceptual assessment resulted in a net CapEx savings of ~$43.9MM and a net CC performance improvement of 7.6MW/0.2% pts with an NPV of ~$12MM bringing the total assessment to $55.9MM. The flue gas total flow to the CCS decreased 40% to 2.5MM lb/hr while the CO_2 molal concentration increased from 4% (no EGR) to 6.7% with 40% EGR. The primary cause of the $43.9MM CapEx savings was the reduction in Direct Contact Cooler (DCC), Flue Gas Fan, and Absorber reduction in count from 2 per GT to 1 per GT, dramatically reducing the CCS footprint and installed cost. The primary cause of the $12MM performance improvement was the reduction of the CCS reboiler steam demand of nearly 10%.

The combined impact of EGR to the LCOE and Break Even CO_2 sales process is -$1.83, which represents a reduction of nearly 2.7% on LCOE and 3.4% on Break Even CO_2 Sales price

While the EGR system does introduce additional points of potential failure and new operational risk, no "Red-Flag" EGR risks were identified, and the overall technical risk assessment predicts a net reduction in risk. This is primarily driven by a) the depth of design work done by GE over the last 10+ years on EGR, b) the application of EGR elevates the CO_2 concentration entering the CCS, moving it somewhat closer to proven CCS levels for coal and thereby reducing the CCS technology risk, and c) the EGR system serves as a dynamic "shock absorber" operating between the prime mover GT and the CCS system, allowing operability challenges (i.e. rapid loading and unloading) to be partially isolated, reducing the operability technology risks of the CCS. While the technology risk assessment was not detailed at this point, it was indicative that no Red-Flag EGR risks were identified, and the overall Technology Risk for EGR/CCS will directionally go down.

EGR is a system that takes a portion of the HRSG exhaust flue gas flow, cools that portion and recirculates it back to the inlet of the GT. The primary purpose of the EGR is to decrease the net flue gas flow exhausting from the GT, which reduces the cost of the downstream CCS system.

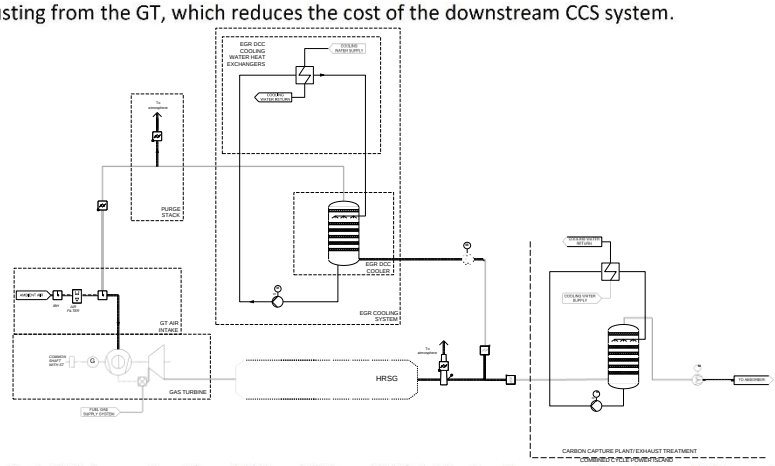

The extent that EGR is practical (i.e. 10% vs 20% vs 40%) is tied to the operational capability and stability of the GT combustor. Multiple lab tests have clearly and consistently demonstrated that while some amounts of EGR recirculation are tolerable and even beneficial, excess recirculation flows result in elevated levels of CO formation and increased combustion dynamics. In order to incorporate EGR, the combustor MUST have operability margin to be able to reliably manage the increased flame lengths and maintain optimum fuel splits for low emissions and dynamics. The current GT combustor at Plant Barry is a DLN 2.6 and does NOT have adequate operability margin for any significant level of EGR. To apply EGR successfully, the GT combustor MUST be upgraded to the DLN 2.6+ flex.

The preliminary EGR layout has been completed as is shown below

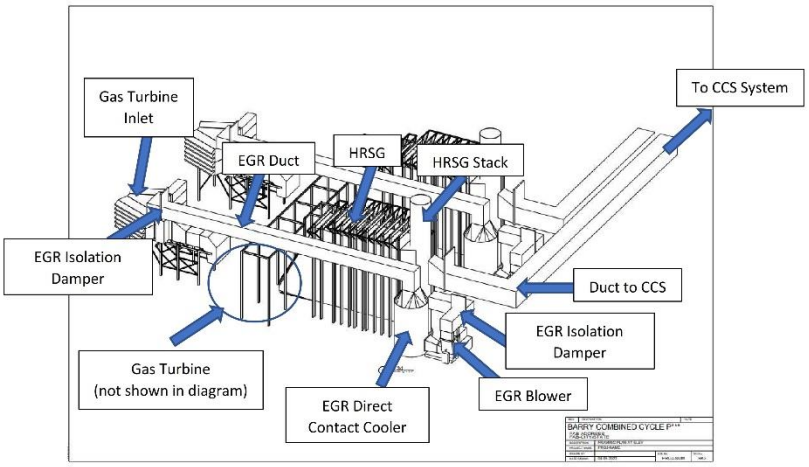

The preliminary Process Flow Diagram (PFD) is also shown below

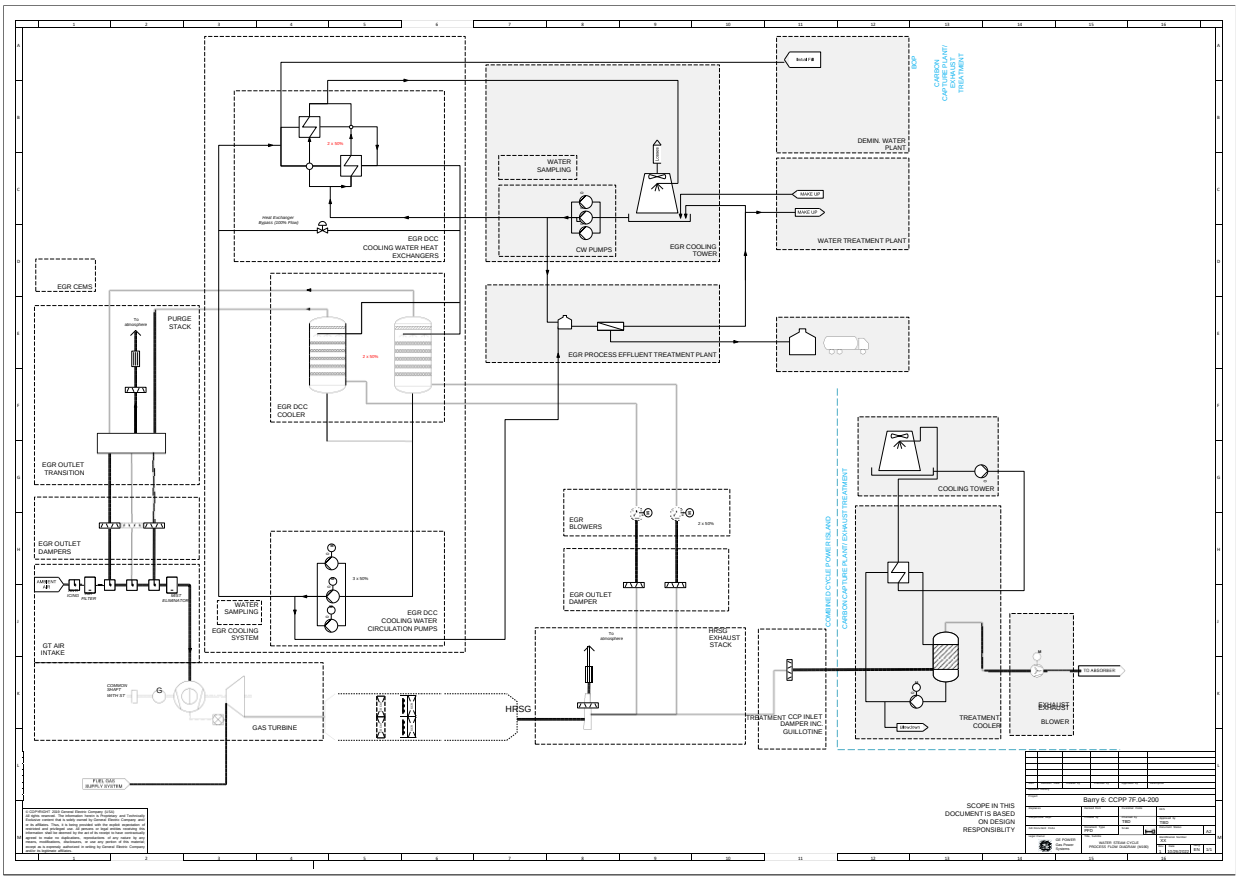

The summary of the plant performance is show below

GT Uprate config: 7F .05 Compressor with DLN 2.6+ and .04 AGP Tech			
Parameters	Units	EGR-OFF	40% EGR, 77F
GTP			
GT Power Output	KW per GT	212352	211663
GT Heat Rate	Btu/kw-hr	9066.1	9179.8
GT Exhaust Flow	lb/hr	4091715	4091701
GT Exhaust Temperature	F	1147.1	1162.7
GT Fuel Temperature	F	80	80
GT Exhaust Molecular Weight		28.35	28.51
GT Exhaust Composition			
Ar	mol%	0.88%	0.90%
N2	mol%	74.10%	75.50%
O2	mol%	12.11%	7.13%
CO2	mol%	3.99%	6.72%
H2O	mol%	8.91%	9.76%
HRSG Flue Gas to CCS			
Gas Outlet Flow	lb/hr	4091715.0	2455020.4
Gas outlet Pressure	psia	14.696	14.696
Gas Outlet Temperature	F	224.4	223.3
Composition			
Ar	mol%	0.88%	0.90%
N2	mol%	74.10%	75.50%
O2	mol%	12.11%	7.13%
CO2	mol%	3.99%	6.72%
H2O	mol%	8.91%	9.76%
EGR			
EGR H2O Condensate Flow	lb/sec	0.0	19.2
EGR Flow to Inlet	lb/sec	0.0	435.4
EGR Total Flow from Exhaust	lb/sec	0.0	454.6
EGR Inlet Temperature	F		77.0
Comp Inlet Composition			
Ar	mol%	0.92%	0.94%
N2	mol%	77.08%	78.57%
O2	mol%	20.68%	15.62%
CO2	mol%	0.03%	2.81%
H2O	mol%	1.29%	2.06%
Compressor Inlet Flow	lb/sec	1105.5	1105.2
Compressor Inlet Temp	F	59.00	66.12
Compressor Inlet RH	%	76.0%	93.0%
Plant Performance			
Plant Gross Output	kW	588,209	596,009
Plant Net Output	kW	579,582	587,215
Plant Gross Heat Rate (HHV)	Btu/kWhr	7,252.9	7,224.3
CCS Aux Loads			
CO2 Capture Process	MWe	18.8	18.8
CO2 Compression	MWe	17.0	17.1
Plant/CCS Net Output	kW	543,858	551,406
Plant/CCS Net Heat Rate (HHV)	Btu/kWhr	7,844.4	7,808.6
Plant/CCS Net Efficiency (HHV)		43.50%	43.70%

The EGR net cost savings of $43.9MM is a combination of EGR material and installation costs and CCS material and installation costs. The EGR material and installation costs were evaluated by GE based on the preliminary design, budgetary quotes on the EGR DCC and Flue Gas Fans, and historical bulk material costs.

EGR Cost Adders (all costs are for 2 GT trains total): $62.1MM

Duct Work and Dampers $19.6MM

- includes modifications to existing HRSG stack, purge stack, instrumentation, support steel, foundations, material transportation, and site installation

EGR Blower (Flue Gas Fan) and Motor $3.5MM

- includes EGR blowers, motors, foundations, material transportation, and site installation

EGR DCC and Cooling System $34.8MM

- includes EGR DCC Coolers, CCW Heat Exchanger, CCW Circ Pumps and Motors, Pump Flow Control Valves, CW Pump strainers, CW instrumentation, CW supply and return piping, foundations, material transportation, and site installation (Assumes CW flow for new CCW Heat Exchanger diverted from existing Cooling Tower).

GT Air Inlet Mixer $2.4MM

- includes GT inlet mixer and drift eliminator, modification to existing inlet filter house, material transportation, and site installation

EGR sampling system $1.8MM

- includes GT inlet mixer and drift eliminator, modification to existing inlet filter house, material transportation, and site installation

EGR Cost Deducts (all costs are the 2 GT trains total): -$106MM

CCS DCC, Absorber, flue gas fans, Striper -$30MM

- includes engineering, material, shipping to site, material first fills

CCS ISBL Installation and OSBL -$76MM

- includes Installation of 1 DCC, flue gas fan, Absorber (12.3m dia) per GT vs 2 w/o EGR

TOTAL CapEx Savings $43.9MM

The overall impact to LCOE and Break Even CO_2 Sales Price are:

	LCOE ($/MW-hr)	Break Even CO_2 Sales Price ($/tonne CO_2)
No EGR Case	$80.16	$72.75
Add EGR*	$78.84	$70.78
TOTAL	Delta = -$1.31	-$1.96

*Adding EGR results in +$43.9MM CapEx, +7.548MW Net CC/CCS, -35.8Btu/kW-hr Net HHV CC/CCS

Conclusion:

No Re-Flag Risks, lower technology risks, improved LCOE and Break Even CO_2 sales price

⇧ EGR is a “go” for detailed design

Appendix G

Down Select NGCC+CCS Configuration

Retrofittable Advanced Combined Cycle Integration for Flexible Decarbonized Generation

Deliverable –

SOPO 2.2.2 "Down-select NGCC/CCS Configuration"

DE-FE-0032131

John Sholes (GEGP) **Principal Investigator**

Joe Weber (GEGP) **External Project Manager**

June 24, 2022

Revised Sept 12, 2022

Revision Notes:

Sept 12, 2022:

- **Removed References to $50/tonne CO_2 45Q (Inflation Reduction Act set $85/tonne CO_2)**
- **Added table of acronyms used**
- **Updated Options 2 and 3 Performance based on higher HRSG ΔP due to higher flue gas flows**
- **Updated Option 3 Performance and CapEx based on Permit required addition of CO catalyst**
- **Option 2 Now Recommended from Down-select**

Acronyms:

AeN-	Steam Turbine Effective Nozzle Area
AGP-	Gas Turbine Advanced Gas Path upgrade
BOP –	Balance of Plant
CapEx –	Capital Expense
CC -	Combined Cycle
CCS –	Carbon Capture System
CF –	Capacity Factor
CO_2 T&S –	CO_2 Transportation and Storage
CRV –	Combined Reheat Valve (at Hot Reheat)
CSCV –	Combined Stop and Control Valve (at HP inlet)
DB –	Duct Burner in HRSG to produce additional steam
DCC –	Direct Contact Cooler
DLN –	Dry Low NOx (combustor)
EGR –	Exhaust Gas Recirculation
FEED –	Front End Engineering Design
GE –	General Electric
GEGP –	General Electric Gas Power
GSU –	Generator Step Up Transformer
GT –	Gas Turbine
HOR0 –	High Output Row 0 GT Compressor
HHV –	fuel Higher Heating Value
HP –	High Pressure Steam Turbine section
HR –	Heat Rate
HRH –	Hot ReHeat (inlet to IP Steam Turbine section)
HRSG –	Heat Recovery Steam Generator
IP –	Intermediate Pressure Steam Turbine section
LCA –	Life Cycle Analysis
LCOE –	Levelized Cost of Electricity ($/MW-hr)
LHV –	fuel Lower Heating Value
LP –	Low Pressure Steam Turbine section
MECL –	Minimum Emissions Compliance Load on Gas Turbine
MT –	Metric Tonne (1000 kg)
NGCC –	Natural Gas Combined Cycle
NPV –	Net Present Value
OPEX –	Operating Expenses
PA –	Power Augmentation to Gas Turbine with steam injection to combustor
ST –	Steam Turbine
TEA –	Techno-Economic Analysis
XO –	Steam Turbine Crossover (at input to double flow LP section)

Summary:

The Down-select NGCC/CCS Configuration for DE-FE-0032131 is a combination of integrated steam supply from the existing D11 Steam Turbine with the addition of a new crossover butterfly control valve, together with a GT uprate to recover the lost MW from CCS and to maximize the NGCC MW and CO_2 capture amounts to reduce the levelized $/MW-hr and $/tonne CO_2. The recommended GT uprate is the 7F.05 Compressor upgrade with the AGP Tech.

As a part of FEED Study DE-FE-0032131, "Retrofittable Advanced Combined Cycle Integration for Flexible Decarbonized Generation", both Steam Turbine and GT options were investigated as an integration concept to enhance NGCC operation. These options are in addition to the EGR "go" recommendation already issued on June 10, 2022. These GT and ST integration options represent the conclusion of the conceptual design stage and the down-select of one concept for detailed design, operability review, Techno-Economic Analysis (TEA) and Life Cycle Analysis (LCA).

This GT/ST assessment does NOT signal the completion of the detailed system design, but represents the completion of the conceptual design, with a down-select on the configuration for detailed design.

The use of the new crossover butterfly vale allows the best efficiency, lowest cost option of supplying reliable steam to the CCS, allowing stable operation of both the NGCC and CCS.

The GT configuration selected for detailed design is the 7F.05 Compressor (**Option 2**), with AGP Tech and EGR. This configuration avoids the permit threshold requiring a CO catalyst from Option 3, while aggregating a high amount of annual CO_2 captured (1.7MM tonnes/yr) and power (4.12MM MW-hrs/yr) to minimize the levelized $/MW-hr and $/tonne CO_2.

The selected GT configuration drives the highest Net Value of +$30.8MM relative to Base (with no GT upgrade at all). While the combined CapEx (GT, ST, BOP, CCS) of $155.8MM is required, the result is increased Performance (+76.6MW/-50 Btu/kW-hr) worth $51.3MM and an increased CO_2 capture stream (+0.22 MM tones/yr) worth $14.1MM/yr ($85 45Q/85% CF).

	Base	Option 1	Option 2 Recommended	Option 3
GT Config	Existing GT	Add AGP Tech	Add .05 Compressor	Replace with 7F.05
Cold Day Baseload CC Net	512.6	547.7	562.9	594.8
Hot Day Baseload CC Net	456.7	460.3	544.2	580.6
Avg Day Baseload CC Net	476.4	493.0	553.0	587.1
Avg Day Baseload CC Net HR (HHV)	7764	7634	7714	7615
CO_2 Capture, MM MT/yr	1.48	1.50	1.70	1.80
GT/ST/BOP CapEx	$83.9MM	$102.5MM	$155.8MM	227.4MM
Net VALUE, wrt BASE ($85/tonne 45Q)	BASE	+$6.8MM	+$30.8MM	+$24.9MM

A result of implementing Carbon Capture to the NGCC at Plant Barry is a reduction of approximately 75MW (14%) in Net Output due to 2 factors:

1) The Steam Turbine Generator output decreases by approximately 42 MW (20%) due to large steam extraction required to operate the CCS process, specifically the reboiler.
2) The additional CCS Auxiliary loads of approximately 33 MW, including CO_2 compressors

This impact is experienced across the entire operating ambient temperature as show below:

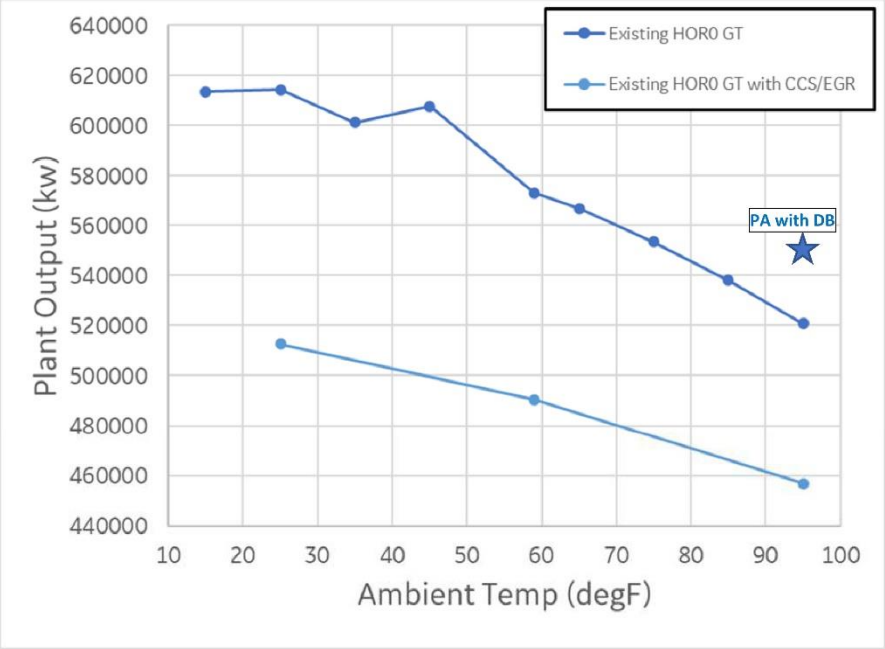

In order to evaluate several potential configurations for primarily the GT, a simplified, streamline method was developed (as compared to the more detailed approach that will be used on the detailed design and costing later in this FEED Study).

Performance Basis

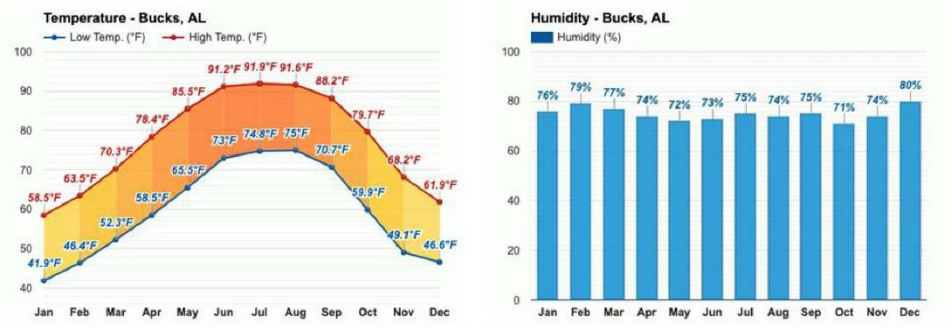

After discussions with the host (Southern Company Services), the presumed dispatch going forward, after installation of CCS is:

85% daytime/55% night Capacity Factor 4 winter months (Nov, Dec, Jan, Feb)

94% daytime/85% night Capacity Factor 4 shoulder months (Mar, Apr, Sep, Oct)

99% daytime/91% night Capacity Factor 4 summer months (May, Jun, Jul, Aug)

By temperature and GT/Plant Load:

25F 600 hrs Total: 600 hrs baseload

65F 3346 hrs Total: 2946 hrs baseload, 400 hrs baseload with HRSG Duct Burner max

95F 3500 hrs Total: 2000 hrs baseload, 1400 hrs baseload with HRSG Duct Burner max, 100 hrs peakload with HRSG Duct Buner max and GT steam injection

7,446 hr Total (85% CF)

For a simplified down-select method, all of operation is assumed to be a Baseload, with no Duct Burner or GT steam injection operation:

25F 8% (600 hrs)

59F 45% (3346 hrs)

95F 47% (3500 hrs)

Total 100% (7446 hrs = 85% CF)

For each configuration, Baseload NGCC Net Output will be evaluated at 25F, 59F, and 95F to determine a weighted average NGCC Output.

Once the average NGCC Output (and Heat Rate) are determined, they are compared to the non-CCS base case to determine the Performance Value.

In order to evaluate the Performance Value, a simplified LCOE evaluation is used to calculate the derivatives of NPV $/kW and $/Btu for NGCC Net Output and Heat Rate.

The NETL Cost Transfer functions are used for DOE Programs. The time value of money terms inputted in Table 1 are representative of the Department of Energy's perspective and should be used for those efforts. These transfer functions should also be used for evaluation for other organizations which use NETL Costing methods as their baseline for comparison.

Table 1: NETL TVM Inputs

term	years	30
effective tax rate	fraction (0-1)	0.3
discount rate (WACC)	fraction (0-1)	0.0277
escalation rate	fraction (0-1)	0

$$Total\ LCOE\left[\$/_{MWh}\right] = Levelized\ CAPEX + Levelized\ Fuel + Levelized\ OPEX + Levelized\ Carbon\ Liability$$

$$Levelized\ CAPEX\left[\$/_{MWh}\right] = 0.0707 \times \frac{Total\ Plant\ CAPEX\ [\$]}{Total\ Plant\ Output\ [MWe] \times Operating\ Hours\left[\frac{hr}{yr}\right]}$$

$$Levelized\ Fuel\left[\$/_{MWh}\right] = 3.791 \times \frac{1}{Total\ Plant\ Efficiency\ (LHV)[\%]} \times Fuel\ Price\ (HHV)\left[\frac{\$}{MBTU}\right]$$

Levelized OPEX is fixed for the purpose of this study. It was fixed at a value which represents an approximation of the total plant fixed and variable operating cost.

$$Levelized\ OPEX\left[\$/_{MWh}\right] = 9\left[\frac{\$}{MWh}\right]$$

The amount of CO_2 captured per year is an important input to the Levelized Carbon Liability and Break-Even CO_2 Sales Price. It is calculated as follows:

$$CO2\ Captured\left[\frac{tonne\ CO2}{yr}\right] = 0.1978 \times \frac{Total\ Plant\ Output\ [MWe] \times Operating\ Hours\left[\frac{hr}{yr}\right] \times Capture\ Efficiency[\%]}{Total\ Plant\ Efficiency\ (LHV)[\%]}$$

The cost associated with CO_2 Disposal includes that cost for Transportation and Storage. Tax Credit is a negative value whereas disposal and carbon tax are positive LCOE inputs.

$$Levelized\ Carbon\ Liability\ \left[\$/_{MWh}\right] = 1.023 \times \frac{CO2\ Captured\left[\frac{tonne}{yr}\right] \times (CO2\ Disposal - Tax\ Credit + Carbon\ Tax)\left[\frac{\$}{tonne}\right]}{Total\ Plant\ Output\ [MWe] \times Operating\ Hours\left[\frac{hr}{yr}\right]}$$

By applying this LCOE equation for changes in NGCC Output, and Heat Rate, the partial derivatives can be found by holding LCOE constant using $4/MM Btu fuel price, $720MM Base CCS CapEx, including $15/tonne CO_2 T&S and $85/tonne CO_2 45Q tax credit of:

$1,155/kW and $141,300/(Btu/kW-hr, HHV)

Further discussion with the host site indicates that the $1,155/kW is excessive compared to their ability to get MW capacity elsewhere on their grid, and that the value to the host site is not more than half of that (i.e. $578/kW). The Heat Rate value is reasonable as-is.

These incremental performance value derivatives are then used to compare incremental cost (CapEx) vs incremental performance gains and losses

In addition to the CapEx of the GT/ST/BOP, several of the GT options will impact the CCS CapEx. The CCS CapEx for all of these options will have the same number of CCS vessels (2 absorbers with EGR), so the cost impact is somewhat smaller, but still scales with GT max exhaust flow raised to the 0.4 power.

The current 45Q tax credit was just changed to $85/tonne CO_2. This results in a net 45Q tax credit of $64/tonne CO_2 ($85 Tax Credit minus $15 T&S minus ~$6 OpEx) and the NPV is approximated by 5x the annual 45Q net credit. The NETL LCOE evaluates the actual multiplier for 45Q tax credit of 7.91 to equivalent CapEx. The 5x used in this down-select is conservative so-as not to over prioritize the 45Q contribution.

As reported previously in the EGR go/no-go report, a very significant cost reduction ($106MM) was achieved by reducing the CCS flue gas flow, allowing the use of 1 absorber and DCC tower per GT. The resulting 12.3m absorber tower is the largest Linde recommends and corresponds to maximum steady state flow of 2.46MM lb/hr flue gas flow into the CCS, or 4.1MM lb/hr GT Exhaust flow with 40% EGR recirculation flow ratio. Any GT Option considered to recover a part of all of the 75MW CCS loss must stay at or below the 4.1MM lb/hr at all operating ambient temperatures or risk a significantly increased CCS cost resulting from needing 2 absorbers per GT.

Several GT Options were studied with performance impacts ranging from small, to large, to very large:

1) Small: Upgrade GT Hot Gas Path to AGP Tech, with material upgrades in stage 2 and 3 buckets, allowing increases in GT firing temperatures. This utilizes the DLN 2.6+ Flex combustor already required for the application of the GT EGR system (covered in separate report issued 6/10/22). This provides >2% increased NGCC Net plant output and >1% improvement in NGCC Net plant heat rate compared to the existing GT after CCS is applied.
2) Large: Upgrade GT to 7F.04-200 configuration, including .05 Compressor, AGP Tech Hot Gas Path, 3-step aged turbine rotor. This also utilizes the DLN 2.6+ Flex combustor. This provides >15% increased NGCC Net plant output and >0.7% improvement in NGCC Net plant heat rate compared to the existing GT after CCS is applied. The resulting Net Plant output is essentially the same as the existing plant without CCS applied (i.e. it recovers the 75MW "lost" due to CCS).
3) Very Large: Replace the 7F.04 GT with a "Flange to Flange" replacement using a 7F.05. This also utilizes the DLN 2.6+ Flex combustor. This provides >20% increased NGCC Net plant output and >2% improvement in NGCC Net plant heat rate compared to the existing GT after CCS is applied. The resulting Net Plant output is greater than the existing plant without CCS applied (i.e. it recovers more than the 75MW "lost" due to CCS).

As the GT is upgraded, the HRSG produces more and more steam, resulting in required modifications to the HRSG (safety valves, moisture separators, attemperators, level control valves), the Steam Turbine (inlet piping, inlet valves, nozzles, rotating vanes and rotors) and BOP equipment (pumps, GSU coolers).

The Steam Turbine is a significant limitation at plant Barry. Despite reducing the ST Generator output due to the large LP extraction, the HP and especially IP sections are very limited from accommodating increased steam flows with the current hardware.

Further study of the ST has identified that significant increases in HP and IP ST flow capacity (up to 30%) can be accommodated with significant changes in the ST HP and IP hardware, including:

- Complete replacement of HP/IP steam path
- New HP/IP rotor
- New HP/IP Casing
    - Larger HP Inlet (18" fed by 2x14" Special Wall thickness)
    - Larger HP Exit
    - Larger IP Inlet (22")
- New HP Inlet Piping
- New HRH Inlet Piping
- New Combined Reheat Valve (22")

This is in addition to the modified LP that is required for ALL CCS cases.

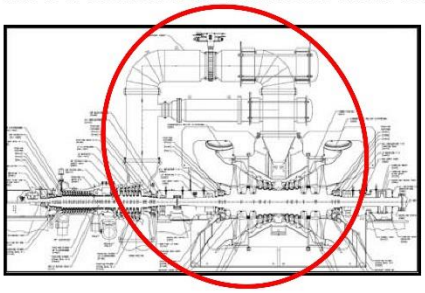

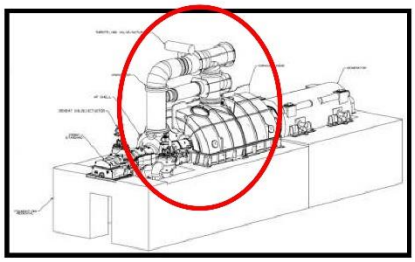

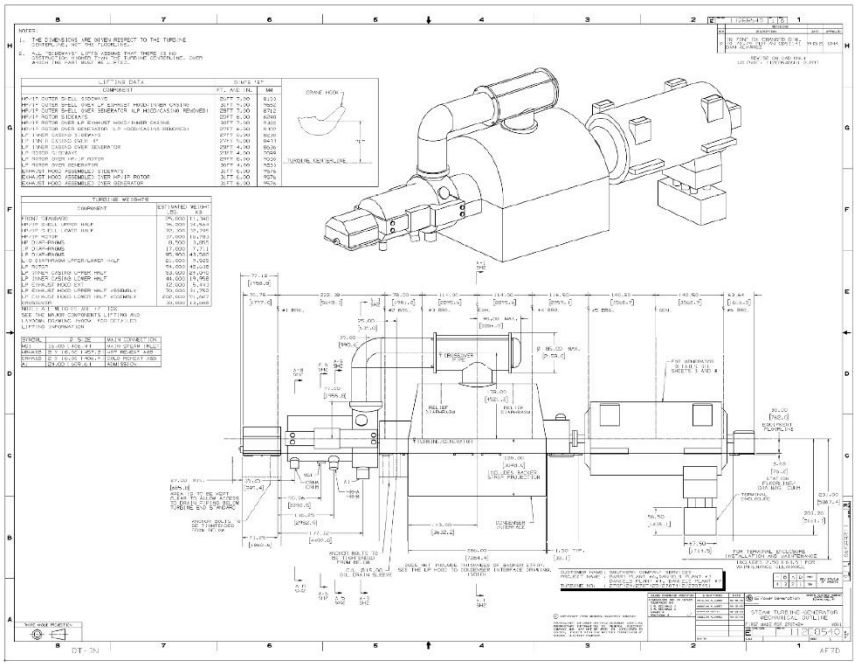

Barry Unit 6 (270T424) CCS Study:				
			7F.05 AGP HBD (28" LSB)	
		Original Design	NEW HPIP Shell and CRV	Comments
	% Throttle AeN Increase	0%	30%	
	Throttle Flow (lbm/hr)	874975	1152355	
	Throttle Pressure (psia)	1814.7	1825.3	
	Throttle Temp (deg F)	1050.0	1041.0	
	Throttle Enth. (BTU/lbm)	1510.8	1505.0	
	Throttle AeN	12.39	16.16	
	CSCV Code	10CSHR20B	10CSHR20B	
	Valve throat V (fps)	174	226	CSCV throat Velocity max limit is 400fps.
	Valve ***Only*** dp/p (%)	0.71	1.22	
	HP Inlet Pipe	16" Special Wall	**18" Special Wall**	New Inlet pipe must connect w/existing 2x14spwall pipes from existing CSCVs.
	HP Inlet Pipe ID (in.)	11.0	**13.5**	Estimated ID for new 18spwall pipe.
	HP Inlet Vel. (fps)	170	148	
	HP Exhaust Press. (psia)	448.2		"Restricted Uprate" max flow may be limited by existing HRSG RHSV setpoint pressure.
	HP Exhaust Pipe ID (in.)	14.7	**16.0**	
	HP Exhaust Vel. (fps)	139	153	
	% HRH AeN Increase	0%	31%	
	HRH Flow (lbm/hr)	930285	1242507	
	HRH Pressure (psia)	427.3	435.1	"Restricted Uprate" max flow may be limited by existing HRSG RHSV setpoint pressure.
	HRH Temp (deg F)	1050.0	1049.8	
	HRH Enth (BTU/lbm)	1549.3	1549.0	
	HRH AeN	57.46	75.36	
	CRV Code	16CRHU07B	**20CRHC08B**	
	Valve throat V (fps)	222	180	
	Valve ***Only*** dp/p (%)	1.48	0.64	
	IP Inlet Pipe	18Sch100	**22Sch100**	
	IP Inlet Pipe ID (in.)	15.7	**19.25**	
	IP Inlet Vel. (fps)	200	174	
	XO Pipe ID (in.)	59.0	59.0	
	XO Pipe Vel (fps)	171	158	

The Steam Turbine can be modified up to 30% on effective nozzle area but will require new HP/IP casing, new HP/IP steam path and rotor, new HP Inlet piping (18" vs current 16"), HP exhaust (CRH) piping, combined reheat valve (CRV, 20" vs current 16"), HRH inlet piping (22" vs current 18").

The supply steam for the CCS is needed at a minimum of 5 bara (72.5 psia) and 50F superheated. The lower the pressure the steam is removed from the steam turbine, the lower the impact to ST output. For example, taking all of the steam from the HP Steam line will impact the steam turbine output 1.75 times more than taking all of the steam from the LP crossover (i.e. the 42MW ST loss mentioned earlier would be 74MW if all of the steam were supplied from the HP steam header instead of the LP crossover.

However, as the GT and plant load is reduced, less steam is created, and the inlet pressures to the HP, IP, and LP sections decrease proportionate with the flow. As the load goes down, the new crossover butterfly valve will close to maintain constant steam supply pressure (5 bara) for the CCS process, but this increases both the pressure drop across the butterfly valve, and the IP steam turbine exit temperature and the IP steam turbine expansion occurs over a lower and lower pressure ratio. At a part load that is anticipated to be near 50% of Baseload, the pressure drop across the valve is anticipated to be near its maximum sustainable level, as well as the IP steam turbine exit temperature being near the

maximum allowable continuous level for maintaining a seal on the horizontal joint of the IP casing. When this limit is reached, the entire LP crossover extraction must be transitioned to the reheat or HP piping, which will cause a step drop in ST output and CC net efficiency.

In addition to the part load transition to reheat and/or hp steam to supply the CCS, at an even lower load that is anticipated to be near 30% of Baseload, but still above the Minimum Emissions Compliance Level (MECL) of the Gas Turbine, the amount of steam passing thru the LP section of the Steam Turbine will be barely adequate for cooling the ST LP section, due to windage heating. At this point in turndown, the operator will need to choose to either take the Steam Turbine offline (and bypass the steam not sent to CCS directly to the condenser), OR the CCS must be shut down, eliminating the steam extraction and increasing the steam flow in the LP section of the Steam Turbine.

In summary, the configuration strategy of the Steam Turbine is:

- Install new crossover butterfly valve to create a controlled pressure supply location for the 5 bara steam to the CCS
- The LP section of the Steam Turbine will be decreased by 25 to 50% to reflect the new flow conditions with CCS online with a new 2x28" Last Stage Bucket
- In the event that CCS is taken offline above 50-60% of Baseload, a portion of the LP steam must be bypassed around the LP section of the Steam Turbine, or the Hot Reheat to condenser bypass must be utilized to bypass the same portion around the IP and LP sections to safeguard from over-pressuring the crossover with the newly reduced LP Steam Turbine section.
- The LP Superheater outlet of the HRSGs will be re-directed in the LP steam piping to supply the CCS steam, holding the HRSG LP drums at a near constant ~6 bara pressure.
- The CCS Steam will be supplied from the Crossover of the LP Steam turbine upstream of the new butterfly control valve.
- At low loads, as IP exhaust temp increases, and the new crossover butterfly valve delta-P increases, the ST control system will automatically transition to reheat and/or HP steam supply to the CCS and the crossover butterfly valve will transition to wide open.
- The HP and IP sections of the Steam Turbine will be increased in flow capacity (higher AeN's) proportionate to the GT uprate demand.
- For the largest GT Uprates, this will require new HP/IP casing, new inlet steam piping, and new Combined Reheat Valve (CRV).

A preliminary BOP and ST operating philosophy will be developed in the preliminary design phase about to start in the FEED Study.

Since the 30% AeN increase is feasible, all 3 GT uprate options listed earlier are still “in play”

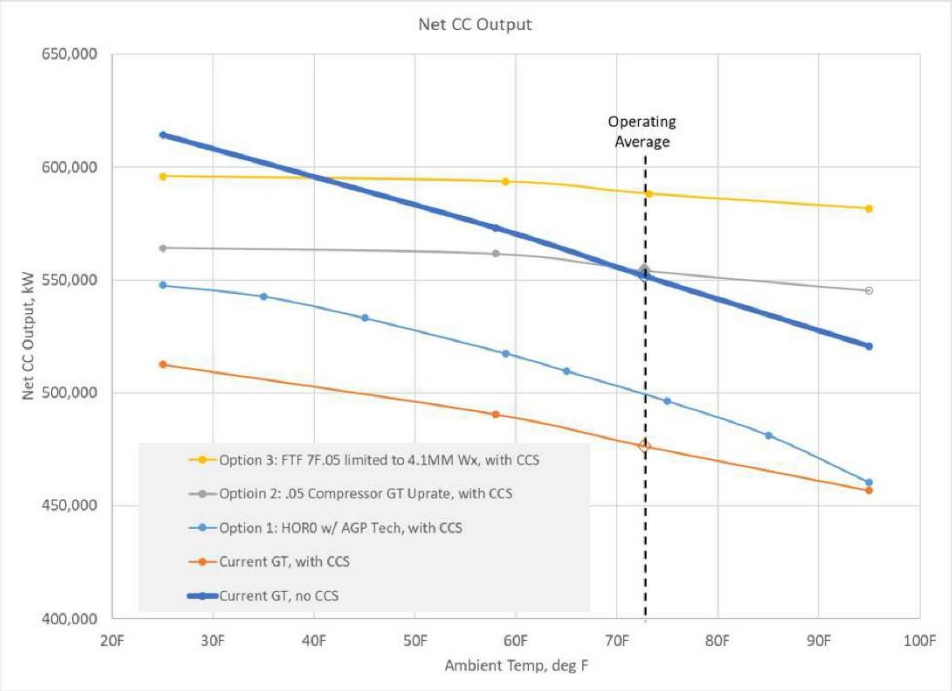

In order to make a final down-select, the CapEx is compared to the Performance Value.

Base Case (Existing GT NO CCS or EGR):

25F:	614.3 MW, 6681 Btu/kWhr (HHV)	Net NGCC	
59F:	573.1 MW, 6657 Btu/kWhr (HHV)	Net NGCC	
95F:	520.9 MW, 6693 Btu/kWhr (HHV)	Net NGCC	(551MW Net with Power Aug)
avg:	**551.9 MW, 6676 Btu/kWhr (HHV)**	**Net NGCC**	

Base CCS Case (Existing GT with CCS and 40% EGR) (Comparison Base for Options below):

25F:	512.6 MW, 7738 Btu/kWhr (HHV)	Net NGCC
59F:	490.5 MW, 7718 Btu/kWhr (HHV)	Net NGCC
95F:	456.7 MW, 7813 Btu/kWhr (HHV)	Net NGCC
avg:	**476.4 MW, 7764 Btu/kWhr (HHV)**	**Net NGCC**

1.48MM tonnes/yr CO_2, $94.7MM/yr net 45Q tax credit
CCS sized for 3,789,504 lb/hr (CCS Island ~$581MM)

CapEx: $83.9MM ($68.9MM for GT EGR/DLN2.6+ + $15MM ST for LP modifications) needed for ALL Options

Option 1 (small) AGP Tech

25F:	547.7 MW, 7499 Btu/kWhr (HHV)	Net NGCC
59F:	517.5 MW, 7633 Btu/kWhr (HHV)	Net NGCC
95F:	460.3 MW, 7657 Btu/kWhr (HHV)	Net NGCC
avg:	**493.0 MW, 7634 Btu/kWhr (HHV)**	**Net NGCC**

1.5MM tonnes/yr CO_2, $96MM/yr net 45Q tax credit
CCS sized for 3,936,733 lb/hr (CCS Island ~$590MM)

Performance Change (weighted average): +16.6 MW, -130 Btu/kWhr Net NGCC
Performance Value: +$28MM (+$9.6MM MW + $18.4MM Btu)

CapEx: $102.5MM ($83.5MM GT + $17MM ST + $2MM BOP) includes: GT EGR, GT AGP Tech, ST HP/IP nozzle upgrades, LP replacement, HRSG Safety Valves

Note: Increased max GT Exhaust Flow 3.94MM lb/hr compared to Option 1 results in CCS Capture island added cost of ~$9MM, with increased 45Q tax credits due to higher CO_2 tones/yr:

Effective CapEx (wrt BASE): $27.6MM ($9MM CCS + $14.6MM GT + $2MM ST + $2MM BOP)

NET VALUE of Option 1 compared to BASE **+$6.8MM (@$85/tonne CO_2 45Q) @ 85% CF**

Note: NET VALUE drops to +$6MM @ 75% CF

Recommendation: ☑**Implement?? (CapEx < Perf Value) Check Opt 2 and 3 to see if either is better??**

Recommended

Option 2 (large) .05 Compressor, 3SAR, AGP Tech (INSTEAD OF Option 1)

25F:	562.9 MW, 7733Btu/kWhr (HHV)	Net NGCC (can reach non-CCS with GT extended Peak)
59F:	560.3 MW, 7681 Btu/kWhr (HHV)	Net NGCC
95F:	544.2 MW, 7742 Btu/kWhr (HHV)	Net NGCC (high enough to replace Power Aug)
avg:	**553.0 MW, 7714 Btu/kWhr (HHV)**	**Net NGCC (recovers all of "lost" MW to CCS)**

1.7MM tonnes/yr CO_2, $108.8MM/yr net 45Q tax credit
CCS sized for 4,100,000 lb/hr (CCS Island ~$600MM)

(Note: Performance includes +4.7" H_2O HRSG ΔP due to high flue gas flow)

Performance Change (weighted average): +76.6 MW, -50 Btu/kWhr Net NGCC
Performance Value: +$51.3MM (+$44.2MM MW + $7.1MM Btu)

CapEx: $155.8MM ($109.1MM GT + $30MM ST + 16.7MM BOP)
includes: GT EGR, GT .05 Compressor, AGP Tech, ST HP/IP steam path and rotor, LP Replacement, HRSG Safety Valves and moisture separators, GT GSU cooling upgrades

Note: Increased max GT Exhaust Flow 4.1MM lb/hr compared to Option 1 results in CCS Capture island added cost of ~$19MM, with increased 45Q tax credits due to higher CO_2 tones/yr:

Effective CapEx (wrt BASE): $90.9MM ($19MM CCS +$40.2MM GT +$15MM ST +$16.7MM BOP)

NET VALUE of Option 2 compared to BASE **+$30.6MM (@$85/tonne CO_2 45Q) @ 85% CF**

Note: NET VALUE drops to +$22.5MM @ 75% CF

Recommendation: ☑**Implement?? (CapEx << Perf Value)**

Check Option 3 to see if it is better??

NET VALUE of Option 2 > Option 3

Recommendation: ☑**Implement INSTEAD of Option 3**

Option 3 (very large) 7F.05 Flange to Flange (limited to 4.1MM lb/hr Wx) (INSTEAD OF Option 1)

25F:	594.8 MW, 7644 Btu/kWhr (HHV)	Net NGCC (can reach non-CCS with GT Peak)
59F:	592.5 MW, 7591 Btu/kWhr (HHV)	Net NGCC
95F:	580.6 MW, 7634 Btu/kWhr (HHV)	Net NGCC (high enough to replace Power Aug)
avg:	**587.1 MW, 7615 Btu/kWhr (HHV)**	**Net NGCC**

1.8MM tonnes/yr CO_2, $115.2MM/yr net 45Q tax credit
CCS sized for 4,100,000 lb/hr (CCS Island ~$600MM)

Performance Change (weighted average): +110.7 MW, -149 Btu/kWhr Net NGCC
Performance Value: +$85.0MM (+$64.0MM MW + $21.0MM Btu)

CapEx: $227.4MM ($140.8MM GT + $41.6MM ST + $45.0MM BOP)
includes: GT EGR, 7F.05 flange-to-flange, ST HP/IP shell, CRV valves, IP inlet piping, steam path and rotor, LP Replacement, HRSG Safety Valves, attemperators and moisture separators, GT GSU cooling replacements PLUS replace SCR with combined SCR/CO Catalyst

Note: While same max GT Exhaust flow (4.1MM lb/hr) maintains same CCS Capture island cost (as Option 2) of $19MM over Base Case, the 45Q tax credits are expected to increase:

Effective CapEx (wrt BASE):$162.5MM ($19MM CCS +$71.9MM GT +$26.6MM ST +$45MM BOP)

NET VALUE of Option 3 compared to BASE **+$24.9MM (@$85/tonne CO_2 45Q)**

Note: NET VALUE drops to +$12.9MM @ 75% CF

Recommendation: **Implement Option 2 (NET VALUE > Option 3)**

NET VALUE of Option 3 < Option 2

Recommendation: **Implement Option 2**

Note that both opt 2 and 3 result is much higher levels of CO_2 capture (+0.22 and +0.32MM tones/yr) that correspond to much higher annual 45Q net tax credits (+$14.1 and +$20.5MM/yr)

Conclusions:

- Applying CCS to Plant Barry 2x1 7F.04 with EGR results in weighted average Plant Net Output reduction of 75MW if the GT is not modified
- In addition to EGR (and the required DLN 2.6+ Flex combustor), modification to the LP crossover (adding butterfly control valve), and LP steam path (reducing flow swallowing capacity) are required irrespective if any GT updrades are applied
- Using the NETL LCOE evaluation with reduced MW Capacity value on all MW, per Host site, value of CC MW and HR is $578/kW, $141,300/Btu/kW-hr
- The 45Q Net Tax credit assumes $15/tonne T&S and $6/tonne OpEx. This drives a very large difference in 45Q net credit for each GT configuration. NETL LCOE evaluation effectively counts 7.9 yrs 45Q tax credit having same impact as CapEx. A conservative 5-year Value is used here.
- 4 GT Configuration were evaluated – **Option 2 is Recommended**

	Base	Option 1	Option 2 (Recommended)	Option 3
GT Config	Existing GT	Add AGP Tech	Add .05 Compressor	Replace with 7F.05
Cold Day Baseload CC Net	512.6	547.7	562.9	594.8
Hot Day Baseload CC Net	456.7	460.3	544.1	580.6
Avg Day Baseload CC Net	476.4	493.0	553.0	587.1
Avg Day Baseload CC Net HR (HHV)	7764	7634	7714	7616
Delta MW From BASE	BASE	+16.6 MW	+76.6 MW	+110.7 MW
GT Exhaust Flow, k lb/hr	3,790	3,937	4,100	4,100
CO_2 Capture, MM MT/yr	1.48	1.50	1.70	1.80
CCS Island Cost	$581MM(est)	$590MM(est)	$600MM(est)	$600MM(est)
GT/ST/BOP CapEx (incl EGR and DLN 2.6+)	$83.9MM	$102.5MM	$155.8MM	$227.4MM
MW Value, wrt BASE	BASE	+$9.6MM	+$44.2MM	+$64.0MM
HR Value, wrt BASE	BASE	+$18.4MM	+$7.1MM	+$21.0MM
Total Perf Value, wrt BASE	BASE	+$28.0MM	+$51.3MM	+$85.0MM
GT/ST/BOP/CCS CapEx, wrt BASE	BASE	+$27.6MM	+$90.9MM	+$162.5MM
Based on $85/tonne CO_2 45Q (Gross) Tax Credit, 85% CF				
45Q Net tax credits $MM/yr	$94.7MM/yr	$96MM/yr	$108.8MM/yr	$115.2MM/yr
45Q Net Value, wrt BASE	BASE	+$6.4MM	+$70.4MM	+$102.4MM
Net VALUE, wrt BASE	BASE	**+$6.8MM**	**+$30.8MM**	**+$24.9MM**

- CC Net Targets of 614.3MW (cold) and 551.3MW (hot) can be reached with extended peak (Option 2) or normal Peak (Options 3) without use of HRSG Duct Burners or GT Power Aug
- Holding CCS cost, while maximizing CC MW and CO_2 capture drives higher Net VALUE

Appendix H

ISBL Piping and Instrumentation Diagrams

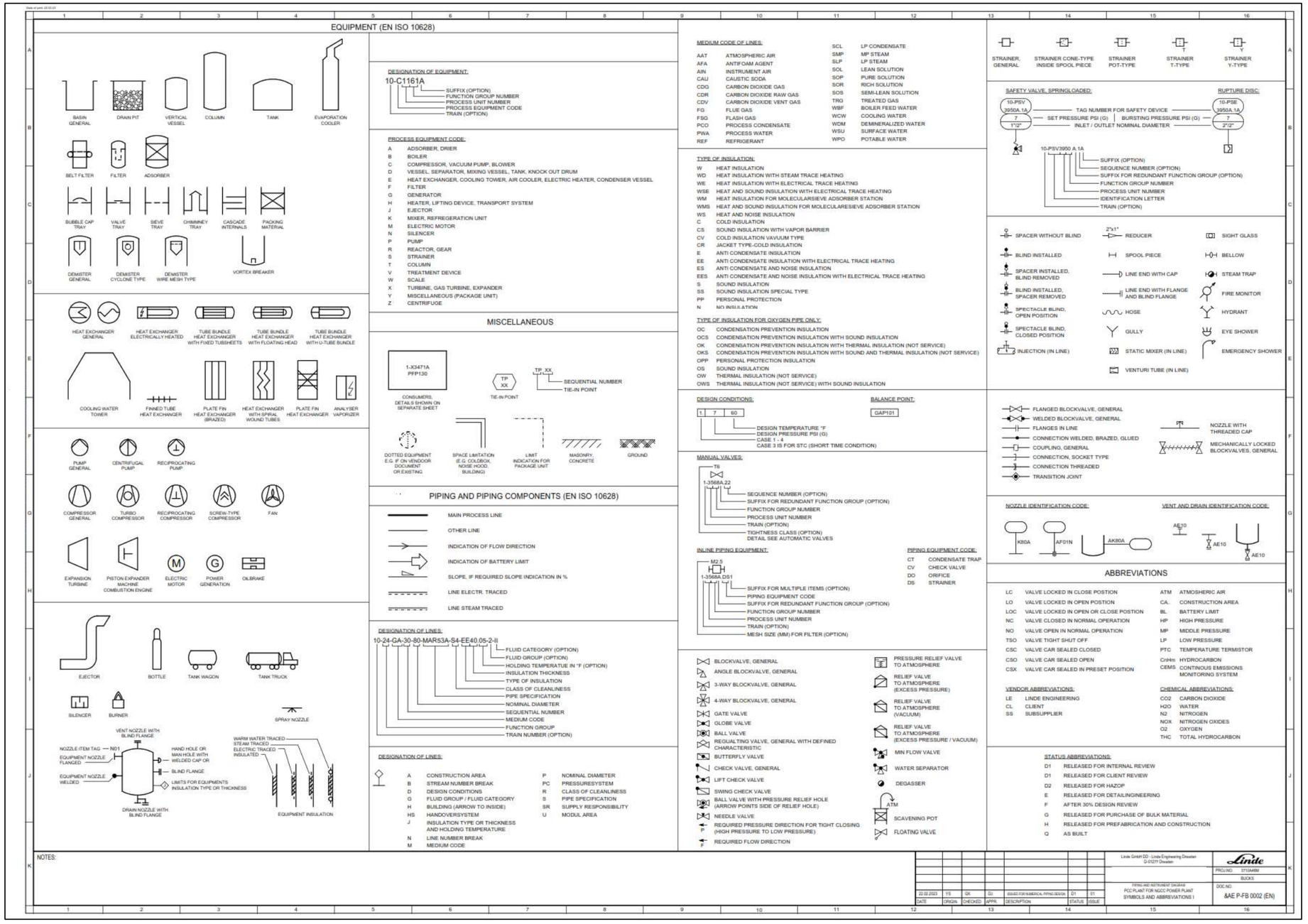
EQUIPMENT (EN ISO 10628)
BASIN GENERAL
DRAIN PIT
VERTICAL VESSEL
COLUMN
TANK
EVAPORATION COOLER
BELT FILTER
FILTER
ADSORBER
BUBBLE CAP TRAY
VALVE TRAY
SIEVE TRAY
CHIMNEY TRAY
CASCADE INTERNALS
PACKING MATERIAL
DEMISTER GENERAL
DEMISTER CYCLONE TYPE
DEMISTER WIRE MESH TYPE
VORTEX BREAKER
HEAT EXCHANGER GENERAL
HEAT EXCHANGER ELECTRICALLY HEATED
TUBE BUNDLE HEAT EXCHANGER WITH FIXED TUBSHEETS
TUBE BUNDLE HEAT EXCHANGER WITH FLOATING HEAD
TUBE BUNDLE HEAT EXCHANGER WITH U-TUBE BUNDLE
COOLING WATER TOWER
FINNED TUBE HEAT EXCHANGER
PLATE FIN HEAT EXCHANGER (BRAZED)
HEAT EXCHANGER WITH SPIRAL WOUND TUBES
PLATE FIN HEAT EXCHANGER
ANALYSER VAPORIZER
PUMP GENERAL
CENTRIFUGAL PUMP
RECIPROCATING PUMP
COMPRESSOR GENERAL
TURBO COMPRESSOR
RECIPROCATING COMPRESSOR
SCREW-TYPE COMPRESSOR
FAN
EXPANSION TURBINE
PISTON EXPANDER MACHINE COMBUSTION ENGINE
ELECTRIC MOTOR
POWER GENERATION
OILBRAKE
EJECTOR
BOTTLE
TANK WAGON
TANK TRUCK
SILENCER
BURNER
SPRAY NOZZLE
VENT NOZZLE WITH BLIND FLANGE
NOZZLE ITEM TAG: N01
EQUIPMENT NOZZLE FLANGED
EQUIPMENT NOZZLE WELDED
HAND HOLE OR MAN HOLE WITH WELDED CAP OR
BLIND FLANGE
LIMITS FOR EQUIPMENTS INSULATION TYPE OR THICKNESS
DRAIN NOZZLE WITH BLIND FLANGE
WARM WATER TRACED
STEAM TRACED
ELECTRIC TRACED
INSULATED
EQUIPMENT INSULATION
DESIGNATION OF EQUIPMENT:
10-C1161A
SUFFIX (OPTION)
FUNCTION GROUP NUMBER
PROCESS UNIT NUMBER
PROCESS EQUIPMENT CODE
TRAIN (OPTION)
PROCESS EQUIPMENT CODE:
A ADSORBER, DRIER
B BOILER
C COMPRESSOR, VACUUM PUMP, BLOWER
D VESSEL, SEPARATOR, MIXING VESSEL, TANK, KNOCK OUT DRUM
E HEAT EXCHANGER, COOLING TOWER, AIR COOLER, ELECTRIC HEATER, CONDENSER VESSEL
F FILTER
G GENERATOR
H HEATER, LIFTING DEVICE, TRANSPORT SYSTEM
J EJECTOR
K MIXER, REFREGERATION UNIT
M ELECTRIC MOTOR
N SILENCER
P PUMP
R REACTOR, GEAR
S STRAINER
T COLUMN
V TREATMENT DEVICE
W SCALE
X TURBINE, GAS TURBINE, EXPANDER
Y MISCELLANEOUS (PACKAGE UNIT)
Z CENTRIFUGE
MISCELLANEOUS
1-X3471A PFP130
CONSUMERS, DETAILS SHOWN ON SEPARATE SHEET
TP XX
TIE-IN POINT
TP XX
SEQUENTIAL NUMBER
TIE-IN POINT
DOTTED EQUIPMENT E.G. IF ON VENDOR DOCUMENT OR EXISTING
SPACE LIMITATION (E.G. COLDBOX, NOISE HOOD, BUILDING)
LIMIT INDICATION FOR PACKAGE UNIT
MASONRY, CONCRETE
GROUND
PIPING AND PIPING COMPONENTS (EN ISO 10628)
MAIN PROCESS LINE
OTHER LINE
INDICATION OF FLOW DIRECTION
INDICATION OF BATTERY LIMIT
SLOPE, IF REQUIRED SLOPE INDICATION IN %
LINE ELECTR. TRACED
LINE STEAM TRACED
DESIGNATION OF LINES:
10-24-GA-30-80-MAR53A-S4-EE40.05-2-II
FLUID CATEGORY (OPTION)
FLUID GROUP (OPTION)
HOLDING TEMPERATUE IN °F (OPTION)
INSULATION THICKNESS
TYPE OF INSULATION
CLASS OF CLEANLINESS
PIPE SPECIFICATION
NOMINAL DIAMETER
SEQUENTIAL NUMBER
MEDIUM CODE
FUNCTION GROUP
TRAIN NUMBER (OPTION)
DESIGNATION OF LINES:
A CONSTRUCTION AREA
B STREAM NUMBER BREAK
D DESIGN CONDITIONS
G FLUID GROUP / FLUID CATEGORY
H BUILDING (ARROW TO INSIDE)
HS HANDOVERSYSTEM
J INSULATION TYPE OR THICKNESS AND HOLDING TEMPERATURE
N LINE NUMBER BREAK
M MEDIUM CODE
P NOMINAL DIAMETER
PC PRESSURESYSTEM
R CLASS OF CLEANLINESS
S PIPE SPECIFICATION
SR SUPPLY RESPONSIBILITY
U MODUL AREA
MEDIUM CODE OF LINES:
AAT ATMOSPHERIC AIR
AFA ANTIFOAM AGENT
AIN INSTRUMENT AIR
CAU CAUSTIC SODA
CDG CARBON DIOXIDE GAS
CDR CARBON DIOXIDE RAW GAS
CDV CARBON DIOXIDE VENT GAS
FG FLUE GAS
FSG FLASH GAS
PCO PROCESS CONDENSATE
PWA PROCESS WATER
REF REFRIGERANT
SCL LP CONDENSATE
SMP MP STEAM
SLP LP STEAM
SOL LEAN SOLUTION
SOP PURE SOLUTION
SOR RICH SOLUTION
SOS SEMI-LEAN SOLUTION
TRG TREATED GAS
WBF BOILER FEED WATER
WCW COOLING WATER
WDM DEMINERALIZED WATER
WSU SURFACE WATER
WPO POTABLE WATER
TYPE OF INSULATION:
W HEAT INSULATION
WD HEAT INSULATION WITH STEAM TRACE HEATING
WE HEAT INSULATION WITH ELECTRICAL TRACE HEATING
WSE HEAT AND SOUND INSULATION WITH ELECTRICAL TRACE HEATING
WM HEAT INSULATION FOR MOLECULARSIEVE ADSORBER STATION
WMS HEAT AND SOUND INSULATION FOR MOLECULARESIEVE ADSORBER STATION
WS HEAT AND NOISE INSULATION
C COLD INSULATION
CS SOUND INSULATION WITH VAPOR BARRIER
CV COLD INSULATION VAVUUM TYPE
CR JACKET TYPE-COLD INSULATION
E ANTI CONDENSATE INSULATION
EE ANTI CONDENSATE INSULATION WITH ELECTRICAL TRACE HEATING
ES ANTI CONDENSATE AND NOISE INSULATION
EES ANTI CONDENSATE AND NOISE INSULATION WITH ELECTRICAL TRACE HEATING
S SOUND INSULATION
SS SOUND INSULATION SPECIAL TYPE
PP PERSONAL PROTECTION
N NO INSULATION
TYPE OF INSULATION FOR OXYGEN PIPE ONLY:
OC CONDENSATION PREVENTION INSULATION
OCS CONDENSATION PREVENTION INSULATION WITH SOUND INSULATION
OK CONDENSATION PREVENTION INSULATION WITH THERMAL INSULATION (NOT SERVICE)
OKS CONDENSATION PREVENTION INSULATION WITH SOUND AND THERMAL INSULATION (NOT SERVICE)
OPP PERSONAL PROTECTION INSULATION
OS SOUND INSULATION
OW THERMAL INSULATION (NOT SERVICE)
OWS THERMAL INSULATION (NOT SERVICE) WITH SOUND INSULATION
DESIGN CONDITIONS:
1 7 60
DESIGN TEMPERATURE °F
DESIGN PRESSURE PSI (G)
CASE 1 - 4
CASE 3 IS FOR STC (SHORT TIME CONDITION)
BALANCE POINT:
GAP101
MANUAL VALVES:
TS
1-3568A 22
SEQUENCE NUMBER (OPTION)
SUFFIX FOR REDUNDANT FUNCTION GROUP (OPTION)
FUNCTION GROUP NUMBER
PROCESS UNIT NUMBER
TRAIN (OPTION)
TIGHTNESS CLASS (OPTION)
DETAIL SEE AUTOMATIC VALVES
INLINE PIPING EQUIPMENT:
M2.5
1-3568A.DS1
SUFFIX FOR MULTIPLE ITEMS (OPTION)
PIPING EQUIPMENT CODE
SUFFIX FOR REDUNDANT FUNCTION GROUP (OPTION)
FUNCTION GROUP NUMBER
PROCESS UNIT NUMBER
TRAIN (OPTION)
MESH SIZE (MM) FOR FILTER (OPTION)
PIPING EQUIPMENT CODE:
CT CONDENSATE TRAP
CV CHECK VALVE
DO ORIFICE
DS STRAINER
BLOCKVALVE, GENERAL
ANGLE BLOCKVALVE, GENERAL
3-WAY BLOCKVALVE, GENERAL
4-WAY BLOCKVALVE, GENERAL
GATE VALVE
GLOBE VALVE
BALL VALVE
REGUALTING VALVE, GENERAL WITH DEFINED CHARACTERISTIC
BUTTERFLY VALVE
CHECK VALVE, GENERAL
LIFT CHECK VALVE
SWING CHECK VALVE
BALL VALVE WITH PRESSURE RELIEF HOLE (ARROW POINTS SIDE OF RELIEF HOLE)
NEEDLE VALVE
REQUIRED PRESSURE DIRECTION FOR TIGHT CLOSING (HIGH PRESSURE TO LOW PRESSURE)
REQUIRED FLOW DIRECTION
PRESSURE RELIEF VALVE TO ATMOSPHERE
RELIEF VALVE TO ATMOSPHERE (EXCESS PRESSURE)
RELIEF VALVE TO ATMOSPHERE (VACUUM)
RELIEF VALVE TO ATMOSPHERE (EXCESS PRESSURE / VACUUM)
MIN FLOW VALVE
WATER SEPARATOR
DEGASSER
ATM
SCAVENING POT
FLOATING VALVE
STRAINER, GENERAL
STRAINER CONE-TYPE INSIDE SPOOL PIECE
STRAINER POT-TYPE
STRAINER T-TYPE
STRAINER Y-TYPE
SAFETY VALVE, SPRINGLOADED:
RUPTURE DISC:
10-PSV 3950A.1A
7
1"/2"
TAG NUMBER FOR SAFETY DEVICE
SET PRESSURE PSI (G)
BURSTING PRESSURE PSI (G)
INLET / OUTLET NOMINAL DIAMETER
10-PSE 3950A.1A
7
2"/2"
10-PSV3950 A.1A
SUFFIX (OPTION)
SEQUENCE NUMBER (OPTION)
SUFFIX FOR REDUNDANT FUNCTION GROUP (OPTION)
FUNCTION GROUP NUMBER
PROCESS UNIT NUMBER
IDENTIFICATION LETTER
TRAIN (OPTION)
SPACER WITHOUT BLIND
BLIND INSTALLED
SPACER INSTALLED, BLIND REMOVED
BLIND INSTALLED, SPACER REMOVED
SPECTACLE BLIND, OPEN POSITION
SPECTACLE BLIND, CLOSED POSITION
INJECTION (IN LINE)
2"x1"
REDUCER
SPOOL PIECE
LINE END WITH CAP
LINE END WITH FLANGE AND BLIND FLANGE
HOSE
GULLY
STATIC MIXER (IN LINE)
VENTURI TUBE (IN LINE)
SIGHT GLASS
BELLOW
STEAM TRAP
FIRE MONITOR
HYDRANT
EYE SHOWER
EMERGENCY SHOWER
FLANGED BLOCKVALVE, GENERAL
WELDED BLOCKVALVE, GENERAL
FLANGES IN LINE
CONNECTION WELDED, BRAZED, GLUED
COUPLING, GENERAL
CONNECTION, SOCKET TYPE
CONNECTION THREADED
TRANSITION JOINT
PN
NOZZLE WITH THREADED CAP
MECHANICALLY LOCKED BLOCKVALVES, GENERAL
NOZZLE IDENTIFICATION CODE:
VENT AND DRAIN IDENTIFICATION CODE:
K80A
AF01N
AK80A
AE10
AE10
AE10
ABBREVIATIONS
LC VALVE LOCKED IN CLOSE POSTION
LO VALVE LOCKED IN OPEN POSTION
LOC VALVE LOCKED IN OPEN OR CLOSE POSTION
NC VALVE CLOSED IN NORMAL OPERATION
NO VALVE OPEN IN NORMAL OPERATION
TSO VALVE TIGHT SHUT OFF
CSC VALVE CAR SEALED CLOSED
CSO VALVE CAR SEALED OPEN
CSX VALVE CAR SEALED IN PRESET POSITION
ATM ATMOSPHERIC AIR
CA. CONSTRUCTION AREA
BL BATTERY LIMIT
HP HIGH PRESSURE
MP MIDDLE PRESSURE
LP LOW PRESSURE
PTC TEMPERATUR TERMISTOR
CnHm HYDROCARBON
CEMS CONTINOUS EMISSIONS MONITORING SYSTEM
VENDOR ABBREVIATIONS:
LE LINDE ENGINEERING
CL CLIENT
SS SUBSUPPLIER
CHEMICAL ABBREVIATIONS:
CO2 CARBON DIOXIDE
H2O WATER
N2 NITROGEN
NOX NITROGEN OXIDES
O2 OXYGEN
THC TOTAL HYDROCARBON
STATUS ABBREVIATIONS:
D1 RELEASED FOR INTERNAL REVIEW
D1 RELEASED FOR CLIENT REVIEW
D2 RELEASED FOR HAZOP
E RELEASED FOR DETAILINGINEERING
F AFTER 30% DESIGN REVIEW
G RELEASED FOR PURCHASE OF BULK MATERIAL
H RELEASED FOR PREFABRICATION AND CONSTRUCTION
Q AS BUILT
NOTES:
22.02.2023 YS GK DJ ISSUED FOR NUMERICAL PIPING DESIGN D1 D1
DATE ORIGIN. CHECKED APPR. DESCRIPTION STATUS ISSUE
Linde GmbH DD - Linde Engineering Dresden
D-01277 Dresden
Linde
PROJ.NO.: 3710A4BM
BUCKS
PIPING AND INSTRUMENT DIAGRAM
PCC PLANT FOR NGCC POWER PLANT
SYMBOLS AND ABBREVIATIONS I
DOC.NO.: &AE P-FB 0002 (EN)

INSTRUMENTATION

INSTRUMENTATION IDENTIFICATION LETTERS:

	FIRST LETTER		SUCCEEDING LETTERS		
	MEASURED OR INITIATING VARIABLE	MODIFIER (OPTIONAL)	READOUT OR PASSIVE FUNCTION	OUTPUT FUNCTION	MODIFIER
A	ANALYSIS		ALARM		
B	BURNER, COMBUSTION				
C	USER'S CHOICE			CONTROL	
D	USER'S CHOICE	DIFFERENTIAL			
E	ELECTRICAL VALUE		SENSOR (PRIMARY ELEMENT)		
F	FLOW RATE	RATIO (FRACTION)			
G	USER'S CHOICE		GLASS, VIEWING DEVICE		
H	HAND				HIGH, OPEN
I	USER'S CHOICE		INDICATE		
J	POWER	SCAN			
K	TIME, TIME SCHEDULE	TIME RATE OF CHANGE			
L	LEVEL		LIGHT STATUS		LOW, CLOSE
M	MOISTURE HUMIDITY	MOMENTARY			MIDDLE, INTERMEDIATE
N	USER'S CHOICE			SOLENOID VALVE	
O	OPERATION COMMAND		ORIFICE RESTRICTION		
P	PRESSURE, VACUUM		POINT (TEST) CONNECTION		
Q	QUANTITY	INTEGRATE, TOTALIZE			
R	USER'S CHOICE		RECORD		
S	SPEED, FREQUENCY	SAFETY		SWITCH	
T	TEMPERATURE			TRANSMIT	
U	MULTIVARIABLE		MULTIFUNCTION	MULTIFUNCTION	MULTIFUNCTION
V	VIBRATION			VALVE, DAMPER LOUVER	
W	WEIGHT, FORCE		THERMOWELL		
X	GENERAL	X AXIS	COMMON		
Y	EVENT, STATE OR PRESENCE	Y AXIS		RELAY, COMPUTE, CONVERT	
Z	POSITION, DIMENSION	Z AXIS		DRIVE, ACTUATOR UNCLASSIFIED FINAL CONTROL ELEMENT	

INDICATION OF SIGNAL FLOW DIRECTION

SIGNAL LINE ARROW INDICATES BATTERY LIMIT

INSTRUMENT LINE FOR PROCESS CONNECTION

ELECTRIC SIGNAL

PNEUMATIC SIGNAL

CAPILLARY SIGNAL

INTERNAL SYSTEM LINK

PV PROCESS VALUE (OPTION)
MV MANIPULATED VALUE (OPTION)
SP SETPOINT (OPTION)
SL SWITCH LOW (OPTION)
SH SWITCH HIGH (OPTION)
SLL SWITCH LOW LOW (OPTION)
SHH SWITCH HIGH HIGH (OPTION)

LOGIC CONTROL SYSTEM IDENTIFICATION:

LOGIC CONTROL SYSTEM:

I LOGIC FUNCTION VIA SAFETY
M LOGIC FUNCTION VIA MCC
D LOGIC FUNCTION SEQUENCE

SIL 1 SAFETY INTEGRITY LEVEL1, 2 OR 3 (OPTION)
AIL ASSET INTEGRITY LEVEL (OPTION)

LOGIC CONTROL CAUSE AND EFFETS RELATIONS:

OUTGOING CONNECTOR:

CAUSE EFFECT
C : PDI3411 ; SHH / HS3411.1 / D1-S-C-TDxM / PFP30 / 1234

PDSHH 3411 LOOP

CONNECTOR NUMBER
DOC.-NO.
NOTE E.G. SPECIFIC SETPOINT IN BRACKETS OR WITH TIME DELAY; N1 (E.G. 500 MBAR OR 50%)
TDxM/S/H (TIME DELAY MINUTES / SECONDS / HOURS)

ACTION:

SWITCHES / VALVES:
C =OFF / CLOSE
O =ON / OPEN
OC =ON (OPEN) / OFF (CLOSED)
RE =RESET
PO =PERMISSIVE ON / OPEN
PC =PERMISSIVE OFF / CLOSED
IO =INHIBIT ON / OPEN
IC =INHIBIT OFF / CLOSED
EN =ENABLE / ACTIVATE / LOAD
DI =DISABLE / DE-ACTIVATE / UNLOAD
X =COMPLEX LOGIC

CONTROLLER:
C =CLOSE / OFF
O =OPEN / ON
M =MANUAL
MO =MANUAL OPEN
MC =MANUAL CLOSED
A =AUTOMATIC
S =ADJUST SPEED
W =SETPOINT
Y =OUTPUT
IM =INTERNAL MODE
EM =EXTERNAL MODE
IMC =INTERNAL MODE AND CLOSE
IMO =INTERNAL MODE AND OPEN
X =COMPLEX LOGIC

LOGIC:
LK =OFF / CLOSE
EX =ON / OPEN

TYPE OF SIGNAL: S: STATIC (FORCE) T: TRANSIENT (PULSE)

SUFFIX (OPTION): 7 SIL 7 (SAFETY INTEGRITY LEVEL "ON HOLD") A SIL A 1 SIL 1 2 SIL 2 3 SIL 3

SYSTEM: TYPE OF SYSTEM
D =DCS (DEFAULT)
I =PLC OR HARDWIRED IF NO PLC EXISTS
H =HARDWIRED (ONLY TO DISTINGUISH FROM PLC IF EXISTING)
M =MCC
A =AIL

STATUS:
AH =ALARM HIGH
AL =ALARM LOW
AU =AUTO
EA =FAULT
SHH =SWITCH HIGH HIGH
SH =SWITCH HIGH
SL =SWITCH LOW
SLL =SWITCH LOW LOW
OC =ON (OPEN) / OFF (CLOSE)
ON =ON (ACTIVE)
OFF =OFF
RDY =READY
VAL =VALID
LO =LOAD
UL =UNLOAD
(N) =NEGATION

LOOP IDENTIFIER

INCOMING CONNECTOR:

HS 3411 LOOP

CAUSE EFFECT
C : PDI3411 ; SHH / HS3411.1 / D1-S-C-TDxM / PFP30 / 1234

EXAMPLES:

ZI3411;SH(N) / HS3411 / D-S-PO / PFP30 / 456	=> TURBINE GUIDE VANES NOT OPEN ENABLES HS3411 ON
PI3412;SHH / HS3411 / D-S-C / PFP30 / 457	=> HIGH HIGH TURBINE DISCHARGE PRESSURE FORCES HS3411 OFF
TI3569;SLL / HS2615 / D-S-C-TD5M / PFP30 / 458	=> LOW LOW DISCHARGE TEMPERATURE VAPORISER FORCES HS2615 OFF (TIME DELAY 5M)
HS2615;OFF / PIC3271.2 / D-T-A-500 mbar / PFP30 / 459	=> HS2615 OFF PULSE SWITCHES PIC3271.2 CONTROLLER TO AUTO. AND SETPOINT TO 500 mbar
HS2615;OFF / FIC3211.2 / D-T-M / PFP30 / 460	=> HS2615 OFF PULSE SWITCHES FIC3211.2 TO MANUEAL (NO CHANGE TO OUTPUT)
HS2615;OFF / FIC3211.2 / D-T-M-50% / PFP30 / 461	=> HS2615 OFF PULSE SWITCHES FIC3211.2 TO MANUEAL AND OUTPUT TO 50%
HS2615;OFF / FIC3211.2 / D-T-A-50% / PFP30 / 462	=> HS2615 OFF PULSE SWITCHES FIC3211.2 TO AUTO AND OUTPUT TO 50%
HS2615;OFF / HIC3211 / D-T-Y-X% / PFP30 / 463	=> HS2615 OFF PULSE SWITCHES HIC3211 OUTPUT TO X%
TI3924;SLL / HS3924 / D1-S-C / PFP30 / 464	=> TSLL3924 FORCES HS3924 OFF (TO BE REALISED ACCORDING TO SIL 1 LEVEL)
HS3211;OFF / FIC3211.2 / D-T-A-200 Nm3/h / PFP30 / 465	=> HS3211 OFF PULSE SWITCHES FIC3211.2 TO AUTOMATIC MODE AND SETPOINT TO 200 Nm3/h

CONTROL VALVES:

CONTROL VALVE, GENERAL
CONTROL GATE VALVE
CONTROL GLOBE VALVE
CONTROL BALL VALVE
SWING CHECK VALVE
BUTTERFLY CONTROL VALVE
THREE LEVER VALVE
ANGEL CONTROL VALVE
3-WAY CONTROL VALVE
4-WAY CONTROL VALVE

DESIGNATION CONTROL VALVE

DESIGNATION SOLENOID VALVE

ACTUATORS:

PNEUMATIC
PNEUMATIC WITH POSITIONER
MOTOR
ELECTRO-MAGNETIC
SOLENOID
CYLINDER, SINGLE ACTING

DESIGNATION CONTROL VALVE WITH SIS FUNCTION

DESIGNATION SOLENOID VALVE WITH SIS FUNCTION

SELF ACTUATING REGULATORS:

SELF - CONTAINED

WITH EXTERNAL TAP

WITH HAND ACTUATOR

ACTUATOR POWER FAILURE:

CONTROL VALVE OPERATING
FC TS

ARROW INDICATES FLOW IN FAIL OPEN POSITION

GUIDE VANES

CONTROL VALVES:

FC FAIL CLOSED
FI FAIL INDETERMINATE
FL FAIL LOCKED
FO FAIL OPEN
FLC FAIL LOCKED WITH TENDANCY TO CLOSE
FLO FAIL OPEN WITH TENDANCY TO OPEN
-LO LIMIT OPEN (OPTION)
-LC LIMIT CLOSE (OPTION)

ACTUATORS:

T1 NOT TIGHT
T2 LEAKAGE CLASS II ACC. TO IEC 60534-4: VERY LOW TIGHTNESS
T3 LEAKAGE CLASS III ACC. TO IEC 60534-4: LOW TIGHTNESS
T4 LEAKAGE CLASS IV ACC. TO IEC 60534-4: STANDARD
T5 LEAKAGE CLASS V ACC. TO IEC 60534-4: TIGHT
T6 LEAKAGE CLASS VI ACC. TO IEC 60534-4: VERY TIGHT
T9 SPECIAL REQUIREMENT (SEE DUTY SPEC)

PRIMARY ELEMENT SYMBOL FOR FLOW:

ORIFICE PLATE
CORIOLIS TYPE
PITOT TUBE
VENTURI TUBE
MAGNETIVE INDUCTIVE FLOW METER

THERMAL TYPE
POSITIVE DISPLACEMENT TYPE
VORTEX SENSOR
TURBINE TYPE
SONIC TYPE
GENERAL SYMBOL, SPECIFY TYPE BY TEXT E.G. WEIR

FE
DESIGNATION PRIMARY ELEMENT

F
VARIABLE AREA FLOW METER

LEVEL MEASUREMENT:

INSTRUMENT WITH TWO PROCESS CONNECTIONS

DIFFERENTIAL PRESSURE TYPE WITH DRY TAPPING POINT

MISCELLANEOUS:

CHEMICAL SEAL

INSTRUMENTATION FIELD MOUNTED LOCAL:

OPERATING
SAFETY

INSTRUMENTATION CENTRAL CONTROL ROOM:

ACCESSIBLE OPERATING
INACCESSIBLE OPERATING
ACCESSIBLE SAFETY
INACCESSIBLE SAFETY

DEVICE OPERATING
DEVICE SAFETY

INSTRUMENTATION LOCAL BOARD:

OPERATING
SAFETY

INSTRUMENT IDENTIFICATION:

1-PIC 2416A.A1
TRACED
ELECTR. TRACED
STEAM TRACED

1-PIC2416A.A1
SUFFIX (OPTION)
SUFFIX FOR REDUNDANT EQUIPMENT (OPTION)
FUNCTION GROUP NUMBER
PROCESS UNIT NUMBER
INSTRUMENT CODE LETTER
TRAIN (OPTION)

INSTRUMENT FUNCTION:

PIC
PSHHH S3H
PAHH A2H
PAH A1H
PAL A1L
PALL A2L
PSLLL S3L

CH4 MEASURED COMPONENT E.G. CH4
C CONDUCTIVITY
PH PH-VALUE
H CALORIFICE VALUE
WO WOOBBE INDEX
SPH SET POINT HIGH
SPN SET POINT NORMAL
SPL SET POINT LOW
ALC AUTOMATIC LOAD CONTROL

FUNCTION DESIGNATION:

ADD
SUBTRACT
MULTIPLY
DERIVATIVE, RATE
TIME DELAY
DIVIDE
EXTRACT SQUARE ROOT
REVERSE
NONLINEAR OR UNSPECIFIED FUNCTION
AND
HIGH SELECT
LOW SELECT
I/P CONVERTOR
INTEGRATE (TIME INTEGRAL)
OR
HIGH LIMITATION
LOW LIMITATION
PROPORTIONAL
TIME FUNCTION
PULSE
AVERAGE
ABSOLUTE VALUE

NOTES:

DATE	ORIGIN.	CHECKED	APPR.	DESCRIPTION	STATUS	ISSUE
22.02.2021	YS	GK	DJ	ISSUED FOR NUMERICAL PIPING DESIGN	D1	01

Linde GmbH DD - Linde Engineering Dresden, D-01277 Dresden

Linde

PROJ.NO. 3710448M

BUCKS

PIPING AND INSTRUMENT DIAGRAM
PCC PLANT FOR NGCC POWER PLANT
SYMBOLS AND ABBREVIATIONS II

DOC.NO. &AE P-FB 0003 (EN)

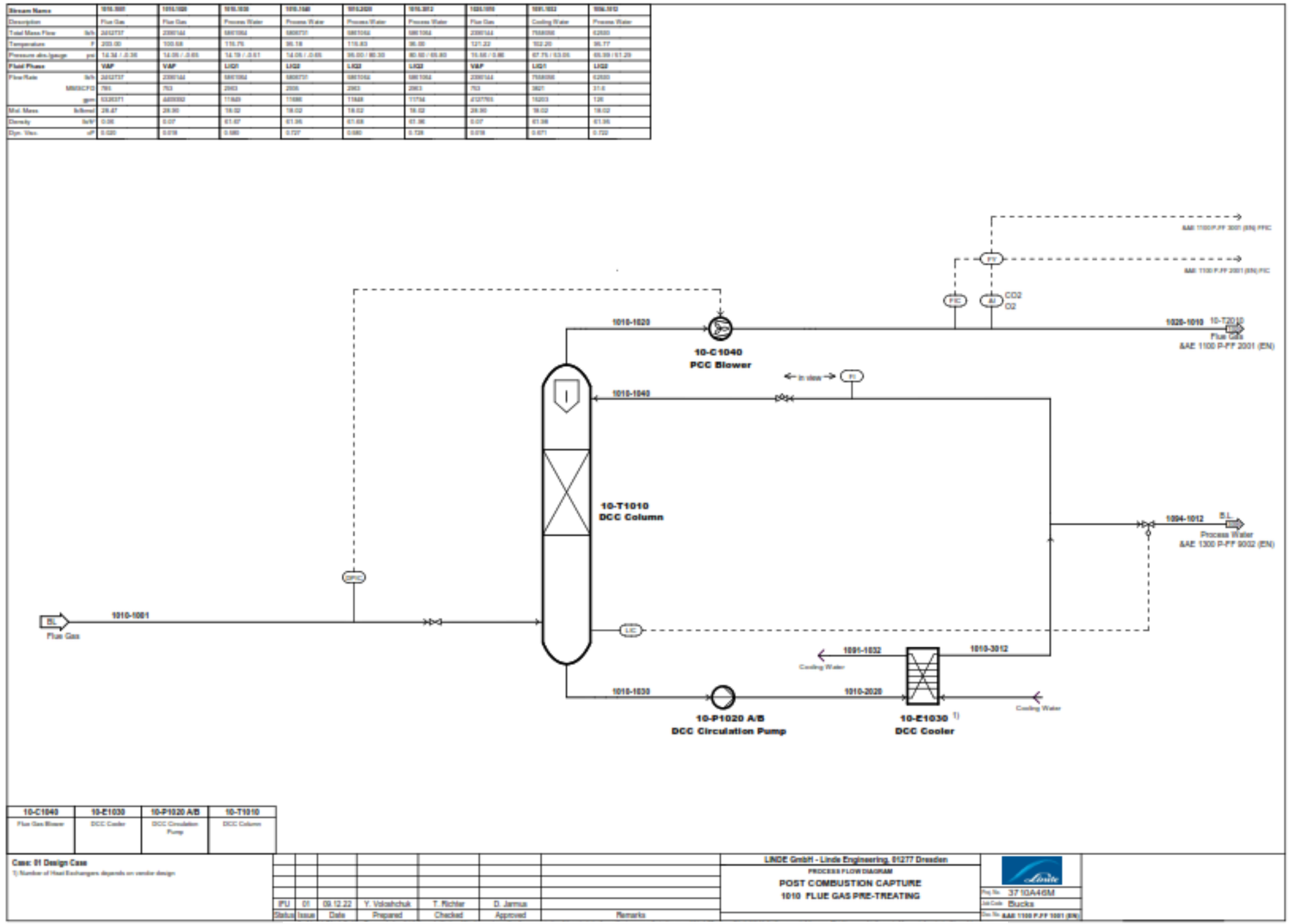
10-C1040
PCC Blower
10-T1010
DCC Column
10-P1020 A/B
DCC Circulation Pump
10-E1030 1)
DCC Cooler
1010-1020
1010-1040
1010-1001
1010-1030
1010-2020
1010-3012
1091-1032
1094-1012
1020-1010
10-T2010
Flue Gas
Process Water
Cooling Water
CO2
O2
Case: 01 Design Case
1) Number of Heat Exchangers depends on vendor design
LINDE GmbH - Linde Engineering, 01277 Dresden
PROCESS FLOW DIAGRAM
POST COMBUSTION CAPTURE
1010 FLUE GAS PRE-TREATING
Status
Issue
Date
Prepared
Checked
Approved
Remarks
Bucks

Stream Name		1020_1010	1020_1020	1020_1030	1020_1040	1020_1050	1020_2011	1024_4010	1020_4013	1020_5012	1020_5013	1020_4020	1024_7410	1091_2033	1091_2052	1097_1010
Description		Flue Gas	Treated Gas	Rich Solution	Process Water	Lean Solution	Lean Solution	Process Water	Process Water	Rich Solution	Lean Solution	Flash Gas	Lean Solution	Cooling Water	Cooling Water	Demineralized Water
Total Mass Flow	lb/h	2330144	2166138	3723679	6756863	3676733	3676733	6736970	6940989	3723679	3676733	2190	3676673	44727135	9033798	16893
Temperature	F	121.22	108.10	108.55	102.61	104.00	122.15	123.87	96.00	223.19	236.25	196.02	122.15	98.27	102.20	68.00
Pressure abs./gauge	psi	15.66 / 0.96	14.69 / -0.01	16.46 / 0.76	14.69 / -0.01	14.69 / -0.01	329.62 / 314.82	69.60 / 53.80	733.43 / 718.73	736.26 / 723.56	173.03 / 158.33	15.66 / 0.96	165.78 / 151.08	87.76 / 72.06	87.76 / 72.06	95.00 / 80.30
Fluid Phase		VAP	VAP	LIQ1	LIQ2	LIQ1	LIQ1	L-Q2	LIQ2	LIQ1	LIQ1	VAP	LIQ1	LIQ1	LIQ1	LIQ2
Flow Rate	lb/h	2330144	2166138	3723679	6756863	3676733	3676733	6736970	6940989	3723679	3676733	2190	3676673	44727135	9033798	16893
	MMSCFD	753	713	1221	3676	1168	1168	3688	2548	1221	1168	0.72	737	2261	4567	9.6
	gpm	4127705	4040908	6716	13577	6663	6634	13546	10743	6979	6977	3229	663	8069	18171	38
Mol. Mass	lb/lbmol	28.90	27.70	27.78	18.02	27.10	27.10	18.02	18.02	27.78	27.10	38.20	27.10	18.02	18.02	18.02
Density	lb/ft³	0.07	0.07	69.12	61.85	66.74	66.34	61.55	61.96	66.52	62.13	0.09	66.34	62.03	61.98	62.30
Dyn. Visc.	cP	0.018	0.018	0.716	0.869	0.333	0.407	0.535	0.729	1.366	0.877	0.017	0.407	0.752	0.871	1.065

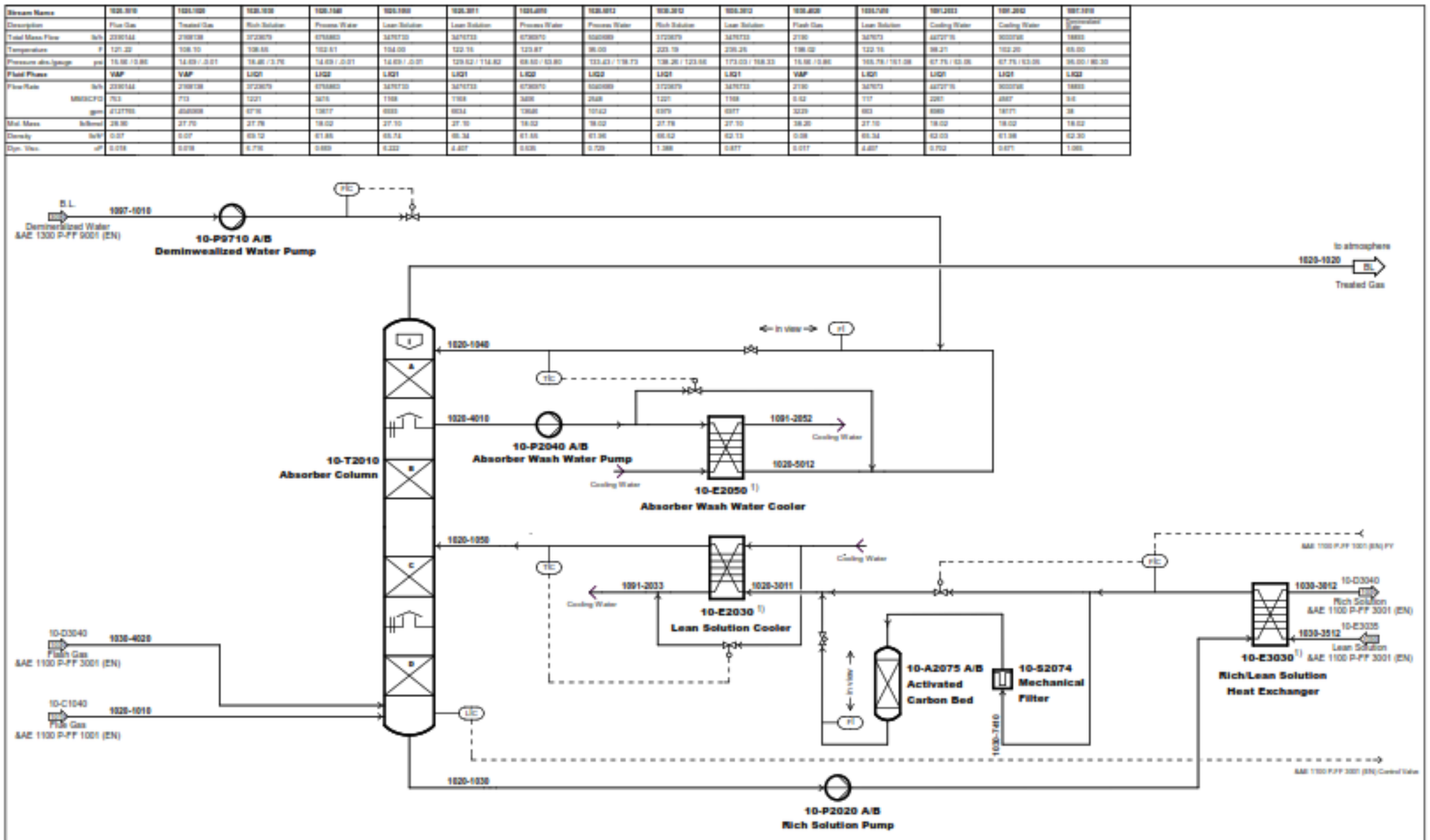

10-A2075 A/B	10-E2030	10-E2050	10-E3030	10-P2020 A/B	10-P2040 A/B	10-P9710 A/B	10-S2074	10-T2010
Activated Carbon Bed	Lean Solution Cooler	Absorber Wash Water Cooler	Rich/Lean Solution Heat Exchanger	Rich Solution Pump	Absorber Wash Water Pump	Demineralized Water Pump	Mechanical Filter	Absorber Column

Case: 01 Design Case

1) Number of Heat Exchangers depends on vendor design

IFU	01	09.12.22	Y. Voloshchuk	T. Richter	D. Jarmus	
Status	Issue	Date	Prepared	Checked	Approved	Remarks

LINDE GmbH - Linde Engineering, 01277 Dresden

PROCESS FLOW DIAGRAM

POST COMBUSTION CAPTURE

1020 CO2 ABSORPTION

Proj.No: 3710A46M

Job Code: Bucks

Doc.No: SAE 1100 P-FF 2001 (EN)

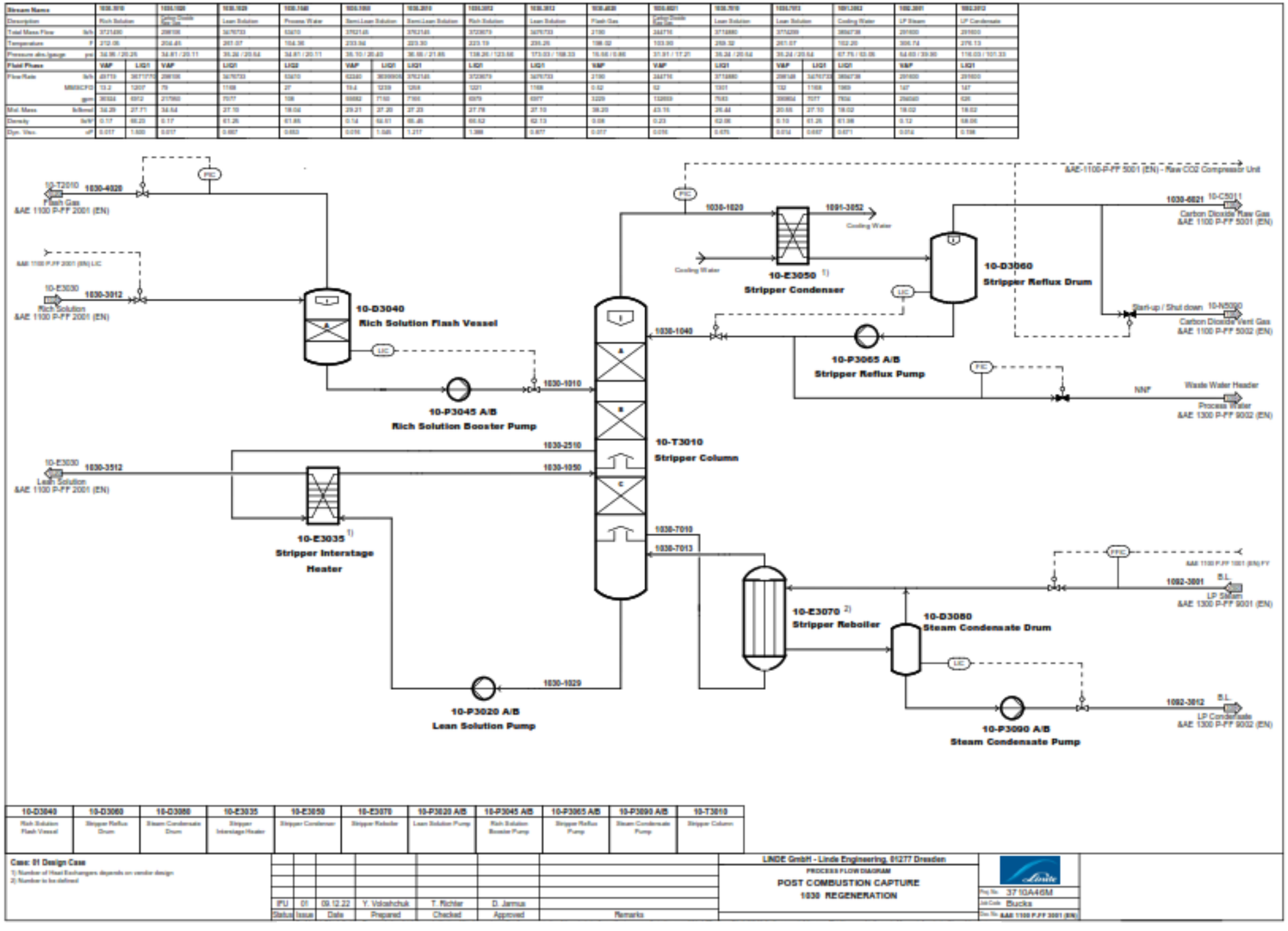
10-T2010
1030-4020
Flash Gas
ΔAE 1100 P-FF 2001 (EN)
10-E3030
1030-3012
Rich Solution
ΔAE 1100 P-FF 2001 (EN)
10-D3040
Rich Solution Flash Vessel
10-P3045 A/B
Rich Solution Booster Pump
1030-1010
1030-2510
1030-1050
10-E3030
1030-3512
Lean Solution
ΔAE 1100 P-FF 2001 (EN)
10-E3035 1)
Stripper Interstage Heater
10-T3010
Stripper Column
1030-7010
1030-7013
1030-1029
10-P3020 A/B
Lean Solution Pump
1030-1020
1091-3052
Cooling Water
10-E3050 1)
Stripper Condenser
10-D3060
Stripper Reflux Drum
1030-1040
10-P3065 A/B
Stripper Reflux Pump
ΔAE-1100-P-FF 5001 (EN) - Raw CO2 Compressor Unit
1030-6821
10-C5011
Carbon Dioxide Raw Gas
ΔAE 1100 P-FF 5001 (EN)
Start-up / Shut down
10-N5030
Carbon Dioxide Vent Gas
ΔAE 1100 P-FF 5002 (EN)
NNF
Waste Water Header
Process Water
ΔAE 1300 P-FF 9002 (EN)
10-E3070 2)
Stripper Reboiler
10-D3080
Steam Condensate Drum
1092-3001
LP Steam
ΔAE 1300 P-FF 9001 (EN)
1092-3012
LP Condensate
ΔAE 1300 P-FF 9002 (EN)
10-P3090 A/B
Steam Condensate Pump
10-D3040 Rich Solution Flash Vessel
10-D3060 Stripper Reflux Drum
10-D3080 Steam Condensate Drum
10-E3035 Stripper Interstage Heater
10-E3050 Stripper Condenser
10-E3070 Stripper Reboiler
10-P3020 A/B Lean Solution Pump
10-P3045 A/B Rich Solution Booster Pump
10-P3065 A/B Stripper Reflux Pump
10-P3090 A/B Steam Condensate Pump
10-T3010 Stripper Column
Case: 01 Design Case
1) Number of Heat Exchangers depends on vendor design
2) Number to be defined
IFU 01 09.12.22 Y. Volzatchuk T. Richter D. Jamsa
Status Issue Date Prepared Checked Approved Remarks
LINDE GmbH - Linde Engineering, 01277 Dresden
PROCESS FLOW DIAGRAM
POST COMBUSTION CAPTURE
1030 REGENERATION
Proj.No. 3710A46M
Job Code Bucks
Doc.No. ΔAE 1100 P-FF 3001 (EN)

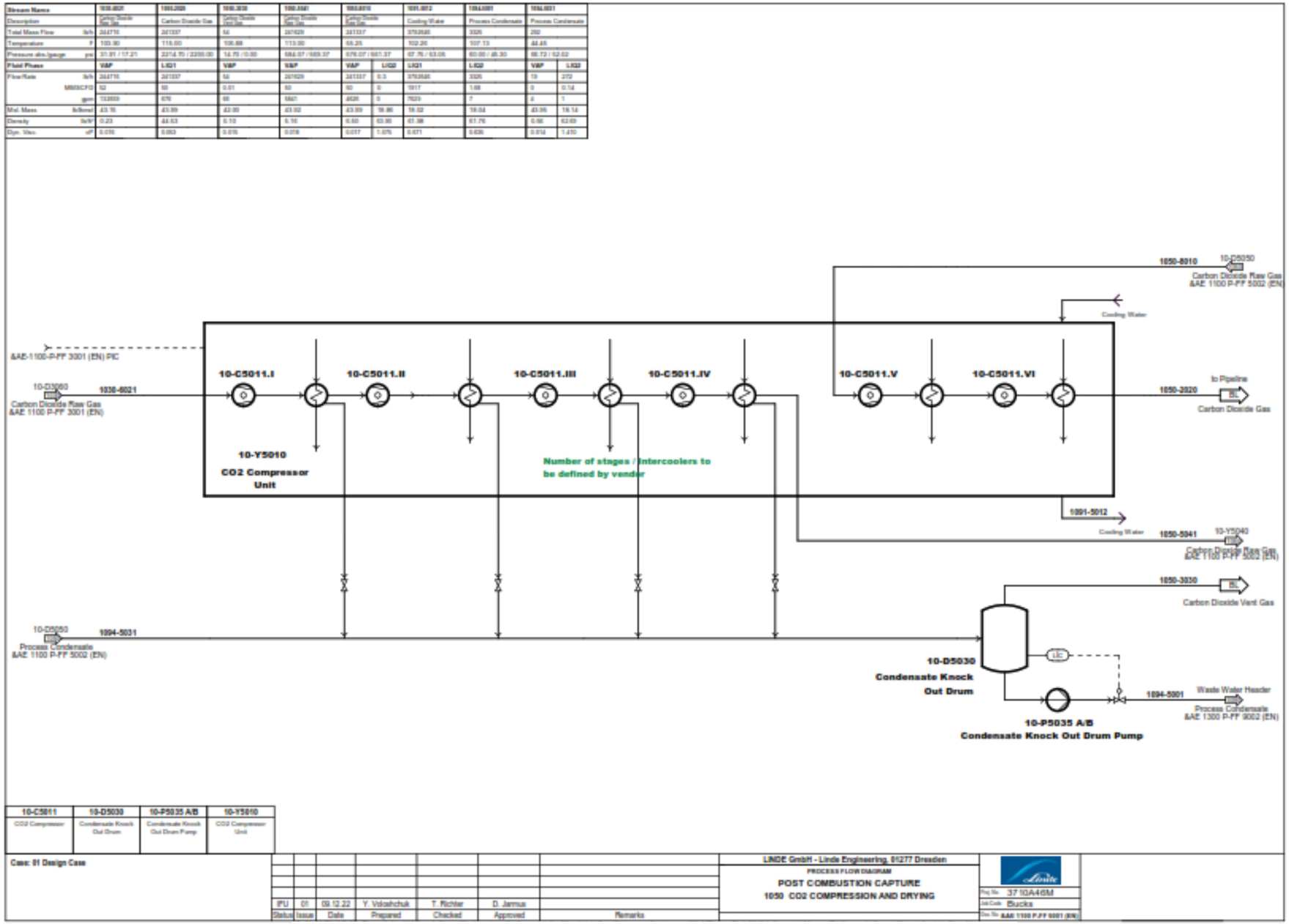
10-C5011.I
10-C5011.II
10-C5011.III
10-C5011.IV
10-C5011.V
10-C5011.VI
10-Y5010
CO2 Compressor Unit
Number of stages / Intercoolers to be defined by vendor
10-D5030
Condensate Knock Out Drum
10-P5035 A/B
Condensate Knock Out Drum Pump
Carbon Dioxide Gas
Carbon Dioxide Vent Gas
Process Condensate
Waste Water Header
Cooling Water
Case: 01 Design Case
LINDE GmbH - Linde Engineering, 01277 Dresden
PROCESS FLOW DIAGRAM
POST COMBUSTION CAPTURE
1050 CO2 COMPRESSION AND DRYING
Bucks

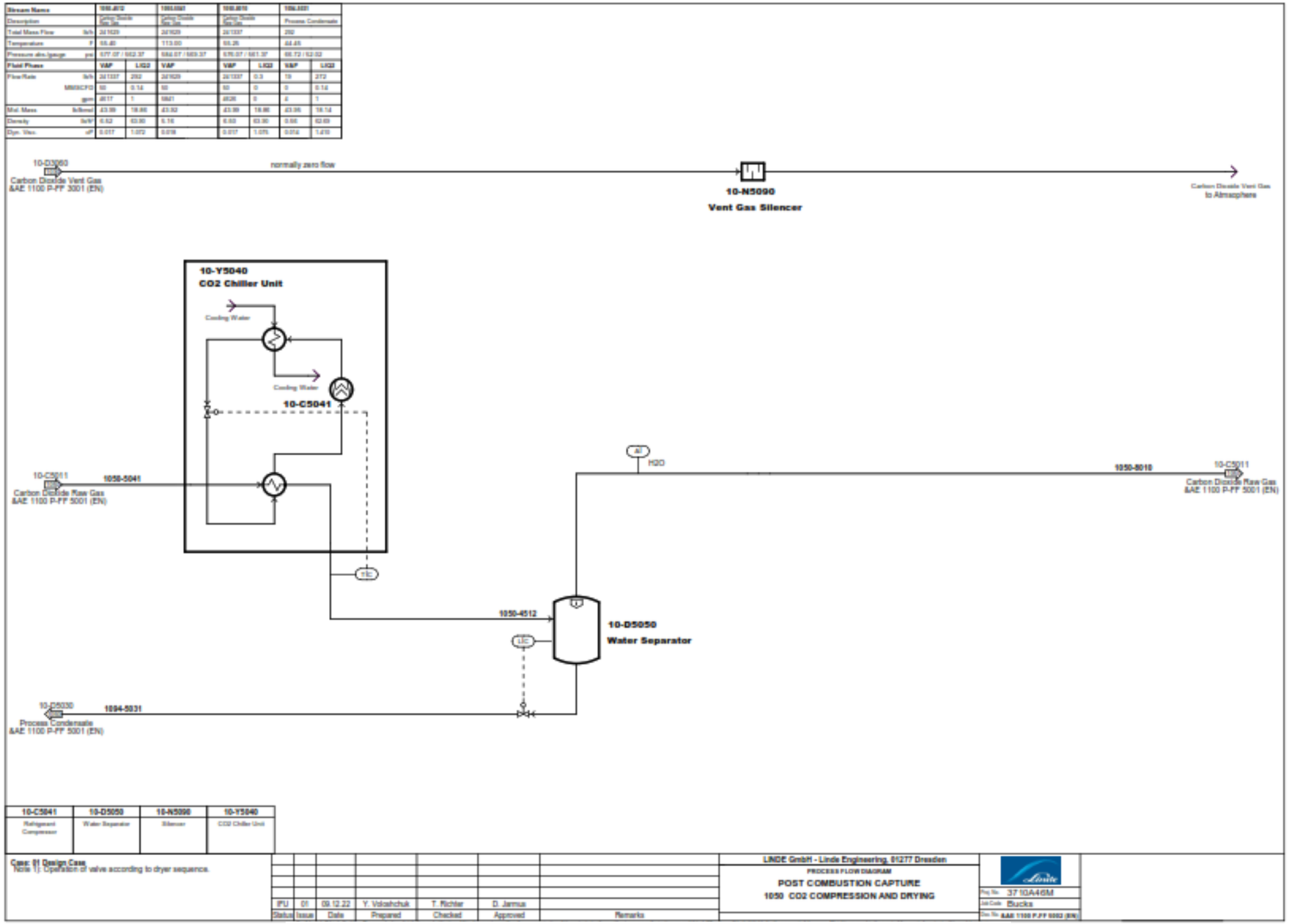
10-D3060
Carbon Dioxide Vent Gas
&AE 1100 P-FF 3001 (EN)
normally zero flow
10-N5090
Vent Gas Silencer
Carbon Dioxide Vent Gas
to Atmosphere
10-Y5040
CO2 Chiller Unit
Cooling Water
Cooling Water
10-C5041
10-C5011
Carbon Dioxide Raw Gas
&AE 1100 P-FF 5001 (EN)
1050-5041
AI
H2O
1050-8010
10-C5011
Carbon Dioxide Raw Gas
&AE 1100 P-FF 5001 (EN)
TIC
1050-4512
LIC
10-D5050
Water Separator
10-D5030
Process Condensate
&AE 1100 P-FF 5001 (EN)
1094-5031
10-C5041
Refrigerant Compressor
10-D5050
Water Separator
10-N5090
Silencer
10-Y5040
CO2 Chiller Unit
Case: 01 Design Case
Note 1): Operation of valve according to dryer sequence.
IFU
Status
01
Issue
09.12.22
Date
Y. Voloshchuk
Prepared
T. Richter
Checked
D. Jamua
Approved
Remarks
LINDE GmbH - Linde Engineering, 01277 Dresden
PROCESS FLOW DIAGRAM
POST COMBUSTION CAPTURE
1050 CO2 COMPRESSION AND DRYING
Proj.No. 37.10A46M
Job Code Bucks
Doc.No. &AE 1100 P-FF 5002 (EN)

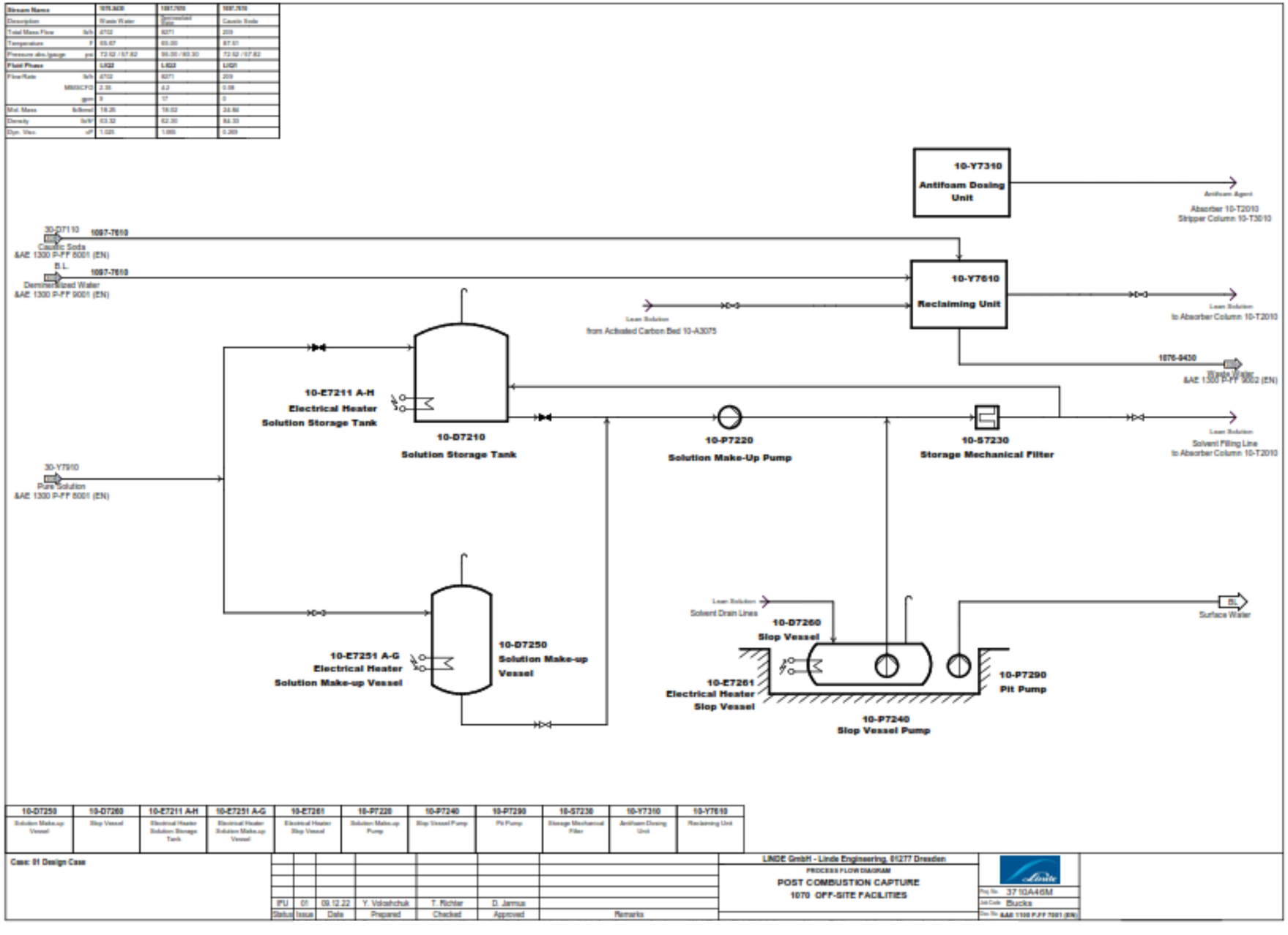
10-Y7310
Antifoam Dosing Unit
Antifoam Agent
Absorber 10-T2010
Stripper Column 10-T3010
30-DT110
1097-7610
Caustic Soda
&AE 1300 P-FF 8001 (EN)
B.L.
1097-7610
Demineralized Water
&AE 1300 P-FF 9001 (EN)
10-Y7610
Reclaiming Unit
Lean Solution
from Activated Carbon Bed 10-A3075
Lean Solution
to Absorber Column 10-T2010
1076-8430
Waste Water
&AE 1300 P-FF 8002 (EN)
10-E7211 A-H
Electrical Heater
Solution Storage Tank
10-D7210
Solution Storage Tank
10-P7220
Solution Make-Up Pump
10-S7230
Storage Mechanical Filter
Lean Solution
Solvent Filling Line
to Absorber Column 10-T2010
30-YT910
Pure Solution
&AE 1300 P-FF 8001 (EN)
10-E7251 A-G
Electrical Heater
Solution Make-up Vessel
10-D7250
Solution Make-up Vessel
Lean Solution
Solvent Drain Lines
10-D7260
Slop Vessel
BL
Surface Water
10-E7261
Electrical Heater
Slop Vessel
10-P7290
Pit Pump
10-P7240
Slop Vessel Pump
10-D7250
10-D7260
10-E7211 A-H
10-E7251 A-G
10-E7261
10-P7220
10-P7240
10-P7290
10-S7230
10-Y7310
10-Y7610
Case: 01 Design Case
IFU
Status
01
Issue
09.12.22
Date
Y. Volokhchuk
Prepared
T. Richter
Checked
D. Jamsa
Approved
Remarks
LINDE GmbH - Linde Engineering, 01277 Dresden
PROCESS FLOW DIAGRAM
POST COMBUSTION CAPTURE
1070 OFF-SITE FACILITIES
Proj.No. 37 10A46M
Job Code Bucks
Doc.No. &AE 1100 P-FF 7001 (EN)

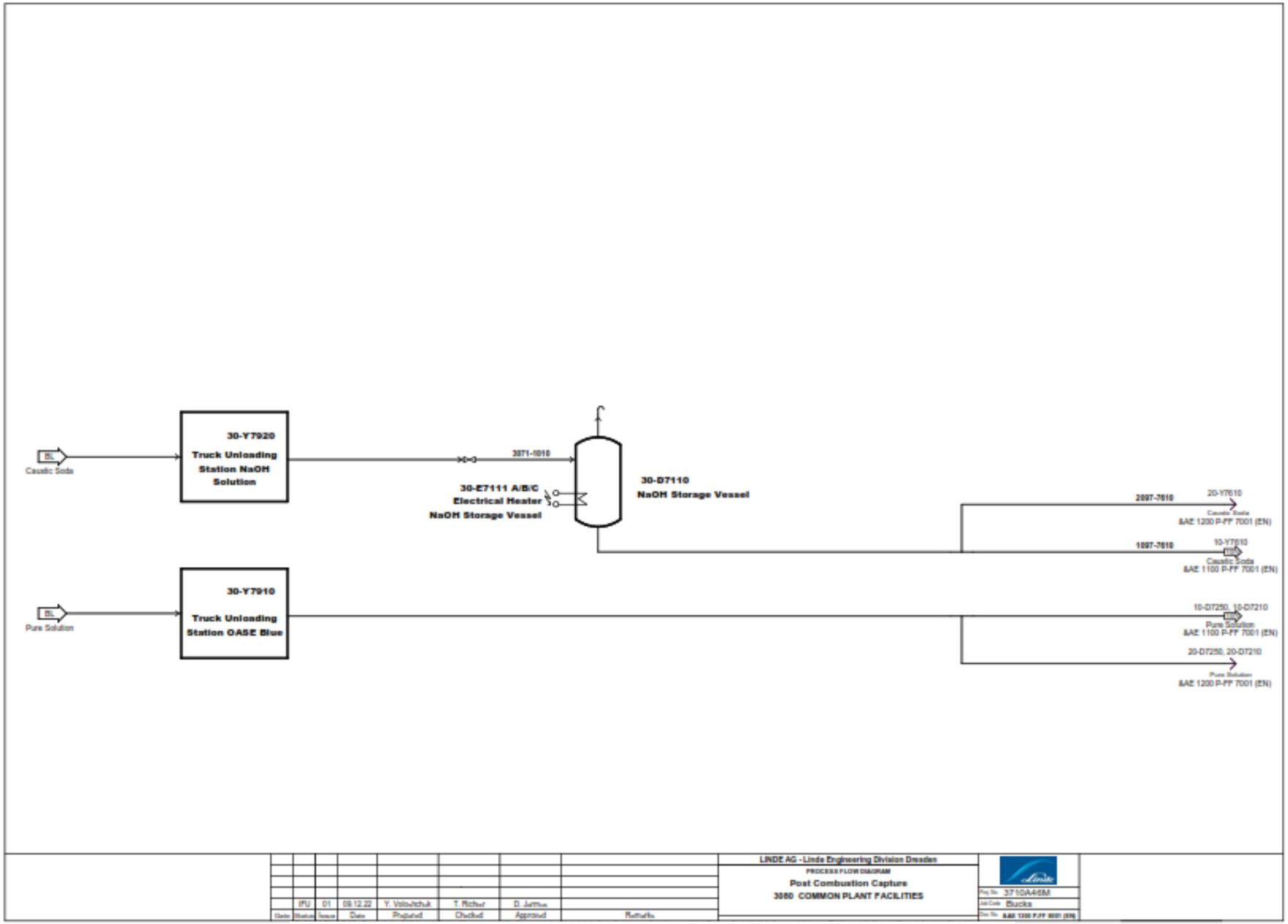
BL
Caustic Soda
30-Y7920
Truck Unloading Station NaOH Solution
3071-1010
30-E7111 A/B/C
Electrical Heater
NaOH Storage Vessel
30-D7110
NaOH Storage Vessel
2097-7010
20-Y7610
Caustic Soda
&AE 1200 P-FF 7001 (EN)
1097-7010
10-Y7610
Caustic Soda
&AE 1100 P-FF 7001 (EN)
BL
Pure Solution
30-Y7910
Truck Unloading Station OASE Blue
10-D7250, 10-D7210
Pure Solution
&AE 1100 P-FF 7001 (EN)
20-D7250, 20-D7210
Pure Solution
&AE 1200 P-FF 7001 (EN)
LINDE AG - Linde Engineering Division Dresden
PROCESS FLOW DIAGRAM
Post Combustion Capture
3080 COMMON PLANT FACILITIES
Proj.No. 3710A46M
Unit Code Bucks
Doc.No. &AE 1300 PJFF 8001 (EN)
(PU) 01 09.12.22 Y. Volovitchuk T. Richter D. Jaffrin
Gate Status Issue Date Prepared Checked Approved Remarks

Stream Name		1091-1001	1092-3001	1097-1010	1097-7610	2091-1001	2092-3001	2097-1010	2097-7610	3090-1001	3095-1001	3097-1001
Description		Cooling Water	LP Steam	Demineralized Water	Demineralized Water	Cooling Water	LP Steam	Demineralized Water	Demineralized Water	Instrument Gas	Potable Water	Demineralized Water
Total Mass Flow	lb/h	28711301	291600	18893	8271	28711301	291600	18893	8271	1426	17992	54329
Temperature	F	86.00	306.74	65.00	65.00	86.00	306.74	65.00	65.00	80.00	80.00	65.00
Pressure abs./gauge	psi	75.00 / 60.30	54.60 / 39.90	95.00 / 80.30	95.00 / 80.30	75.00 / 60.30	54.60 / 39.90	95.00 / 80.30	95.00 / 80.30	104.70 / 90.00	58.02 / 43.32	95.00 / 80.30
Fluid Phase		**LIQ1**	**VAP**	**LIQ2**	**LIQ2**	**LIQ1**	**VAP**	**LIQ2**	**LIQ2**	**VAP**	**LIQ1**	**LIQ2**
Flow Rate	lb/h	28711301	291600	18893	8271	28711301	291600	18893	8271	1426	17992	54329
	MMSCFD	14036	147	9.6	4.2	14036	147	9.6	4.2	0.45	9.1	27.5
	gpm	57655	294540	38	17	57655	294540	38	17	338	36	109
Mol. Mass	lb/lbmol	18.02	18.02	18.02	18.02	18.02	18.02	18.02	18.02	28.97	18.02	18.02
Density	lb/ft³	62.17	0.12	62.30	62.30	62.17	0.12	62.30	62.30	0.62	62.17	62.30
Dyn. Visc.	cP	0.811	0.014	1.065	1.065	0.811	0.014	1.065	1.065	0.019	0.811	1.065

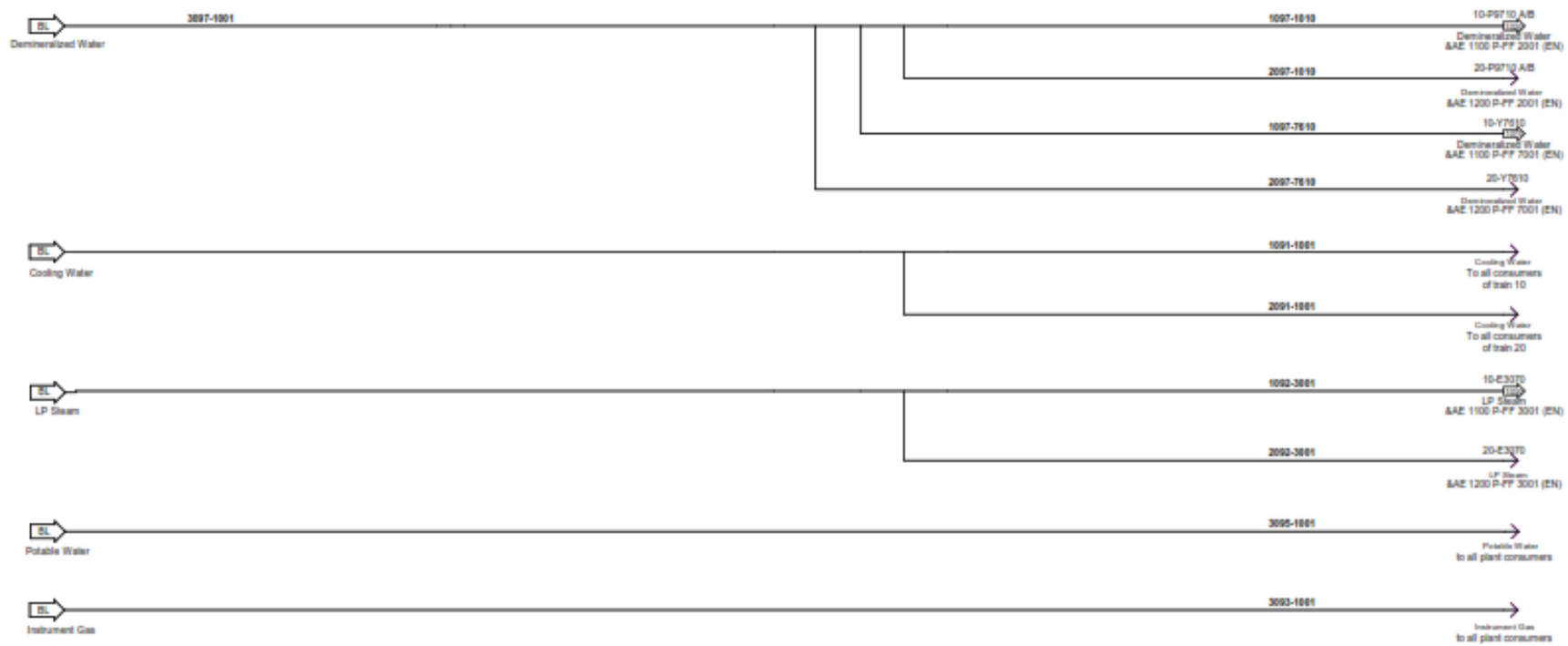

Case: 01 Design Case

IFU	01	09.12.22	Y. Voloshchuk	T. Richter	D. Jarmus	
Status	Issue	Date	Prepared	Checked	Approved	Remarks

LINDE GmbH - Linde Engineering, 01277 Dresden

PROCESS FLOW DIAGRAM

POST COMBUSTION CAPTURE

3090 UTILITIES & EFFLUENTS

Proj. No. 3710A46M

Job Code Bucks

Doc. No. &AE 1300 P-FF 9001 (EN)

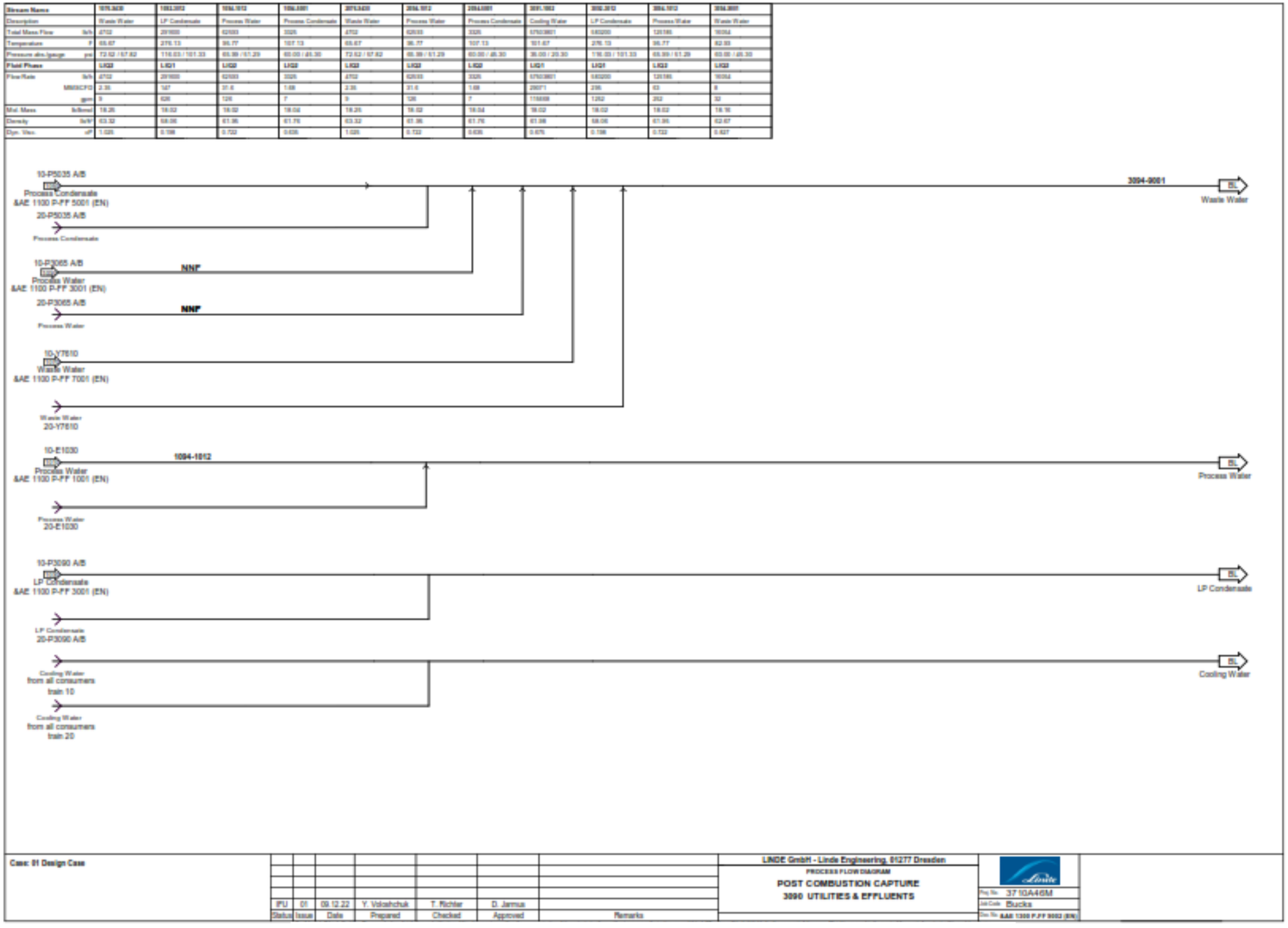
10-P5035 A/B
Process Condensate
&AE 1100 P-FF 5001 (EN)
20-P5035 A/B
Process Condensate
3094-9001
BL
Waste Water
10-P3065 A/B
Process Water
&AE 1100 P-FF 3001 (EN)
NNF
20-P3065 A/B
Process Water
NNF
10-Y7610
Waste Water
&AE 1100 P-FF 7001 (EN)
Waste Water
20-Y7610
10-E1030
Process Water
&AE 1100 P-FF 1001 (EN)
1094-1012
Process Water
20-E1030
BL
Process Water
10-P3090 A/B
LP Condensate
&AE 1100 P-FF 3001 (EN)
LP Condensate
20-P3090 A/B
BL
LP Condensate
Cooling Water
from all consumers
train 10
Cooling Water
from all consumers
train 20
BL
Cooling Water
Case: 01 Design Case
IFU
Status
01
Issue
09.12.22
Date
Y. Voloshchuk
Prepared
T. Richter
Checked
D. Jamua
Approved
Remarks
LINDE GmbH - Linde Engineering, 01277 Dresden
PROCESS FLOW DIAGRAM
POST COMBUSTION CAPTURE
3090 UTILITIES & EFFLUENTS
Proj.No. 37.10A46M
Job Code Bucks
Doc.No. &AE 1300 P-FF 9002 (EN)

Appendix I

ISBL Equipment List

This space intentionally left blank

Appendix J

ISBL Electrical Load List

This space intentionally left blank

Appendix K

General Electrical Design Specification

Plant Description: **CO2 Capture & Compression Plant**		
Linde Project No. **3710 A46M**	Client Project No. **-**	
Linde Project Code **Bucks_FEED**	Client Project Code **-**	
Linde Doc. No. **&AE-E-PA 211.1001 (EN)**	Client Doc. No. **-**	Client Revision **-**

General Electrical Design Specification

X	1.0	06.04.2023	S. Geisler, ENE	H. Skirlo, ENE	D. Jarmus, PM	
Status	**Issue**	**Date**	**Prepared**	**Reviewed**	**Approved**	**Remarks**

Linde Project No:	3710 A46M	Linde Issue	Client Project No:	-	Client Rev.
Linde Doc No:	&AE-E-PA 211.1001 (EN)	1.0	Client Doc No:	-	-

CONTENT

1	**GENERAL**	**4**
2	**DEFINITIONS AND ABBREVIATIONS**	**4**
3	**SCOPE OF SUPPLY AND SERVICES**	**5**
3.1	Scope of supply	5
3.2	Battery limits	5
3.3	Completeness	5
4	**STANDARDS AND CODES**	**6**
4.1	National and local standards and codes	6
4.2	COMPANY's Specifications	6
4.3	Contradictions in regulations	6
4.4	Deviations in SUB-CONTRACTOR's bid	6
5	**TECHNICAL REQUIREMENTS**	**7**
5.1	System design	7
5.1.1	General	7
5.1.2	Electrical codes	7
5.1.3	Design calculations and studies	7
5.1.4	System protection and coordination (protective relaying)	7
5.1.5	Utility-interface parameters and system parameters	7
5.1.6	Steady state voltage (max. voltage drops)	9
5.1.7	Motor starting voltage drop	9
5.1.8	Load status (load category)	10
5.1.9	Operation duty	10
5.1.10	Load calculation (Load assessment and electricity calculation)	10
5.1.11	Spare and space philosophy; spare parts	11
5.1.12	Power factor	11
5.2	Electrical area classification and explosion protection methods	11
5.3	Power distribution (configuration of power systems)	11
5.3.1	General system configuration	11
5.3.2	Emergency power supply (optional)	12
5.3.3	Automatic transfer system (ATS)	12
5.3.4	Control	13
5.3.5	Electrical substations and transformer stations	13
5.4	Transformers	14
5.4.1	Power transformers	14
5.4.2	Distribution transformers	14
5.5	Motor controls	14
5.5.1	General design conditions	14
5.6	MV-switchgears	15
5.6.1	LV-switchgears and MCCs	15

Linde Project No:	3710 A46M	Linde Issue	Client Project No:	-	Client Rev.
Linde Doc No:	&AE-E-PA 211.1001 (EN)	1.0	Client Doc No:	-	-

5.6.2	Local control facilities	16
5.7	Motors	16
5.7.1	MV-motors	16
5.7.2	LV-motors	16
5.8	Grounding	17
5.8.1	General conditions	17
5.8.2	Equipment earthing	17
5.8.3	Electrical equipment grounding	18
5.8.4	Electrical system earthing	18
5.8.5	Lightning and surge protection	18
5.8.6	Static control grounding	18
5.9	Lighting	19
5.9.1	General conditions	19
5.9.2	Lighting intensities	19
5.9.3	Aircraft warning lights	19
5.10	Receptacles (socket outlets)	19
5.11	Cable and wiring	20
5.11.1	Cable runs	20
5.11.2	Cable types	20
5.12	Electrical heat tracing	21
5.13	Cathodic protection	21
5.14	Communication system	21
6	**DESIGN PROCEDURES**	**21**
6.1	General requirements	21
6.2	Design documentation	21
7	**DOCUMENTATION**	**21**
8	**INSPECTION**	**22**

Linde Project No:	**3710 A46M**	Linde Issue	Client Project No:	-	Client Rev.
Linde Doc No:	**&AE-E-PA 211.1001 (EN)**	**1.0**	Client Doc No:	-	-

1 GENERAL

This specification addresses requirements for different engineering phases (Concept, Feed, Basic, Detail) for the design and performance of the electrical systems and facilities, together with the applicable standards and codes of the process plant.

In no way does this specification supersede the referenced standards and codes, except the requirements herein are more stringent.

Compliance by SUB-CONTRACTOR with the provisions of this specification does not relieve him of the responsibility of supplying equipment and material, electrically and mechanically suited to meet the specified service conditions.

This document does not define the project scope; the purpose of this criterion is to ensure consistency, high quality, electrically safe and cost effective design of the electrical system. This document defines the general basis for the electrical design and the selection of electrical equipment. Specific equipment requirements are covered in the related electrical equipment specifications.

The electrical equipment shall be selected and designed to perform its intended function as given in the Project Basis of Design &AE-0000-A-SD 1001 (EN).

2 DEFINITIONS AND ABBREVIATIONS

The following general project definitions and abbreviations apply for this document:

Term	Abbr.	Explanation
COMPANY		the client of a future, real PROJECT
CONTRACTOR	Linde	Linde Engineering Dresden
PROJECT		the activities to be performed by CONTRACTOR in accordance with its Scope of Work defined in the Proposal or Contract
shall		indicates a mandatory requirement with defined exceptions, if any
SUPPLIER		an external party who has entered into an agreement with CONTRACTOR for the supply of goods, possibly also including services, in connection with the PROJECT
SUB-CONTRACTOR		an external party who has entered into an agreement with CONTRACTOR for the supply of services, especially for construction works, possibly also including supply of goods, in connection with the PROJECT

Additionally, the following definitions and abbreviations also apply for this document:

Term	Abbr.	Explanation
MANUFACTURER		shall mean the manufacturer to whom the order for equipment has been awarded for supplying and providing equipment
Electrical Substation		Room where the electrical cabinets (e.g. switch gears) of the process plant are located
Abbreviations:		
->	HV	High Voltage (> 50kV)
->	MV	Medium Voltage (1 … 50kV)
->	LV	Low Voltage (< 1kV)
->	MCC	Motor Control Centre
->	SDB	Sub Distribution Board
->	UPS	Uninterrupted Power Supply (AC, DC)
->	CT	Current transformer
->	PT	Potential transformer (also called voltage transformer)
->	PVC	Polyvinyl chloride
->	XLPE	cross-linked Polyethylene

Linde Project No:	3710 A46M	Linde Issue	Client Project No: -	Client Rev.
Linde Doc No:	&AE-E-PA 211.1001 (EN)	1.0	Client Doc No: -	-

Term	Abbr.	Explanation
->	LCS	Local Control Station
->	NLTC	No load tap changer
->	OLTC	On load tap changer
->	HRC fuse	High-Rupturing-Capacity fuse
->	VSI, CSI, LCI	Voltage Source Inverter, Current Source Inverter, Load Commutated Inverter
->	HPS	High Pressure Sodium
->	AIS	Air Insulated Switchgear
->	GIS	Gas Insulated Switchgear
->	SIL	Safety Integrity Level
->	CCR	Central control room
->	DCS	Distributed control system
->	HVAC	Heating, Ventilation and Air Conditioning

3 SCOPE OF SUPPLY AND SERVICES

3.1 Scope of supply

The following items shall be included in CONTRACTOR's scope of supply and services for process plant:

1) Hardware supply for electrical equipment and systems
2) Complete engineering and documentation for electrical equipment and systems
3) Spare parts for installation and commissioning
4) Special tools
5) Inspection and testing of equipment and systems at workshops
6) Installation supervision at plant site for equipment and systems
7) Commissioning supervision only at plant site for equipment and systems
8) Training of COMPANY's personnel (on demand only)

3.2 Battery limits

The following battery limits shall apply for CONTRACTOR's scope of supply:

9) See also &AE-E-ZQ 213.1001 Principle Electrical Single Line Diagram
10) See also &AE-E-LM 212.1001 Electrical Load List

3.3 Completeness

The process plant has to be designed in accordance with sound engineering practice.

In case the SUB-CONTRACTOR detects during detail design any deviation, modification and/or improvement, which is absolutely necessary to accomplish the job in accordance with sound engineering practice and design requirements, the SUB-CONTRACTOR shall be responsible for the corresponding adapted scope of supply and work as part of his original contractual obligations. In any case this shall be brought to the attention of CONTRACTOR and COMPANY.

All devices which are not explicitly mentioned but necessary for a safe installation and a safe and continuous operation of the connected systems and consumers shall be included in the scope of SUB-CONTRACTOR.

Linde Project No:	3710 A46M	Linde Issue	Client Project No:	-	Client Rev.
Linde Doc No:	&AE-E-PA 211.1001 (EN)	1.0	Client Doc No:	-	-

4 STANDARDS AND CODES

The applicable sections of the following standards, codes and specifications in their latest edition shall apply for design and performance of the system, equipment concerned drawings and documentation, manufacturing and testing. The US system shall be applied.

Local laws have to be considered according legal requirements.

4.1 National and local standards and codes

USA: ANSI American National standards)
IEEE (Institute of Electrical and Electronics Engineers)
NEC (National Electric Code)
NEMA (National Electric Manufacturers Association)
NFPA (National Fire Protection Association)
OSHA (Occupational Safety and Health Administration)

4.2 COMPANY's Specifications

COMPANY's specifications if applicable.

4.3 Contradictions in regulations

If there should be, in the opinion of SUB-CONTRACTOR, any conflicts between the relevant standards and codes, COMPANY's data sheet(s) and this specification, then these contradictions shall immediately be brought to the attention of CONTRACTOR and COMPANY.

The order of precedence of specifications and codes is as follows:

1) Data Sheet(s)
2) COMPANY's specifications if applicable
3) This specification
4) Codes and Standards

4.4 Deviations in SUB-CONTRACTOR's bid

It shall be SUB-CONTRACTOR's responsibility to declare a proposed deviation from CONTRACTOR and COMPANY's specified design requirements with a design clarification and deviation note attached to SUB-CONTRACTOR's bid.

All deviations required by SUB-CONTRACTOR shall be supported by valid technical reasons. Should SUB-CONTRACTOR consider that a requirement can be met technically but not directly in accordance with the referenced documents above, but nevertheless providing the same level of quality, those deviations shall be informed to CONTRACTOR and COMPANY.

In the absence of a deviation list it is assumed that the SUB-CONTRACTOR complies fully with CONTRACTOR and COMPANY's requirements.

Linde Project No:	3710 A46M	Linde Issue	Client Project No:	-	Client Rev.
Linde Doc No:	&AE-E-PA 211.1001 (EN)	1.0	Client Doc No:	-	-

5 TECHNICAL REQUIREMENTS

5.1 System design

5.1.1 General

The complete electrical system shall be designed with personnel safety as a primary consideration. In addition, the system shall be designed for continuous and reliable service, equipment safety, ease of maintenance and operation, mechanical protection of equipment, interchange ability of equipment.

The equipment design shall minimize the risk of mal-operations that could result in personal injury or mechanical damage.

5.1.2 Electrical codes

See paragraph 4 STANDARDS AND CODES

5.1.3 Design calculations and studies

5.1.3.1 General

During engineering phases the following calculations and studies to be performed:

- Load calculation
- Voltage drop calculation for start of large motors
- Short circuit calculation
- Selectivity co-ordination study (discrimination study)**Tools for studies and technical calculation**

Professional software (e.g. ETAP) will be used to determine the short circuit capacities, load flows, voltage drops and harmonic distortions necessary in determining proper system and equipment sizing.

5.1.4 System protection and coordination (protective relaying)

1) Solid state, microprocessor based multifunction protective relays with programmable release characteristics will be employed for protection of the electrical power generation and distribution system and electric motors on MV level.

2) Relays in MV- systems will be of the state of art.
To minimise the damages in MV-systems, during faults, short clearing times will be achieved, e.g. by communication links between relays and their back-up protection relays, without losing selectivity.

3) For LV-switchgear incomer circuit breakers, the built in electronic, microprocessor based protection releases will be used for protection of the breakers.

5.1.5 Utility-interface parameters and system parameters

Linde Project No:	3710 A46M	Linde Issue	Client Project No:	-	Client Rev.
Linde Doc No:	&AE-E-PA 211.1001 (EN)	1.0	Client Doc No:	-	-

5.1.5.1 Service and general design conditions

Table 5.1.5.1 – Service and general design conditions

#	Topic	Design condition
1.	Design max./min. air temperature outdoor	max. 105°F, 41°C / min. 0°F, -18°C
2.	Humidity max./min outdoor	85% / n.a.
3.		
4.	Design max./min. air temperature indoor (machine halls, etc.)	max. 105°F, 41°C / min. 0°F, -18°C
5.	Design max./min. air temperature indoor (electrical rooms, substations)	max. 86°F, 30 °C, min. 59°F, 15 °C
6.	Humidity max./min indoor (electrical rooms, substations)	60% / n.a.
7.	Ex-certificates based on design temperature	max. 105°F, 41°C / min. 0°F, -18°C
8.	Altitude	< 1000m
9.	Seismic intensity	ASCE 7-10/IBC 2012 Risk Category III Site Class D Ss = 0.095 g S1 = 0.059 g SDC: B Seismic Design Category

5.1.5.2 Conditions of power supply and distribution system

The following conditions shall apply:

Table 5.1.5.2-Part1:
MV-system voltage levels, stationary voltage and frequency deviations, system earthing etc.

#	System	MV 1	MV 2	
1.	Line feeder intake	none	none	
2.	Service voltage	13.8 kV 3AC	4.16 kV 3AC	
3.	Voltage fluctuation stationary	± 5%	± 5%	
4.	Voltage fluctuation temporary	- 15%	- 15%	
5.	Service frequency	60 Hz	60 Hz	
6.	Frequency fluctuation stationary	± 1%	± 1%	
7.	System neutral	low resistance grounded	low resistance grounded	
8.	Network configuration	---	---	
9.	System configuration	as per &AE-E-ZQ 213.1001 (EN) Principle Electrical Single Line Diagram		
10.	Short-circuit capacity max. min.	 xx kA rms – 1s xx kA rms	 50 kA rms – 1s min.: n.a.	
11.	Load power factor approx.	natural	natural	

Table 5.1.5.2-Part2:
LV-system voltage levels, stationary voltage and frequency deviations, system earthing etc.

#	System	LV 1	LV 2 (Emergency)	
12.	Line feeder intake	none	One (1)	
13.	Service voltage	480 V 3AC, PEN	480 V 3AC, PEN	
14.	Voltage fluctuation stationary	± 5%	± 5%	
15.	Voltage fluctuation temporary	- 15%	- 15%	
16.	Service frequency	60 Hz	60 Hz	
17.	Frequency fluctuation	± 1%	± 1%	
18.	System neutral	high resistance grounded (5A)	high resistance grounded (5A)	
19.	Network configuration	TN-C	TN-C	
20.	System configuration	as per &AE-E-ZQ 213.1001 (EN) Principle Electrical Single Line Diagram		
21.	Short-circuit capacity max. min.	 65 kA rms - 1s min.: n.a.	 50 kA rms - 1s min.: n.a.	
22.	Load power factor approx.	0,95	natural	

Linde Project No:	3710 A46M	Linde Issue	Client Project No:	-	Client Rev.
Linde Doc No:	&AE-E-PA 211.1001 (EN)	1.0	Client Doc No:	-	-

Table 5.1.5.2-Part3:
LV-system voltage levels, stationary voltage and frequency deviations, system earthing etc.

#	System	LV 4 (UPS)	LV5 (DC)	
23.	Line feeder intake	none	none	
24.	Service voltage	208/120 V 3AC+N+PE	125 V DC, L+, L-, PE	
25.	Voltage fluctuation stationary	± 5%	± 5%	
26.	Voltage fluctuation temporary	- 10% in battery operation	- 10% in battery operation	
27.	Service frequency	60 Hz	DC	
28.	Frequency fluctuation	± 1%	n.a.	
29.	System neutral	Isolated	isolated	
30.	Network configuration	IT	IT	
31.	System configuration	as per &AE-E-ZQ 213.1001 (EN) Principle Electrical Single Line Diagram		
32.	---			
33.	---			
34.	Load power factor approx..	natural	n.a.	

5.1.5.3 Consumer parameters

Design voltages for consumers:
Table 5.1.5.3 – Consumer parameters

#	Consumer	Rating	System voltage	Nameplate voltage
1.	Induction Motors	>7,000 HP – 20,000 HP	13.8 kV	13.2 kV
2.		250 HP – 7,000 HP	4.16 kV	4.0 kV
3.		0.5 HP – 200 HP	480 V	460 V
4.	Heaters		480 V	480 V
5.	Welding Receptacles		480 V	480 V
6.	Space Heater	< 2 kW	120 V	120 V
7.	Space Heater	2 kW and above	208 V	208 V
8.	Convenience Receptacles		120 V	120 V
9.	Lighting Fixtures		120 V	120 V
10.	Electrical Heat Tracing		208 V	
11.	Control Voltage MV-SWG/MCC		125 VDC	
12.	Control Voltage LV-SWG		120 VAC	
13.	Control Voltage Motors		120 VAC	
14.	Instrumentation System (e.g. DCS)		120 VAC (UPS)	

MV motors shall be capable of accelerating the driven equipment with a terminal voltage of 80% of rated motor voltage.

LV standard motors shall be capable of accelerating the driven equipment with a terminal voltage of 80% of rated motor voltage.

Starting capabilities of motors for heavy duty starting conditions shall be specified on case by case basis.

5.1.6 Steady state voltage (max. voltage drops)

Following maximum voltage drops under full-load conditions shall be considered for system design:

#	Circuit	Max. voltage drop
1.	Feeder (e.g. for motors, heaters)	5 %
2.	Feeder (e.g. for e lighting transformer, MCC, DB)	2 %
3.	Branch circuit (supplied from remote MCC, DB)	3 %
4.	Total for feeder + branch	5 %
5.	Branch circuit at (main) MCC, DB (e.g. motor, heater, etc.)	5 %
6.	Lighting system in the field	5 %

5.1.7 Motor starting voltage drop

Following maximum voltage drops under start conditions shall be considered for system design:

#	Consumer	Max. voltage drop
1.	MV- and LV-motor starting - voltage at busbar	See paragraph *5.1.5.2 - Conditions of power supply and distribution system*

Linde Project No:	3710 A46M	Linde Issue	Client Project No:	-	Client Rev.
Linde Doc No:	&AE-E-PA 211.1001 (EN)	1.0	Client Doc No:	-	-

5.1.8 Load status (load category)

1) Electric loads shall be classified in load categories and considered, depending on their required reliability, as determined below.

2) The loads shall be classified area-wise as follows and initially considered as indicated in &AE-E-LM 212.1001 (EN) Electrical Load List.

3) Definitions for load categories:

- Normal Load (NL)
- Essential Load (EL)
- Critical Load (CL)
- Emergency Load (EML)

5.1.9 Operation duty

1) The operation duty of any loads shall be considered as required for plant operation and indicated initially in the &AE-E-LM 212.1001 (EN) Electrical Load List.

2) Following definitions shall apply for operation duty:

- Continuous operation (CO) - The load is continuously under operation.
- Continuous stand-by operation (CS) - The load is stand-by for a CO-load and will be used when the CO-load trips or the CO-load will be specifically put out of operation due to maintenance reasons, or to balance the operation time of spare equipment (e.g. A/B, A/B/C, etc.).
- Intermittent operation (IO) - The load is in intermittent process- or manual operation.

5.1.10 Load calculation (Load assessment and electricity calculation)

1) In addition to the above paragraphs, the following definitions shall apply for the determination of system loading conditions and the corresponding power demand:

- **Normal Running Load (NRL)** - Will be understood as the load required for the continuous plant operation under normal conditions.
  For calculation of rotating equipment the actual shaft power at its duty point is taken into consideration rather than the installed power, whereas for non-rotating equipment the required power is fully considered. For both equipment types, in some cases, for particular plant types and their particular plant **load cases**, partial loads may be considered for NRL calculation by applying a **demand factor**. For general application, a typically demand factor of 100% is used. In general, normal running load is the sum of continuous operated loads CO multiplied by a **diversity factor**, plus a specific portion of all intermittent loads IO.

- **Peak Load (PL)** - Will be understood as the maximum load required for any phase of plant operation.
  For calculation of peak load a specific portion of all standby loads CS will be added to the figure of normal running load NRL.

Linde Project No:	3710 A46M	Linde Issue	Client Project No:	-	Client Rev.
Linde Doc No:	&AE-E-PA 211.1001 (EN)	1.0	Client Doc No:	-	-

5.1.11 Spare and space philosophy; spare parts

1) Spare and space philosophy shall be agreed during further engineering.

Table 5.1.11 – Spare philosophy

#	Description	Spare	Space	Equipped Space	Spare parts	Remarks
1.	MV-SWG/MCC	1	1			per busbar section
2.	LV-SWG/MCC	20 %	10 %	-	-	
3.	Lighting distribution	10 %	10 %	-	-	
4.	Cable trays	20 %	-	-	-	
5.	Wall penetrations	10 %	-	-	-	
6.	General parts (e.g. fuses etc.)				10 %	Min. 1 pc. per type and size
7.	Switch room layout		20 %			
8.	Rectifiers, UPS, batteries	20 %				
9.	AC, DC distribution	10 %	10 %	-	-	

Definitions:

- **Spare**: Installed and wired equipment or device, ready to use
- **Space**: A free space where additional equipment or devices can be installed and wired
- **Equipped space**: An area which is prepared for plugging in a device (e.g. the wiring etc. is done, but the device needs to be supplied)
- **Spare parts**: Those are equipment or devices that are bought and stored for replacement (partly or completely)

5.1.12 Power factor

Power factor corrections to be performed by means of capacitor banks and/or synchronous motors, whatever is available in design of process plant. Focus is put on economic solutions.

Details for reactive power factor correction to be found in Part 1, 2 & 3 of Table *5.1.5.2 - Conditions of power supply and distribution system.*

5.2 Electrical area classification and explosion protection methods

NFPA 654 and NFPA 497 shall be used to establish area classification requirements. Application of these standards along with sound engineering judgment and the necessary process information shall be used to develop the Electrical Area Classification drawings. Protection against fire hazards

5.3 Power distribution (configuration of power systems)

5.3.1 General system configuration

1) The document &AE-E-ZQ 213.1001 (EN) Electrical Single Line Diagram shows the general configuration of power supply and distribution system.
2) The in-plant distribution voltage levels have been selected based upon an economic and engineering analysis of the project power requirements and plot size of plant.
3) Captive power transformers (also called auto transformers) may be used to supply power to large motors when starting of such motors adversely affects the electrical distribution system. In this case motor rated voltages shall be chosen based upon system economic considerations.
4) The equipment shall be sized to include installation conditions such as ambient temperature, altitude, load, sizing factors (like design-contingency factor, design allowance factor, demand factors, voltage regulation, short circuit capacities and the ability to start large motors and load characteristics under specified operating conditions.

Linde Project No:	3710 A46M	Linde Issue	Client Project No:	-	Client Rev.
Linde Doc No:	&AE-E-PA 211.1001 (EN)	1.0	Client Doc No:	-	-

5) Further basic and conceptual design considerations shall comply with the stipulations given in this specification and all other applicable sections of ITB.

6) The capacity of each MV incoming feeder and incoming MV-transformer shall meet the power demand requirements for 100 % plant load plus contingencies:

7) The capacity of each LV-feeder and LV-transformer shall be designed following same principles as for MV system as described above.

8) The following interlocking will be provided for the feeder line(s) from COMPANY:

- If the superior power breaker opens, the incomer will also open.
- It will not be possible to close the incomer, if the superior power source is not available.
- It will not be possible to close the earthing switch of the incomer, if the superior disconnector is closed
- It will not be possible to close the superior power breaker in operating position, if the earthing switch of the incomer is closed.
- Any protection functions of the main intake transformers or the earthing resistor will trip the incomer as well as the superior power breaker.

5.3.2 Emergency power supply (optional)

As emergency power supply an 480 V incomer from COMPANY is considered like indicated on &AE-E-ZQ 213.1001 (EN) Principle Electrical Single Line Diagram (as option).

5.3.2.1 Uninterruptible power supply UPS for critical loads (CL)

For details, which equipment shall be supplied by UPS systems, for reference see &AE-E-LM 212.1001 (EN) Electrical Load List.

The UPS-systems shall be installed within the main substation in an air conditioned room.

Any equipment having their inherent (own) standard redundant battery back-up system included should not be supplied by the UPS-System.

UPS systems shall be provided for all critical and sensitive users of the plant facilities, typically such as:

- The distributed control system (DCS)
- Any programmable logic controllers (PLC's) either in the instrumentation or electrical systems
- The emergency shut-down system (ESD)
- The electrical monitoring and control System
- Any critical instrumentation required for DCS, ESD, SCADA, etc
- The telecom systems

5.3.3 Automatic transfer system (ATS)

Application functions

The ATS shall provide and perform the following operational functions, which shall be protected as required due to safety reasons, while momentary paralleling shall be protected by synchro-check, so that changer-over switching is only possible with both incomers synchronized, and limited for a pre-set time:

1) automatic and semi-automatic switching of the MV incomers and bus-ties as well as the required feeders

2) automatic and semi-automatic switching of the LV incomers and bus-ties of MCCs

3) uninterrupted load transfer to only one incomer

4) back-switching to a re-energized incomer

5) operational coordination and sequencing of the above-mentioned functions as required for the entire system operation

Linde Project No:	3710 A46M	Linde Issue	Client Project No:	-	Client Rev.
Linde Doc No:	&AE-E-PA 211.1001 (EN)	1.0	Client Doc No:	-	-

Hardware and software configuration

1) The system change-over, load transfer etc. shall be realised with conventional relay control circuits or programmable PLC. The control system shall be arranged within switchgear and shall consist of:

   - the relay control circuits or PLC
   - the required control switches, including the mode-of-operation selector switches, push-buttons and annunciators, which shall be flush-mounted type, arranged at the front side of the switchgear
   - a mimic diagram of the power supply and distribution system, arranged at the front side of the switchgear, showing the overall system arrangement as well as its operational status, all incomers and bus ties

5.3.4 Control

Electrical consumers will be controlled by DCS system. Details are given in &AE-J-PA 211.1001 (EN) General Design Specification Instrumentation and Control Systems.

5.3.5 Electrical substations and transformer stations

Substations and transformer stations shall be provided within the plant as close as possible to the electrical consumers. Substations will be considered as an elevated container.

5.3.5.1 Location of substations and transformer stations

1) Substations shall be located in non-hazardous areas.

2) Step-down transformers shall be located in the open air adjacent to the substation for which they are needed, except for smaller items, e.g. dry-type transformer and transformers for instrument power or socket outlets. The latter ones shall be located within the substation building.

5.3.5.2 Substation container

1) The substation container shall be located in safe areas and may combine switchgear and motor control gear in the same room.

2) Substation will be designed as prefabricated metal building, installed on concrete poles.

3) Separate battery rooms shall be provided concerning all necessary voltage levels, with sufficient ventilation due to degassing of batteries, if necessary.

4) Sufficient ventilation shall be provided for substations or individual switchrooms, providing that indoor ambient temperature is limited to a temperature as specified under paragraph *5.1.5.1 Service and general design conditions* (including heat dissipation by installed equipment under full load condition).

5) The container and rooms shall be protected against dust, fumes, water, overfloating and the ingress of birds, snakes, vermin, insects and rodents. Openings for cable entering into the container shall be carefully closed and sealed.

6) Only authorized personnel shall enter into substations and switchrooms to be secured by key-lockable doors.

7) Smoke detectors shall be provided in the equipment room(s) as well as in the cable basement(s) for fire alarm purposes in the central control room of the plant.

8) AC & DC-UPS-systems, control and supervisory cabinets, control boards shall generally be located in fully air-conditioned rooms.

Linde Project No:	3710 A46M	Linde Issue	Client Project No:	-	Client Rev.
Linde Doc No:	&AE-E-PA 211.1001 (EN)	1.0	Client Doc No:	-	-

5.3.5.3 Open air transformer stations

For oil-immersed type transformers, the following shall be provided:

1) The transformers shall be installed outdoors within fenced bays. Key-locked doors shall be provided so that only authorised personnel can enter into the fenced bays.
2) Walls shall be provided between the boxes due to fire protection, if necessary.
3) Concrete oil pits shall be provided below the transformers in order to prevent that transformer oil can enter into the natural ground in case of leakages. A facility shall be provided to enable removal of stormy water.
   Note: In case ester based transformer oils are used it might be possible to have no oil pit for the transformer. Ester oils are based on Pentaerythritol and are biodegradable.
4) Sun and weather protection roofs shall be provided for all transformer bays, if required.

5.4 Transformers

5.4.1 Power transformers

1) Power transformers will be designed for outdoor locations and be a three phase, liquid immersed conservator type.
2) Transformers will be sized acc. to *5.1.10 Load calculation (Load assessment and electricity calculation)*.

   The design of transformers and accessories will allow the starting of the largest motor with the remaining normal load operation without exceeding the secondary bus voltage drop and without exceeding transformers short time ratings.

5.4.2 Distribution transformers

1) Distribution transformers will be designed for outdoor/indoor locations and be a three phase, dry type.
2) Transformers will be sized acc. to 5.1.10 Load calculation (Load assessment and electricity calculation).

5.5 Motor controls

5.5.1 General design conditions

1) All motor starters shall be grouped together within MV switchgear, LV power and motor control centers to be located in substations or local switchrooms in a safe area.
2) Feeders for electrical heaters shall be performed similar to the motor starters.
3) All starters and feeders shall be provided for remote control except those for directly interlocked auxiliaries (e.g. motor anticondensate heaters).
4) Wiring of feeder circuits shall be standardised so that feeders of same size can be interchanged.
5) Whenever possible, motors shall be provided for direct online full voltage starting except for special calls (e.g. two-speed drives, reversing drives).
6) Large drives might be provided for other starting method than DOL, e.g. with variable frequency starting, reactor start, rheostatic starter for slip-ring motors, etc. Starting procedure shall be fully automatic needing only one action by the operator to initiate the starting process.
7) Where automatic starting for stand-by motors is provided, facilities shall be furnished to allow the designated "running" and "spare" motors to be interchanged at intervals to suit operating convenience. The "spare" and "running" selection circuit shall not be such as could inadvertently allow of a required spare not starting automatically when needed.

Linde Project No:	3710 A46M	Linde Issue	Client Project No:	-	Client Rev.
Linde Doc No:	&AE-E-PA 211.1001 (EN)	1.0	Client Doc No:	-	-

8) Where variable speed motors are needed, speed control shall be preferably accomplished by use of static type converters with state of the art power electronics (e.g. thyristor, IGBT), to be designed in order to limit their harmonics interference to acceptable values in accordance with the applicable codes and standards. Reference signal for speed setting shall by hard- or soft-wired links, typically 4 - 20 mA, and derived from DCS in general.

9) Where two machine sets are provided, one provided for the continuous run and the other one for standby, their motors shall be fed from independent power buses, if possible.

5.6 MV-switchgears

Additional to general design conditions, following shall apply:

1) MV switchgears shall be provided for indoor installation and shall be of the metal clad, freestanding, vertical type with draw-out type switching equipment (MV-breakers, MV-fused contactors).

2) Each MV panel shall have four (4) compartments in minimum for the concerned bus-bars, MV switching equipment, the external MV feeder connection and the LCV auxiliaries.

3) Earthing switches shall be provided for all incomers, busbars and all branch circuits where back feeding is possible (e.g. transformer feeders)

4) All external cables shall enter from below into the switchgear, whereas bus ducts, if applicable, shall be connected from above.

5) Only the front side of the panels shall be provided for the operation of the switchgear.

6) The switchgear shall be completely factory assembled, wired and tested in the works of the manufacturer.

7) Future extension on both ends of a switchgear line-up is preferred.

5.6.1 LV-switchgears and MCCs

Additional to general design conditions, following shall apply:

1) LV-switchgears shall be provided for transformer incomers and contain all general outgoing feeders and MCC feeders.

2) Motor control centres MCC shall be provided for all motor and heater feeders

3) Details are indicated on &AE-E-ZQ 213.1001 (EN) Electrical Single Line Diagram

4) LV-SWG/MCC shall be provided for indoor installation and shall be of the metal enclosed type.

5) Panels may be provided for freestanding or back-to-back installation.

6) All circuit breakers for incomers, bus ties, general outlets of 250 A and above, MCC feeders of any size, as well as motor and heater feeders shall be of draw-out types.

7) All contactor feeders of any size, for motor and heater as well as general feeders shall be of withdrawable type.

8) All external cables shall enter from below into the LV-SWG/MCC.

9) Only the front side of the panels shall be provided for the operation of the equipment.

10) The equipment shall be completely factory assembled, wired and tested in the works of the manufacturer.

11) Future extension on both ends of a LV-SWG/MCC line-up shall be possible.

Linde Project No:	3710 A46M	Linde Issue	Client Project No:	-	Client Rev.
Linde Doc No:	&AE-E-PA 211.1001 (EN)	1.0	Client Doc No:	-	-

5.6.2 Local control facilities

1) The local control stations shall be provided adjacent to the equipment, for which they are needed (e.g. motors, process heaters, motorised valves, etc), if indicated on PID
2) Inside and outside earthing terminals must be provided for metallic parts of control stations.
3) In case a local control desk or panel board exists (e.g. for compressors), the local motor control and monitoring equipment shall be preferably build-in into such facility.

5.7 Motors

Motors to be sized as by API 610, table 12 – Power ratings for motor drives:

#	Motor nameplate rating [kW]	Motor nameplate rating [hp]	Percentage of rated pump power (or driven machine power) [%]
1.	<22	(<30)	125
2.	22 to 55	(30 to 75)	115
3.	>55	(>75)	110

Sizing of motors shall be based upon the maximum driven equipment power requirement plus design contingency factor (API), or for special applications to be agreed upon with COMPANY.

All windings shall be class F insulated with a temperature rise limited to B under full load conditions.

Where speed/torque control is required, converter fed motors may be used.

5.7.1 MV-motors

1) MV-motors shall preferably be of the squirrel cage, direct on line start, induction type. All stator windings shall be star-connected.
2) For very large MV motors also synchronous motors may be applied.
3) Motors shall be provided with anti-condensation space heater, which shall be automatically switched on, when motor stops.
4) Six winding Pt100 shall be provided, to be used for high-temperature alarm and trip, while three of the Pt100 shall be used as spare.
5) If motors provided with sleeve bearings, two temperature sensors shall be provided per bearing, to be used for high-temperature alarm and trip, while one of the Pt100 per bearing shall be used as spare.
6) Totally Enclosed Water to Air Cooled (TEWAC, IC81W) and Totally Enclosed Compressed Air Cooled (TECAC) and Totally Enclosed Air to Air Cooled (TEAAC) motors shall be provided with temperature sensors in the hot and cold air.
7) All motors shall be tested at works.

5.7.2 LV-motors

1) LV-motors shall preferably be of the squirrel cage, direct on line start, induction type. All stator windings shall be star-connected.
2) Motors of 75 HP and above shall be provided with anti-condensation space heater, which shall be automatically switched on, when motor stops.
3) Motors for **HVAC**: Power limit allocation to voltage levels, rating selection with respect to the maximum driven equipment power requirement, shall be agreed upon.
4) Motors shall be of Totally Enclosed Fan Cooled (TEFC, IC411) type.
5) Bearings shall be used with an expected lifetime of min. 20.000 running hours.

Linde Project No:	3710 A46M	Linde Issue	Client Project No:	-	Client Rev.
Linde Doc No:	&AE-E-PA 211.1001 (EN)	1.0	Client Doc No:	-	-

5.8 Grounding

5.8.1 General conditions

1) Suitable grounding shall be provided:
   - for safety of personnel and equipment
   - to limit the voltage on circuit when exposed to a higher voltage than that for which the circuit was designed
   - to limit the maximum potential to earth due to normal voltage
2) Within process and industrial areas, the overall grounding system provided shall be a grid type system which is bonded to earth by means of grounding electrodes. The main grid shall be looped so that a charge at any point of this grid shall have at least two paths to earth.
3) The ground grid system shall be used as the common ground for all purposes including system neutrals (via separate connection), electrical equipment enclosures (power grounding), major structures (lightning protection) and machinery/ apparatus (static grounding). Additional grounding systems shall only be provided when specifically required (e.g. high-qualified computer earthing, etc) under consideration of such special conditions.
   recommendations shall be applied for design and construction.
4) All grounding systems shall be of fully adequate sized to cope with the conditions imposed upon them after making suitable provision against corrosion of the components, including all underground and above ground connections.
5) Driven ground rods (minimum depth 10 ft, made of copper clad steel 5/8) shall be used as electrodes.
6) The plant grounding system resistance to earth shall not exceed 5 ohms. When this value cannot be achieved by measuring, the ground rods shall be extended or new ones shall be implemented.
7) Plant ground loops shall be extended and bonded directly to unit substation grounding system at two points. Plant primary feeder cables shall be purchased with ground wires that shall also be tied to the ground bus at the unit substation and tied via equipment enclosures to the plant ground loops at their termination points.
8) The plant main ground loop shall be #2/0 AWG, green THW insulated, stranded copper wire. Bonding jumpers to equipment, in general, shall be #2 AWG stranded, copper wire with green 600V insulation. Connections to transformers, switchgear and motor control centers shall be #4/0 AWG. Each tap shall be individually connected to the main ground loop or substation ground bus.
9) Cadweld type earth connectors shall be used for the earth wire joints in general.

5.8.2 Equipment earthing

1) Branch ground buses shall connect the equipment to the main grid system. Long branch ground buses shall be looped and connected to the main grid at least at two points.
2) Major steel structures, process columns, vessels and stacks shall be protected against lightning strikes by direct grounded at their bases. Large steel structures, including building frames, shall be connected to the grounding system at two or more widely separated points.
3) The metal framework of all structures and buildings housing or supporting electrical power equipment shall be grounded.
4) All metallic cable conduits, cable armour and any lead sheaths shall be grounded.
5) Non-electrical equipment and machinery shall be adequately grounded to prevent the build-up of static electricity.

Linde Project No:	3710 A46M	Linde Issue	Client Project No: -	Client Rev.
Linde Doc No:	&AE-E-PA 211.1001 (EN)	1.0	Client Doc No: -	-

6) Swivel or insulated pipe joints have to be provided with bonding jumpers to ensure electrical continuity.

7) The transformer and switchyard fences and gates shall be grounded at the posts and connected to the main grounding grid.

8) Equipment and structures such as area lighting poles, metering sheds, fences, posts, etc, installed in remote offsite locations may be grounded by driving individual ground rods.

5.8.3 Electrical equipment grounding

1) Non-current carrying metal parts and enclosures of electrical equipment shall be bonded to the grounding system.

2) Switchgear and motor control centres shall be provided with an ground bus which is bonded to the enclosure. Individual feeder cables shall be grounded by connecting to this bus, which in turn shall be grounded by connecting to the main ground grid.

3) All motors shall be grounded by connecting to the main grounding grid.

4) Individually mounted LV-equipment, e.g. motors, local control stations, lighting fixtures, receptacles shall be grounded inside the enclosure. The frame shall be grounded by connecting to the main grid.

5.8.4 Electrical system earthing

1) Electrical system grounding shall be provided in accordance with the requirements of the power and distribution system design and the requirements of the local electrical supply authority.

2) Transformer and other system neutrals shall be connected to the electrical grounding system in an appropriate way to ensure continuous and fixed reference point for the system.

5.8.5 Lightning and surge protection

1) Generally, structural steel, vessels and tanks shall be considered adequately protected against lightning, being electrically continuous through the equipment grounding system and properly bonded.

2) Additional lightning protection shall be provided only when specifically required by the geographical location, from the point of view of frequency or severity of thunder storms, possible hazards due to the flammability of materials handled or when deemed mandatory by applicable codes and regulations. In such cases lightning protection shall be provided in compliance with these codes and regulations.

3) Switchyards and substations will be protected against lightning by means of lightning arrestors and surge capacitors. All incoming superior lines shall be provided with such protection on the line side.

5.8.6 Static control grounding

1) Static control will generally be achieved through proper bonding and grounding as provided by the equipment grounding system.

2) Where additional static control and elimination is required due to nature of the process and the explosive properties of the materials processed, provisions shall be made for this purpose accordingly.

3) When required, static ground detection system with visual and audible alarms shall be furnished in areas where static electricity may cause explosions.

Linde Project No:	3710 A46M	Linde Issue	Client Project No: -	Client Rev.
Linde Doc No:	&AE-E-PA 211.1001 (EN)	1.0	Client Doc No: -	-

5.9 Lighting

5.9.1 General conditions

1) Lighting will be provided in two systems:

- **Normal lighting**
  Such lighting circuits are being supplied by plant's normal power
- **Emergency lighting**
  a. **Emergency Escape Route / Exit Lighting**, if applicable
  The escape route lighting system shall provide the minimum illumination on escape routes to facilitate safe exit of personnel from buildings or process areas. It also includes exit signs.

  b. **Standby Lighting**, if applicable
  It is that part of emergency lighting that enables normal activities to continue substantially unchanged even after the interruption of normal power. The standby lighting system shall provide the minimum illumination to enable site personnel to perform important tasks or to restore the normal power to the facility. The standby lighting is supplied from a back-up power source. (e.g. diesel generator etc.).

  Standby lighting shall come on automatically after power failure. Typically, the ratio of luminaires connected to standby lighting power source to the total number of luminaires shall be:
  5% for administrative areas
  25% for process and utitlity areas
  30% for compressor areas / generating areas
  30% for switch rooms
  50% for control rooms

2) The plant and/or the facilities shall be well lighted so that routine operations and reasonable maintenance can be conducted with safety under normal conditions.

3) In case of an interruption in illumination an emergency lighting shall be provided for the most important points such as exits, escape ways, control rooms, substations, critical plant. Capacity of backup power shall be provided for 30 minutes operation of the intermediate emergency lighting.

4) Special lighting shall be provided for safety and indication purposes for aircraft warning, etc. as per the specific requirements at any point.

5.9.2 Lighting intensities

The lighting intensities for all locations shall be in accordance with the average recommended in API 540.

5.9.3 Aircraft warning lights

Aircraft warning lights will be provided, if necessary.

5.10 Receptacles (socket outlets)

1) Sufficient socket outlets and receptacles shall be provided within all areas for the purposes of illumination, hand tools and smaller electrical devices, welding machines and heavier construction and maintenance equipment.

2) Outlets and receptacles shall be used in a suitable design for the area condition where they are located. Explosion proof type equipment shall be provided for hazardous areas.

3) Socket outlets of special design shall be furnished together with a sufficient number of plugs.

Linde Project No:	3710 A46M	Linde Issue	Client Project No:	-	Client Rev.
Linde Doc No:	&AE-E-PA 211.1001 (EN)	1.0	Client Doc No:	-	-

5.11 Cable and wiring

5.11.1 Cable runs

1) Cable shall run above or below grade depending on local conditions as well as fire risks, risks by leakage or seepage of process fluids, rodent attack as well as mechanical and thermal injury.

2) MV and LV cables and communication cables shall be laid separately in the cable trench or tray system for minimum interference with each other.

3) Above ground cable runs supported on ladders, trays or racks or clamped on flat surfaces shall be suitably protected against mechanical damage. They shall not be run over hot locations or places subject to undue fire risk.

4) Cable ladders/trays shall be provided with appropriate cover sheets in order to protect the cables against direct sun ray effects.

5.11.2 Cable types

1) The cable types to be used for power, control, lighting, and communication shall be selected and sized in accordance to the relevant standards and codes as well as their mode of installation and voltage level.

2) Cables and conductors shall be sized based on the current carrying capacity, voltage drop consideration and short-circuit rating as follows:

   - current carrying capacity: cables shall be rated in accordance with the codes or specifications to which the cable is made
   - maximum continuous rated load current
   - effect of peak load
   - cable de-rating factors for ambient temperature and grouping, soil resistivity
   - sufficient load terminal voltage when starting the load (e.g. motor)
   - short-circuit current capacity which results in mechanical and thermal stress of cables
   - mechanical strength factor;
     the minimum conductor size shall be:

motor and feeder cables	2.5 mm²
lighting and small power cables	2.5 mm²
control cables	1.5 mm²
MV cable	35 mm²

3) Control cables shall be selected by consideration of capacitance effects to be safely prevented in control circuits.

4) Wire and cable material shall be conform to approved specifications and be impervious to moisture, vermin, insects and fungi and shall be suitable for sun ray effects when laid on open air trays.

5) All cables shall be adequately protected to prevent moisture pick up at all times during shipment, installation and operation.

6) Conductors shall be stranded copper except where otherwise stated.

Linde Project No:	3710 A46M	Linde Issue	Client Project No:	-	Client Rev.
Linde Doc No:	&AE-E-PA 211.1001 (EN)	1.0	Client Doc No:	-	-

5.12 Electrical heat tracing

1) Electric-heat tracing systems are used for maintaining process piping or vessel temperatures and for freeze protection.
2) For economic reasons freeze protection circuits will be automatic controlled by an ambient temperature controller, freeze heating will be switched off at temperatures above 5-10°C.
3) The use of self-limiting heat tracing cables is being preferred. When required heat tracing circuit will be provided with regulators and limiter.
4) All trace heating cables will be shown on isometric drawings, which will also show the pipe, tank or instrument to be traced.

5.13 Cathodic protection

Cathodic protection system will be designed if required.

5.14 Communication system

Communication system like CCTV system will be designed for the project if required.

6 DESIGN PROCEDURES

6.1 General requirements

1) All electrical equipment shall be completely tagged and referenced on one-line diagrams and data sheets. Refer to applicable engineering numbering system for the project.
2) Equipment itself shall be physically tagged with the tag reference number in an indelible and clear fashion.
3) All equipment shall be adequately labelled and such labels shall be so fitted as to prevent interchange of labels. All removable units shall be clearly labelled with number (e.g. motor number) and title.
4) All labels, drawings, diagrams and instructions shall be performed in the English language.

6.2 Design documentation

1) The design documentation shall cover all requirements for system and equipment design, selection of equipment and material as well as complete installation, and shall be furnished in the English language.
2) The SUB-CONTRACTOR shall be responsible for rightness and reliability of the complete design, included in his scope of work. Design shall be in accordance with all relevant job specifications and be approved by CONTRACTOR / COMPANY.
3) The design documentation shall be according agreed deliverables list.
4) SUB-CONTRACTOR to furnish all documents in a good quality and the required number of sets.

7 DOCUMENTATION

1) SUB-CONTRACTOR to furnish complete equipment manuals for his own scope of supply, in the English language.

Linde Project No:	**3710 A46M**	Linde Issue	Client Project No:	-	Client Rev.
Linde Doc No:	**&AE-E-PA 211.1001 (EN)**	**1.0**	Client Doc No:	-	-

8 INSPECTION

1) All tests to be performed shall be in accordance with the relevant standards and codes to be followed in the job and the conditions specified below.

2) All major electrical equipment, motors, switchgear, transformers, generators, auxiliary power and communication equipment shall be tested at the manufacturer's workshop before shipment.

3) If agreed full-load tests shall be conducted on the equipment. Such full-load testing is not required for items such as switchgear and motor control gear which have been fully type-tested. However, generators, etc, and motors which have not been type tested shall be fully tested at the manufacturer's works before shipment.

4) Tests of equipment not previously type-tested shall include full-load performance tests and test certificates shall be completed and certified by the manufacturer concerned, if agreed.

5) Control equipment and electrical system protection devices shall all be fully tested (primary/secondary injection tests) in the manufacturer's works after installation in the corresponding panels providing also full functional tests of equipment. The equipment shall be dispatched with all relays, time delays, trip devices, etc., correctly set at the required settings.

6) The same procedure shall be performed for communication equipment, which shall also be tested regarding its characteristics.

Appendix L

OSBL Piping and Instrumentation Diagrams

Kiewit

PIPING AND INSTRUMENTATION DIAGRAMS

RETROFITTABLE ADVANCED COMBINED CYCLE INTEGRATION FOR FLEXIBLE DECARBONIZED GENERATION
DE-FE-0032131

KIEWIT PROJECT NO. 20041223

ISSUED: APRIL 14, 2023

REVISION 0 – ISSUED FOR FEED

GENERAL TAGGING

UNITS IDENTIFIER

1A - POWER BLOCK ONE - UNIT A
1B - POWER BLOCK ONE - UNIT B
1S - POWER BLOCK ONE - STEAM TURBINE
1Z - POWER BLOCK ONE "COMMON"
0Z - SITE COMMON

PIPING AND VALVES

PIPE LINE EXAMPLE

1A - 12" - HPS1000 - 1HBD1A - 4.0" AH
- INSULATION THICKNESS AND SPEC TYPE ("H" SUFFIX DENOTES HEAT TRACING)
- PIPE SPEC
- UNIQUE LINE NUMBER
- SYSTEM
- PIPE SIZE
- UNIT IDENTIFIER

INSULATION TYPES

A - CONTINUOUS PERSONNEL PROTECTION AND FREEZE PROTECTION
AH - CONTINUOUS PERSONNEL PROTECTION AND FREEZE PROTECTION, WITH HEAT TRACE
B - INTERMITTENT PERSONNEL PROTECTION

MANUAL VALVE EXAMPLE

1A-VHPS100F
- SELLER FURNISHED VALVE
- UNIQUE NUMBER
- SYSTEM
- MANUAL VALVE (INCLUDING CHECK TYPE)
- UNIT IDENTIFIER

LINE WEIGHT AND TYPE DESIGNATION

- PIPING FURNISHED BY OTHERS
- PROCESS PIPING
- EXISTING PIPING AND COMPONENTS
- HEAT TRACED PIPING
- EQUIPMENT SKID LIMITS
- AREA BREAK

OFF-PAGE CONNECTOR

LINE NUMBER: 608 PD-011 — TO/FROM DESCRIPTION — UNIQUE IDENTIFIER TO SHEET NUMBER

- 602 DRAWING # — BI-DIRECTIONAL OFF DRAWING PAGE CONNECTOR
- 1191 DRAWING # — BATTERY LIMIT PAGE CONNECTOR
- 601 DRAWING # — BI-DIRECTIONAL BATTERY LIMIT PAGE CONNECTOR

PIPE SPEC LEGEND

MATERIAL LINE CLASS SPECIFICATION EXAMPLE

1 B A A 1 1
- UNIQUE SPEC REQUIREMENT
- ALLOWANCE
- MATERIAL SPECIFIC
- PIPE MATERIAL
- PRESSURE CLASS
- DESIGN CODE

DESIGN CODE	
1	ASME B31.1 (NONBOILER EXTERNAL PIPING)
2	ASME B31.1 (BOILER EXTERNAL PIPING)
3	ASME B31.3
4	ASME B31.4
5	ASME B31.5
8	ASME B31.8
9	ASME B31.9
A	ASME BOILER & PRESSURE VESSEL CODE SEC I
B	ASME BOILER & PRESSURE VESSEL CODE SEC III DIV 1 SUBSEC NB
C	ASME BOILER & PRESSURE VESSEL CODE SEC III DIV 1 SUBSEC NC
D	ASME BOILER & PRESSURE VESSEL CODE SEC III DIV 1 SUBSEC ND
F	FIRE PROTECTION PIPING (NFPA/FM)
H	ASME B31.12
N	ASME NONMETALLIC STANDARDS - NM.1, NM.2
P	INTERNATIONAL PLUMBING CODE
T	DEPT. OF TRANSPORTATION (49CFR192, 49CFR193, OR 49CFR195)
W	AMERICAN WATER WORKS ASSOCIATION

PRESSURE CLASS SPECIFICATION	
A	CL. 125 - ASME B16.1
B	CL. 150 - ASME B16.5 (ALSO B16.42 AND B16.47)
C	CL. 250 - ASME B16.1
D	CL. 300 - ASME B16.5
E	CL. 600 - ASME B16.5
F	CL. 900 - ASME B16.5
G	CL. 1500 - ASME B16.5
H	CL. 2500 - ASME B16.5
J	CL. 4500 - ASME B16.5
K	TUBING (RIGID, COLD DRAWN, TYPE K/L COPPER)
L	TUBING (ANNEALED, SS TUBING)
M	AWWA C200 SERIES, C300 SERIES CL. D
N	AWWA C200 SERIES, C300 SERIES CL. E
P	AWWA DUCTILE IRON PIPE, CL. 350
Q	AWWA DUCTILE IRON PIPE, RESERVED
U	FM APPROVED HDPE
W	DRAIN, WASTE AND VENT PIPING
1	API 6A 2000 PSI
2	API 6A 3000 PSI
3	API 6A 5000 PSI
4	API 6BX 2000 PSI
5	API 6BX 3000 PSI
6	API 6BX 5000 PSI
7	API 6BX 10000 PSI
8	API 6BX 15000 PSI
9	API 6BX 20000 PSI

MATERIAL SPECIFIC

PIPE MATERIAL - A - CARBON STEEL	
A	ASTM A106 GR. B
B	ASTM A53 GR. B
C	ASTM A 106 GR. C
D	ASTM A53 GR. A
E	ASTM A671 CLASS 60
H	VICTAULIC
J	AWWA C200 RESERVED
K	AWWA C200 RESERVED
L	ASTM A333 GR. 6
M	API 5L GR. B
N	API 5L X42 (PIPELINE USE ONLY, CFR, B31.8)
P	API 5L X46 (PIPELINE USE ONLY, CFR, B31.8)
Q	API 5L X52 (PIPELINE USE ONLY, CFR, B31.8)
R	API 5L X56 (PIPELINE USE ONLY, CFR, B31.8)
S	API 5L X60 (PIPELINE USE ONLY, CFR, B31.8)
T	API 5L X65 (PIPELINE USE ONLY, CFR, B31.8)
U	API 5L X70 (PIPELINE USE ONLY, CFR, B31.8)
V	API 5L X80 (PIPELINE USE ONLY, CFR, B31.8)
W	ASTM A653 G90
X	ASTM A1011/A1011M, GRADE 36

PIPE MATERIAL - B - ALLOY STEEL	
A	ASTM A335 GR. P11
B	ASTM A335 GR. P22
C	ASTM A 335 GR. P5
D	ASTM A335 GR. P91 TYPE 1
E	ASTM A335 GR. P91 TYPE 2
F	ASTM A235 GR. P92
G	RESERVED (P92 TYPE 2)
J	ASTM A335 GR. P9
K	P1 RESERVED

MATERIAL SPECIFIC

PIPE MATERIAL - C - STAINLESS STEEL	
A	ASTM A312 TP304/304L
B	ASTM A312 TP304H
C	ASTM A312 TP316/316L
D	ASTM A312 TP316H
E	ASTM A312 TP317/317L
F	ASTM A312 TP321
G	ASTM A312 TP321H
H	ASTM A321 TP347
J	ASTM A321 TP347H
M	VICTAULIC - 304/304L
N	VICTAULIC - 316/316L
S	DUPLEX (UNS S32205/S31803)
T	SUPER DUPLEX (UNS S32750)
W	ASTM A480 TP 304
X	ASTM A480 TP316

PIPE MATERIAL - D - CAST IRON	
A	ASTM A74
B	ASTM A888

PIPE MATERIAL - E - DUCTILE IRON	
A	AWWA C151
B	RESERVED

PIPE MATERIAL - F - COPPER	
A	TYPE L, SOLDER
B	TYPE K, SOLDER
C	COPPER TUBE, PRESSFIT (VIEGA) - HNBR GASKET
D	COPPER TUBE, PRESSFIT (VIEGA) - EPDM GASKET

PIPE MATERIAL - G - PLASTIC	
A	HDPE, ASTM D3350, PE4710 (PRESSURIZED - SDR 7)
B	HDPE, ASTM D3350, PE4710 (PRESSURIZED - SDR 9)
C	HDPE, ASTM D3350, PE4710 (PRESSURIZED - SDR 11)
D	PVC, ASTM D1785, SCH. 80 - SOLVENT WELD
E	CPVC, ASTM D1784, SCH. 80 - SOLVENT WELD
F	PVC - SCH. 40 DWV AG - SOLVENT WELD
G	CPVC, ASTM D1784, SCH. 80 - SOLVENT WELD
H	AIR PRO (ASAHI), ASTM D3035 PE100
I	AQUATHERM
J	HDPE, ASTM D3350 PE 4710, (NONPRESSURIZED)
K	RESERVED (SPECIFIC OEM)
L	PE VARIATION (INC. LDPE OR SPECIFIED MIXED/NATURAL)
M	MDPE, PE2708 (FUEL GAS SERVICE ONLY)
N	PVDF, ASTM D3222 TYPE 1
P	HDPE, PE4710, PRE-INSULATED PIPE
Q	**PVC - SDR 26 DWV UG - PUSH JOINT**
R	HDPE, ASTM D3350 PE 4710, (PRESSURIZED - SDR 13.5)
S	HDPE, ASTM D3350 PE 4710, (PRESSURIZED - SDR 17)
T	PVC, ASTM D1784, AWWA C900-16, (PRESSURIZED - DR14)
U	PVC, ASTM D1784, AWWA C900-16, (PRESSURIZED - DR18)

PIPE MATERIAL - H - CONCRETE	
A	AWWA C300 (STEEL CYLINDER, REINFORCED CONCRETE PRESSURE PIPE)
B	AWWA C301 (STEEL CYLINDER, EMBEDDED CYLINDER, PRESTRESSED CONCRETE)
C	AWWA C302 (REINFORCED, CONCRETE PRESSURE PIPE)

PIPE MATERIAL - J - FIBERGLASS	
A	ASTM D2996, RTRP-11FX1-3110

BASE MATERIAL - L - ALUMINUM	
A	ASTM B221/221M
B	ASTM B241/241M

PIPE MATERIAL - K - OTHER ALLOY	
A	ALLOY 20 (N08020)
B	HASTELLOY-C (N10276)
G	ALLOY 400 (N04400)
H	ALLOY 600 (N06600)
J	ALLOY 625 (N06625)
K	ALLOY 800 (N08800)
L	ALLOY 800H (N08810)
M	ALLOY 825 (N08825)

PIPE MATERIAL - M - CARBON STEEL/ STAINLESS STEEL	
A	ASTM A53 GR. B / A312 TP304L
B	ASTM A53 GR. B / A312 TP316L

PIPE MATERIAL - T - TUBING	
A	SS304/304L - UP TO 1000F (TUBING W/ COMPRESSION FITTINGS)
B	SS304/304L - UP TO 1000 F (TUBING W/ TUBE SOCKET WELD FITTINGS)
C	SS316/316L - UP TO 1000 F (TUBING W/ COMPRESSION FITTINGS)
D	SS304/304L - UP TO 1000 F (TUBING W/ TUBE SOCKET WELD FITTINGS)
E	SS316/316L - UP TO 1200F (TUBING)
R	TUBING, ALLOY 20
S	TUBING, HASTELLOY-C

ALLOWANCE					
0	0.000 INCH	3	0.063 INCH	6	0.188 INCH
1	0.020 INCH	4	0.094 INCH	7	0.250 INCH
2	0.030 INICH	5	0.125 INCH	9	OTHER

UNIQUE SPEC REQUIREMENT	
0	POTABLE WATER SERVICE (INCLUDES PW SERVICE NOTES)
1-9	STD. PIPE SPEC VARIATION (OVER ALPHA VARIATIONS)
D	DOUBLE CONTAINED PIPE
T	TEMPORARY

FITTINGS

- THREADED PLUG
- HOSE CONNECTION
- THREADED CAP
- WELDED CAP
- FLANGE
- UNION
- DIELECTRIC UNION
- DIELECTRIC FLANGE
- REDUCER

VALVES

- VALVE LOCKED OPEN
- VALVE LOCKED CLOSED
- GATE VALVE
- GLOBE VALVE
- BUTTERFLY VALVE
- BALL VALVE
- DIAPHRAGM VALVE
- KNIFE GATE VALVE
- NEEDLE VALVE
- PLUG VALVE
- EXCESS FLOW VALVE
- CHECK VALVE
- STOP CHECK VALVE
- ANGLE GATE VALVE
- 3-WAY VALVE
- 4-WAY VALVE
- UNDERGROUND VALVE WITH VALVEBOX
- FREEZE PROOF HOSE VALVE
- DOUBLE BALL, DOUBLE BLOCK WITH INTEGRAL
- SINGLE BALL, DOUBLE BLOCK WITH INTEGRAL

SPECIALTY ITEMS

EXAMPLE

1A - ARV - SYS100
- UNIQUE NUMBER
- SYSTEM
- SPECIALTY IDENTIFICATION LETTERS
- UNIT IDENTIFIER

- ARC - AUTOMATIC RECIRCULATION VALVE
- ARV - AIR RELEASE VALVE
- AVV - AIR/VACUUM VALVE
- BFP - BACKFLOW PREVENTER
- BST - DUPLEX BASKET STRAINER
- BST - SIMPLEX BASKET STRAINER
- CFD - CHEMICAL FLOOR DRAIN
- CLO - CLEAN OUT
- CNP - CONNECTION POINT (1A-CNP-SYS100, UG / AG)
- DES - DESICCANT
- DPR - DAMPER
- DRF - DRAIN FUNNEL
- DSH - DESUPERHEATER
- EQD - EQUIPMENT DRAIN
- EXJ - EXPANSION JOINT
- FLA - FLAME ARRESTOR
- FLD - FLOOR DRAIN
- FLH - FLEXIBLE HOSE
- FLT - FILTER
- HSR - HOSE REEL
- IDV - INDICATING VALVE
- IKS - ISOKINETIC SAMPLE NOZZLE
- INJ - INJECTING ELEMENT
- MXT - MIXING TEE
- PAV - COMBINATION PRESSURE AIR RELEASE & AIR/VACUUM VALVE
- POT - SEAL POT
- RSS - REMOVABLE SPOOL
- SCS - SCREEN STRAINER
- SIL - SILENCER
- SMX - STATIC MIXER
- STR - SELF-CLEANING STRAINER
- STS - STARTUP STRAINER
- TPC - TERMINAL POINT CONNECTION
- TRP - TRAP
- TTS - T-TYPE STRAINER
- VBK - VACUUM BREAKER
- YHD - FREEZE PROOF YARD HYDRANT
- YTS - Y-TYPE STRAINER

SPEC BREAKS AND BUILDING PENETRATIONS

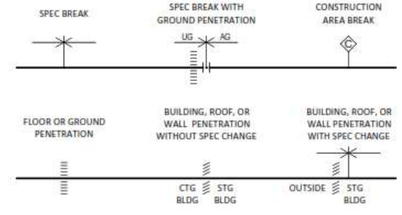

NOTE: SPEC BREAK DELINEATES A NEW PIPE LINE NUMBER DUE TO A CHANGE IN PIPE SPEC OR INSULATION TYPE. CONSTRUCTION AREA BREAK DELINEATES A NEW PIPE LINE NUMBER WITHOUT A CHANGE IN PIPE SPEC OR INSULATION TYPE.

BUILDING/ENCLOSURE PENETRATION NAMING CONVENTION

ADMIN BLDG	ADMINISTRATION BUILDING	HRSG PENT	HRSG PENTHOUSE
AXB BLDG	AUXILIARY BOILER BUILDING	OUTSIDE	OUTDOOR/EXTERIOR
BFP ENCL	BOILER FEEDWATER PUMP ENCLOSURE	RWP ENCL	RAW WATER PUMP ENCLOSURE
CTCF ENCL	COOLING TOWER CHEM FEED ENCLOSURE	SMP LAB	SAMPLE PANEL LAB
CTG BLDG	COMBUSTION TURBINE BUILDING	STG BLDG	STEAM TURBINE BUILDING
CWP ENCL	CIRCULATING WATER PUMP ENCLOSURE	WH/MNT SHOP	WAREHOUSE/MAINTENANCE SHOP
FGS ENCL	FUEL GAS COMPRESSOR ENCLOSURE	WTR BLDG	WATER TREATMENT BUILDING

FIRE AND SAFETY

- ALARM VALVE
- DELUGE VALVE
- DRY PIPE VALVE
- FHS - FIRE HOSE STATION
- HYD - FIRE HYDRANT
- FHH - FIRE HOSE HEADER
- FPC - FIRE DEPARTMENT CONNECTION
- EWS - EYE WASH W/ SHOWER
- EWE - EYE WASH
- HWH - FIRE HYDRANT WITH HOSE HOUSE

- PRELIMINARY -
NOT FOR CONSTRUCTION

REV	DESIGN BY	CHECKED BY	DATE
0	ISSUED FOR FEED A. UTTAMCHANDAN	D. SIVILS	04-14-23

ALABAMA POWER COMPANY
GE / SOUTHERN / LINDE ADVANCED NGCC INTEGRATION

Kiewit

LEGEND - P&ID
PIPING AND COMPONENTS

ENGINEER/DESIGN ORIGINATOR	A. UTTAMCHANDAN
LEAD ENG	D. SIVILS
ENG MGR	B. LOFGREEN
PROJ MGR	B. LOFGREEN

DRAWING NUMBER: 20041223-LG-001

CONTROL AND SAFETY VALVE TAGGING

EXAMPLE
1A-PCV-HPS101

- UNIQUE NUMBER
- SYSTEM
- VALVE IDENTIFICATION LETTERS
- UNIT IDENTIFIER

FO

FAIL ACTIONS
FO = FAIL OPEN
FC = FAIL CLOSED
FL = FAIL LAST POSITION

CONTROL/AUTOMATED AND SAFETY/REGULATING VALVE IDENTIFICATION LETTERS

FCV	FLOW CONTROL VALVE
FV	FLOW OPEN / CLOSED VALVE
LCV	LEVEL CONTROL VALVE
LV	LEVEL OPEN / CLOSED VALVE
MOV	MOTOR OPERATED VALVE
PCV	PRESSURE CONTROL VALVE
PV	PRESSURE OPEN / CLOSED VALVE
PRV	PRESSURE REGULATOR (SELF-CONTAINED/PILOT-OPERATED)
PSV	PRESSURE SAFTY/RELIEF VALVE
SOV	SOLENOID VALVE
TCV	TEMPERATURE CONTROL VALVE
TV	TEMPERATURE OPEN/CLOSED VALVE
YCV	PNEUMATIC CONTROL VALVE
YV	PNEUMATIC OPEN/CLOSED VALVE

INSTRUMENTATION TAGGING

INSTRUMENTATION EXAMPLE

1A-PIT-HPS100 F C

- REMARK
- INVENTORY CODE
- 1A-PIT-HPS100A
  - SUFFIX (USED FOR REDUNDANCY)
  - UNIQUE NUMBER
  - SYSTEM
  - INSTRUMENT IDENTIFICATION LETTERS
  - UNIT IDENTIFIER

INSTRUMENT IDENTIFICATION LETTERS
SEE ANSI/ISA - 55.1 - LATEST EDITION FOR DETAILED EXPLANATIONS
*INDICATES A DEVIATION FROM ISA 55.1

	FIRST - LETTER		SUCCEEDING - LETTER		
	MEASURED OR INITIATING VARIABLE	VARIABLE MODIFIER	READOUT OR PASSIVE FUNCTION	OUTPUT OR ACTIVE FUNCTION	FUNCTION MODIFIER
A	ANALYSIS		ALARM		
B	BURNER COMBUSTION				
C				CONTROL	CLOSE
D		DIFFERENCE, DIFFERENTIAL			DEVIATION
E	VOLTAGE		SENSOR (PRIM. ELEMENT)		
F	FLOW, FLOW RATE	RATIO			
G			GLASS, GAUGE, VIEWING DEVICE		
H	HAND				HIGH
I	CURRENT (ELECTRICAL)		INDICATE		
J	POWER		SCAN		
K	TIME, SCHEDULE	TIME RATE OF CHANGE		CONTROL STATION	
L	LEVEL		LIGHT		LOW
M		MOMENTARY*			MIDDLE, INTERMEDIATE
N					
O			ORIFICE, RESTRICTION		OPEN
P	PRESSURE, VACUUM*		POINT (TEST CONNECTION)		
Q	QUANTITY	INTEGRATE, TOTALIZE	INTEGRATE, TOTALIZE		
R	RADIATION		RECORD		RUN
S	SPEED, FREQUENCY	SAFETY		SWITCH	STOP
T	TEMPERATURE			TRANSMIT	
U	MULTIVARIABLE		MULTIFUNCTION	MULTIFUNCTION	MULTIFUNCTION*
V	VIBRATION, MECH ANALYSIS			VALVE, DAMPER, LOUVER	
W	WEIGHT, FORCE		WELL, PROBE		
X	UNCLASSIFIED	X AXIS	ACCESS. DEVICES, UNCLASSIFIED	UNCLASSIFIED	UNCLASSIFIED
Y	EVENT, STATE OR PRESENCE	Y AXIS		AUXILIARY DEVICES	
Z	POSITION, DIMENSION	Z AXIS, SAFETY INSTRUMENTED SYSTEM		DRIVER,ACTUATOR UNCLASSIFIED FINAL CTRL ELEM	

REMARK

ALARM = ALARM
COMP = COMPRESSOR
E = E-TYPE T/C
FFB = FOUNDATION FIELD BUS
HART = HART ENABLED DEVICE
J = J-TYPE T/C
K = K-TYPE T/C
PFB = PROFIBUS (FIELD PROCESS BUS)
PTC = POWER TEST CODE
RTD = RESISTANCE TEMPERATURE DETECTOR
RWT = RAW WATER TREATMENT
SIL = SILICA
SOD = SODIUM
ST = STEAM TURBINE
THRUST = THRUST
WDG-U = MOTOR WINDING - PHASE U
WDG-V = MOTOR WINDING - PHASE V
WDG-W = MOTOR WINDING - PHASE W
WT = WATER TREATMENT
DE = DRIVE END
NDE = NON-DRIVE END
I/P = VALVE POSITIONER
PMP= PUMP
MTR = MOTOR
AXIAL = AXIAL VIBRATION
CC = CATION CONDUCTIVITY
SC = SPEC CONDUCTIVITY
DO = DISSILVED OXYGEN
pH = pH
RAD = RADIAL VIBRATION
KEYPHASOR = KEYPHASOR
FGD = FIRE/GAS DETECTOR
CT = COMBUSTION TURBINE
GWR = GUIDED WAVE RADAR
ULT = ULTRASONIC
MAG = MAGNETIC

INVENTORY CODE

F = FURNISHED BY VENDOR
NOTE: VENDOR FURNISHED SYMBOL "F" IS NOT UTILIZED FOR I/O SHOWN AS INTEGRAL TO THE PRIMARY EQUIPMENT SUCH AS MOTORS, FANS AND CONTROL PANELS.

SAFETY/ REGULATING VALVES

- ANGLE FILLED SYSTEM TEMP REG
- ANGLE PRESS RELIEF VALVE
- PILOT OPERATED ANGLE PRESSURE RELIEF VALVE
- ANGLE PRESSURE RELIEF VALVE WITH SENSING RING
- BACKPRESS REG W/EXT TAP
- FILLED SYSTEM TEMP REG
- PRESS RED REG W/EXT TAP
- PRESS RED REG W/INT RV
- PRESS/VAC RELIEF VALVE
- SELF CONTAINED BACKPRESS REG
- SELF CONTAINED PRESS RED REG
- TURBINE BYPASS VALVE

ACTUATORS

- CONTROL VALVE W/ HAND OPERATOR
- CYLINDER, DOUBLE ACTING
- CYLINDER, SINGLE ACTING OR WITH POSITIONER
- EH — ELECTRO-HYDRAULIC OPERATED VALVE
- M — MOTOR OPERATED VALVE
- PNEUMATIC OPERATED VALVE
- SOLENOID OPERATED VALVE

FLOW INSTRUMENTS

- C — CORIOLIS METER
- FLOW NOZZLE
- INLINE FLOW INDICATOR
- INLINE PROPELLER FLOW METER
- M — MAGNETIC FLOW METER
- ORIFICE PLATE
- TH — THERMAL DISPERSION METER
- ULTRASONIC FLOW METER
- FE — VARIABLE AREA FLOW METER
- VENTURI TUBE
- VORTEX FLOW METER

SIGNAL LINES

- ELECTRICAL SIGNAL
- CAPILLARY TUBE
- PNEUMATIC BINARY LINE
- PNEUMATIC LINE
- HYDRAULIC LINE
- ELECTRICAL BINARY LINE
- SONIC LINE
- SOFTWARE DATA LINK
- MECHANICAL LINK
- INSTRUMENT LINE

INSTRUMENTATION SYMBOLS

- SINGLE-FUNCTION - LOCAL PANEL
- SINGLE-FUNCTION - LOCAL PANEL NOT ACCESSIBLE
- LOCAL PANEL DEVICE - OPERATOR ACCESSIBLE
- INACCESSIBLE OR BEHIND-THE PANEL DEVICES OR FUNCTIONS
- SINGLE-FUNCTION - FIELD
- F — SINGLE-FUNCTION - FIELD (FURNISHED)
- I/P — I/P = ELECTRO PNEUMATIC (MODULATING) S/V = SOLENOID ACTUATED (OPEN/CLOSED)
- REMARK — DCS ACCESSIBLE
- REMARK XX — COMP FUNC XX = FUNCTION DESCRIPTION NUMBER
- REMARK XX — PLC ACCESSIBLE
  XX = BMS - BURNER MANAGEMENT SYSTEM
  FG - FUEL GAS COMPRESSOR
  AC - AIR COMPRESSOR
  AB - AUXILIARY BOILER
  WT - WATER TREATMENT
  CH - COMBUSTION TURBINE CHILLER
  ST - STEAM TURBINE
  CT - COMBUSTION TURBINE
  FGC - FUEL GAS CONDITIONING
  VMS - VIBRATION MONITORING SYSTEM
  FP - FIRE PROTECTION
- XX — INTERLOCKING/LOGIC/PROTECTIVE FUNC
  XX = MCC - MOTOR CONTROL CENTER
  LCP - LOCAL CONTROL PANEL

REMARK

ALARM = ALARM
AUTO = AUTO
AVAIL = AVAILABLE
AXIAL = AXIAL
BKR IN TEST = BREAKER IN TEST
BKR RACK IN = BREAKER RACK IN
BRG = BEARING
CAT COND = CATION CONDUCTIVITY
CLOSE = CLOSE
CLSD = CLOSED
CMD = COMMAND
FLT= COMMON FAULT
DE = DRIVE END
DMD = CONTROL VALVE DEMAND
DEW POINT = DEW POINT
DEX = DRIVE END - X AXIS
DEY = DRIVE END - Y AXIS
DEZ = DRIVE END - Z AXIS
DO = DISSOLVED OXYGEN
DRYING = DRYING
ENABLE = ENABLE
E-STOP = EMERGENCY STOP
FFB = FOUNDATION FIELD BUS
FWD = MOTOR FORWARD
FWD RNG = MOTOR RUNNING FORWARD
HI = HIGH SIGNAL
HI RNG = MOTOR RUNNING AT HIGH SPEED
HI START = START AT HIGH SPEED
HI HI = HIGH HIGH SIGNAL
HTR ON = HEATER ON
LAG = LAG
LEAD = LEAD
LEAD/LAG = LEAD/LAG
LO = LOW SIGNAL
LO LO = LOW LOW SIGNAL
LO RNG = MOTOR RUNNING AT LOW SPEED
LO START = START AT LOW SPEED
LD = LOAD
LOR TRIPPED = LOR TRIPPED
LUBE OIL = LUBE OIL
MAKE UP = MAKE UP
NDE = NON-DRIVE END
NDEX = NON-DRIVE END - X AXIS
NDEY = NON-DRIVE END - Y AXIS
NDEZ = NON-DRIVE END - Z AXIS
O/L = OVERLOAD
OIL LVL = OIL LEVEL
OIL TEMP = OIL TEMP
OK = OK - STATUS
OPEN = OPEN
OPND = OPENED
pH = pH
POS = POSITION
PWR = POWER
PROT OPTD = PROT RELAY OPTD
PURGE = PURGE
REV RNG = MOTOR RUNNING IN REVERSE
RDY = READY
REM = REMOTE
REV = MOTOR REVERSE
RTD = RESISTANCE TEMPERATURE DETECTOR
RUN = RUN COMMAND
RNG = RUNNING
SP = SET POINT
SHDN = SHUTDOWN
SILICA = SILICA
SODIUM = SODIUM
SP COND = SPEC CONDUCTIVITY
SPARE = SPARE
SPD CMD = SPEED COMMAND FOR VFD/VSD
SPD FDBK = SPEED FEEDBACK FOR VFD/VSD
ST = STEAM TURBINE
START = START
START/STOP = START/STOP
STOP = STOP
STROKE = STROKE
TEMP = TEMP
TEST = TEST
THRUST = THRUST
TOC = TOC
TRIPPED = TRIPPED
TRBL = TROUBLE
WDG-U = MOTOR WINDING - PHASE U
UNLD = UNLOAD
WDG-V = MOTOR WINDING - PHASE V
VAC PMP = VACUUM PUMP
VFD = VARIABLE FREQUENCY DRIVE
WDG-W = MOTOR WINDING - PHASE W

- PRELIMINARY -
NOT FOR CONSTRUCTION

REV	DESIGN BY	CHECKED BY	DATE
0	ISSUED FOR FEED		
	A. UTTAMCHANDAN	D. SIVILS	04-14-23

ALABAMA POWER COMPANY
GE / SOUTHERN / LINDE ADVANCED NGCC INTEGRATION

Kiewit

LEGEND - P&ID
INSTRUMENT AND CONTROL VALVE

ENGINEER/DESIGN ORIGINATOR	A. UTTAMCHANDAN
LEAD ENG	D. SIVILS
ENG MGR	B. LOFGREEN
PROJ MGR	B. LOFGREEN

DRAWING NUMBER
20041223-LG-002

EQUIPMENT TAGGING

1A-SYS-FUN-01A

- UNIQUE NUMBER (LETTER USED FOR REDUNDANCY)
- FUNCTION
- SYSTEM
- UNIT IDENTIFIER

COMPRESSORS AND BLOWERS

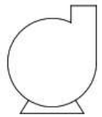

AIR BLOWER



COMPRESSOR

PUMPS



CENTRIFUGAL PUMP



ROTARY PUMP



POSITIVE DISPLACEMENT OR METERING PUMP

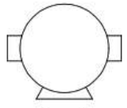

VACUUM PUMP

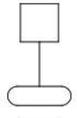

SUMP PUMP



CAN PUMP



WET PIT PUMP

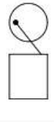

RECIPROCATING PUMP

HEAT EXCHANGERS



AIR COOLED HEAT EXCHANGER

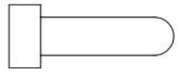

U-TUBE HEAT EXCHANGER



STRAIGHT TUBE HEAT EXCHANGER

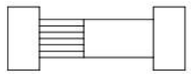

PLATE AND FRAME HEAT EXCHANGER

TURBINES AND DRIVERS

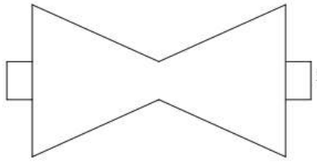

DOUBLE FLOW TURBINE

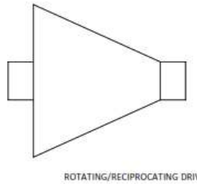

STEAM TURBINE

ROTATING/RECIPROCATING DRIVERS



A = AIR/PNEUMATIC
D = DIESEL
M = MOTOR
S = STEAM

LINEAR DRIVERS



S = SOLENOID

OTHER MECHANICAL EQUIPMENT

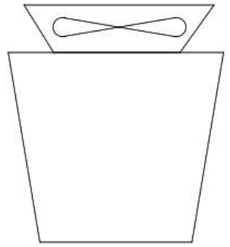

COOLING TOWER CELL



EJECTOR



GENERIC EQUIPMENT INTERFACE



HEATER

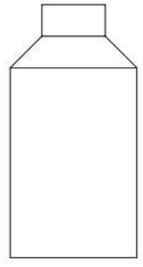

STEAM SURFACE CONDENSER

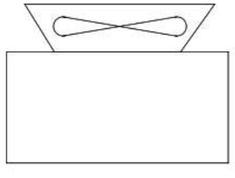

WET SURFACE AIR COOLER

TANKS



FLAT ROOF TANK

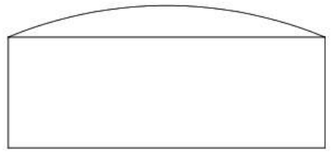

DOME ROOF TANK

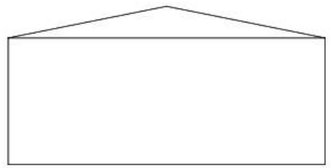

CONE ROOF TANK



HORIZONTAL DRUM TANK

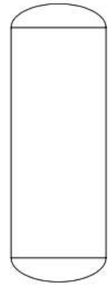

VERTICAL DRUM TANK

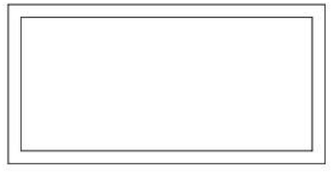

DOUBLE WALL TANK

- PRELIMINARY -
NOT FOR CONSTRUCTION

REV	DESIGN BY	CHECKED BY	DATE
0	ISSUED FOR FEED A. UTTAMCHANDAN	D. SIVILS	04-14-23

ALABAMA POWER COMPANY
GE / SOUTHERN / LINDE ADVANCED NGCC INTEGRATION

Kiewit

LEGEND - P&ID EQUIPMENT

		DRAWING NUMBER
ENGINEER/DESIGN ORIGINATOR	A. UTTAMCHANDAN	20041223-LG-003
LEAD ENG	D. SIVILS	
ENG MGR	B. LOFGREEN	
PROJ MGR	B. LOFGREEN	

GE / SOUTHERN / LINDE ADVANCED NGCC INTEGRATION FEED STUDY
PIPING AND INSTRUMENTATION DIAGRAMS

DRAWING NAME	DRAWING TITLE
PD-000	DRAWING INDEX
LG-001	DRAWING LEGEND
LG-002	DRAWING LEGEND
LG-003	DRAWING LEGEND
PD-620	LPS - LOW PRESSURE STEAM
PD-630	CND - STEAM CONDENSATE
PD-631	CND - PROCESS CONDENSATE
PD-660	CWS - CIRCULATING WATER
PD-661	CWS - CIRCULATING WATER
PD-662	CWS - CIRCULATING WATER
PD-663	CWS - CIRCULATING WATER
PD-670	CO - CARBON DIOXIDE
PD-680	FLG - FLUE GAS
PD-681	FLG - FLUE GAS
PD-710	DWS - DEMINERALIZED WATER
PD-730	SMP - SAMPLING

DRAWING NAME	DRAWING TITLE
PD-750	TCF - COOLING TOWER CHEMICAL FEED
PD-751	TCF - COOLING TOWER CHEMICAL FEED
PD-752	TCF - COOLING TOWER CHEMICAL FEED
PD-800	SWS - SERVICE WATER
PD-801	SWS - SERVICE WATER
PD-810	PWS - POTABLE WATER
PD-811	PWS - POTABLE WATER
PD-820	IA - INSTRUMENT AIR
PD-821	IA - INSTRUMENT AIR
PD-822	IA - INSTRUMENT AIR
PD-830	FPS - FIRE PROTECTION
PD-910	WW - WASTEWATER
PD-911	WW - WASTEWATER
PD-920	PDR - PLANT DRAINS
PD-921	PDR - PLANT DRAINS

- PRELIMINARY -
NOT FOR CONSTRUCTION

REV	DESIGN BY	CHECKED BY	DATE
0	ISSUED FOR FEED A. UTTAMCHANDAN	D. SIVILS	04-14-23

ALABAMA POWER COMPANY

GE / SOUTHERN / LINDE ADVANCED NGCC INTEGRATION

Kiewit

PIPING AND INSTRUMENTATION DIAGRAM
DRAWING INDEX

		DRAWING NUMBER
ENGINEER/DESIGN ORIGINATOR	A. UTTAMCHANDAN	20041223-PD-000
LEAD ENG	D. SIVILS	
ENG MGR	B. LOFGREEN	
PROJ MGR	B. LOFGREEN	

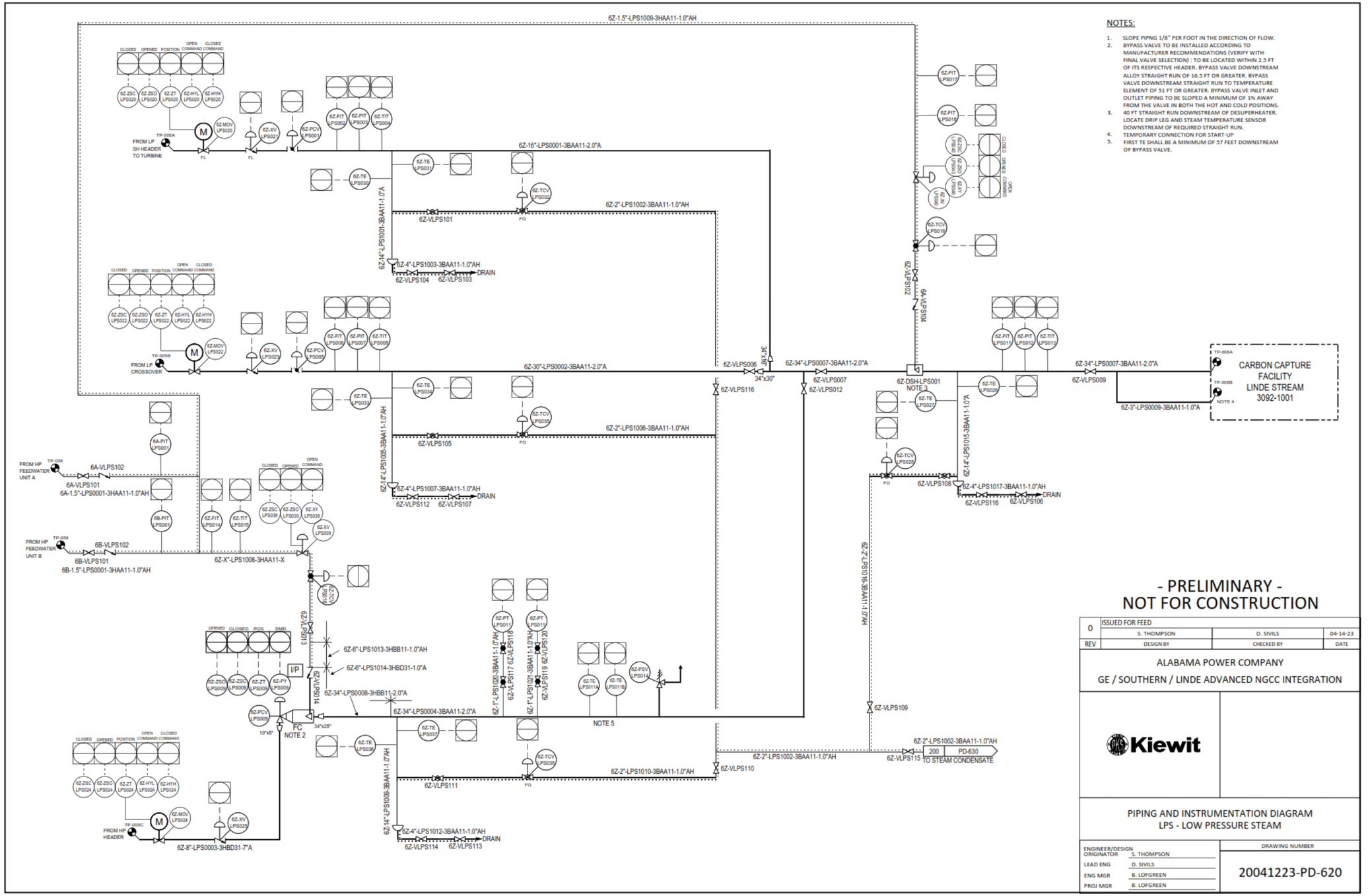
6Z-1.5"-LPS1009-3HAA11-1.0"AH
NOTES:
1. SLOPE PIPNG 1/8" PER FOOT IN THE DIRECTION OF FLOW.
2. BYPASS VALVE TO BE INSTALLED ACCORDING TO MANUFACTURER RECOMMENDATIONS (VERIFY WITH FINAL VALVE SELECTION) ; TO BE LOCATED WITHIN 2.5 FT OF ITS RESPECTIVE HEADER. BYPASS VALVE DOWNSTREAM ALLOY STRAIGHT RUN OF 16.5 FT OR GREATER. BYPASS VALVE DOWNSTREAM STRAIGHT RUN TO TEMPERATURE ELEMENT OF 51 FT OR GREATER. BYPASS VALVE INLET AND OUTLET PIPING TO BE SLOPED A MINIMUM OF 1% AWAY FROM THE VALVE IN BOTH THE HOT AND COLD POSITIONS.
3. 40 FT STRAIGHT RUN DOWNSTREAM OF DESUPERHEATER. LOCATE DRIP LEG AND STEAM TEMPERATURE SENSOR DOWNSTREAM OF REQUIRED STRAIGHT RUN.
4. TEMPORARY CONNECTION FOR START-UP
5. FIRST TE SHALL BE A MINIMUM OF 57 FEET DOWNSTREAM OF BYPASS VALVE.
6Z-16"-LPS0001-3BAA11-2.0"A
6Z-2"-LPS1002-3BAA11-1.0"AH
6Z-4"-LPS1003-3BAA11-1.0"AH
6Z-30"-LPS0002-3BAA11-2.0"A
6Z-2"-LPS1006-3BAA11-1.0"AH
6Z-4"-LPS1007-3BAA11-1.0"AH
6Z-34"-LPS0007-3BAA11-2.0"A
6Z-34"-LPS0009-3BAA11-2.0"A
6Z-3"-LPS0009-3BAA11-2.0"A
CARBON CAPTURE FACILITY LINDE STREAM 3092-1001
6Z-4"-LPS1017-3BAA11-1.0"AH
6Z-2"-LPS1016-3BAA11-1.0"AH
6Z-2"-LPS1002-3BAA11-1.0"AH
PD-630
TO STEAM CONDENSATE
6A-1.5"-LPS0001-3HAA11-1.0"AH
6A-VLPS101
6A-VLPS102
6B-1.5"-LPS0001-3HAA11-1.0"AH
6B-VLPS101
6B-VLPS102
6Z-X"-LPS1008-3HAA11-X
6Z-6"-LPS1013-3HBB11-1.0"AH
6Z-6"-LPS1014-3HBD31-1.0"A
6Z-34"-LPS0008-3HBB11-2.0"A
6Z-34"-LPS0004-3BAA11-2.0"A
6Z-2"-LPS1010-3BAA11-1.0"AH
6Z-4"-LPS1012-3BAA11-1.0"AH
6Z-8"-LPS0003-3HBD31-7"A
6Z-VLPS101
6Z-VLPS103
6Z-VLPS104
6Z-VLPS105
6Z-VLPS107
6Z-VLPS108
6Z-VLPS109
6Z-VLPS110
6Z-VLPS111
6Z-VLPS112
6Z-VLPS113
6Z-VLPS114
6Z-VLPS115
6Z-VLPS116
6Z-VLPS006
6Z-VLPS007
6Z-VLPS012
6Z-VLPS116
6Z-DSH-LPS001
NOTE 3
NOTE 4
NOTE 5
FROM LP SH HEADER TO TURBINE
FROM LP CROSSOVER
FROM HP FEEDWATER UNIT A
FROM HP FEEDWATER UNIT B
FROM HP HEADER
DRAIN
FC
NOTE 2
I/P
- PRELIMINARY -
NOT FOR CONSTRUCTION
0 ISSUED FOR FEED
S. THOMPSON | D. SIVILS | 04-14-23
REV DESIGN BY | CHECKED BY | DATE
ALABAMA POWER COMPANY
GE / SOUTHERN / LINDE ADVANCED NGCC INTEGRATION
Kiewit
PIPING AND INSTRUMENTATION DIAGRAM
LPS - LOW PRESSURE STEAM
ENGINEER/DESIGN ORIGINATOR S. THOMPSON
LEAD ENG D. SIVILS
ENG MGR B. LOFGREEN
PROJ MGR B. LOFGREEN
DRAWING NUMBER
20041223-PD-620

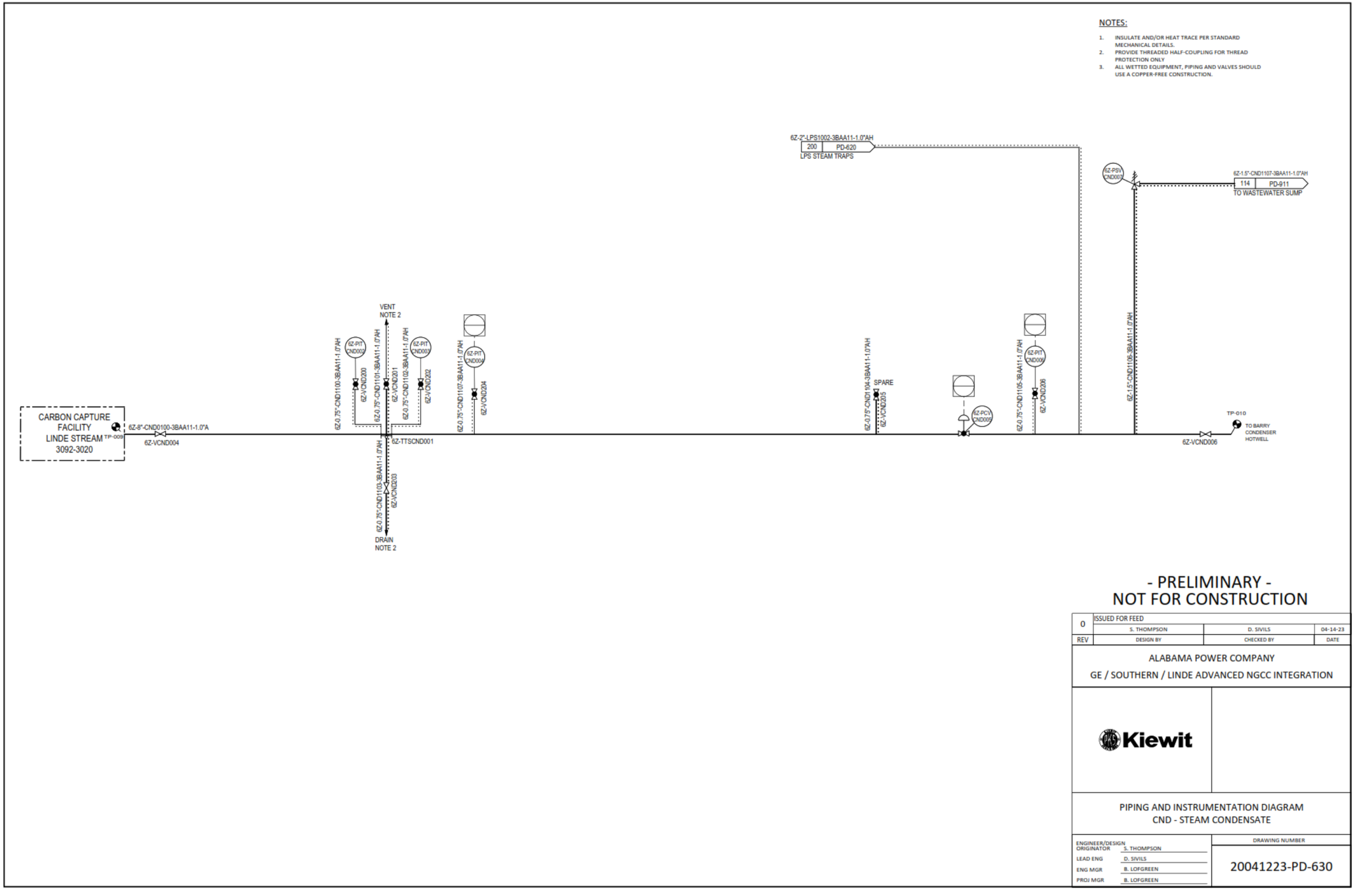
NOTES:
1. INSULATE AND/OR HEAT TRACE PER STANDARD MECHANICAL DETAILS.
2. PROVIDE THREADED HALF-COUPLING FOR THREAD PROTECTION ONLY
3. ALL WETTED EQUIPMENT, PIPING AND VALVES SHOULD USE A COPPER-FREE CONSTRUCTION.
CARBON CAPTURE FACILITY LINDE STREAM TP-009 3092-3020
6Z-8"-CND0100-3BAA11-1.0"A
6Z-VCND004
VENT NOTE 2
6Z-0.75"-CND1100-3BAA11-1.0"AH
6Z-PIT CND002
6Z-VCND200
6Z-0.75"-CND1101-3BAA11-1.0"AH
6Z-VCND201
6Z-0.75"-CND1102-3BAA11-1.0"AH
6Z-PIT CND003
6Z-VCND202
6Z-TTSCND001
6Z-0.75"-CND1107-3BAA11-1.0"AH
6Z-PIT CND004
6Z-VCND204
6Z-0.75"-CND1103-3BAA11-1.0"AH
6Z-VCND203
DRAIN NOTE 2
6Z-2"-LPS1002-3BAA11-1.0"AH
200 PD-620
LPS STEAM TRAPS
6Z-0.75"-CND1104-3BAA11-1.0"AH
SPARE
6Z-VCND205
6Z-PCV CND005
6Z-0.75"-CND1105-3BAA11-1.0"AH
6Z-PIT CND006
6Z-VCND206
6Z-PSV CND007
6Z-1.5"-CND1106-3BAA11-1.0"AH
6Z-1.5"-CND1107-3BAA11-1.0"AH
114 PD-911
TO WASTEWATER SUMP
6Z-VCND006
TP-010
TO BARRY CONDENSER HOTWELL
- PRELIMINARY -
NOT FOR CONSTRUCTION
0 ISSUED FOR FEED
S. THOMPSON | D. SIVILS | 04-14-23
REV | DESIGN BY | CHECKED BY | DATE
ALABAMA POWER COMPANY
GE / SOUTHERN / LINDE ADVANCED NGCC INTEGRATION
Kiewit
PIPING AND INSTRUMENTATION DIAGRAM
CND - STEAM CONDENSATE
ENGINEER/DESIGN ORIGINATOR S. THOMPSON
LEAD ENG D. SIVILS
ENG MGR B. LOFGREEN
PROJ MGR B. LOFGREEN
DRAWING NUMBER
20041223-PD-630

NOTES:

1. INSULATE AND/OR HEAT TRACE PER STANDARD MECHANICAL DETAILS.
2. PROVIDE THREADED HALF-COUPLING FOR THREAD PROTECTION ONLY
3. ALL WETTED EQUIPMENT, PIPING AND VALVES SHOULD USE A COPPER-FREE CONSTRUCTION.

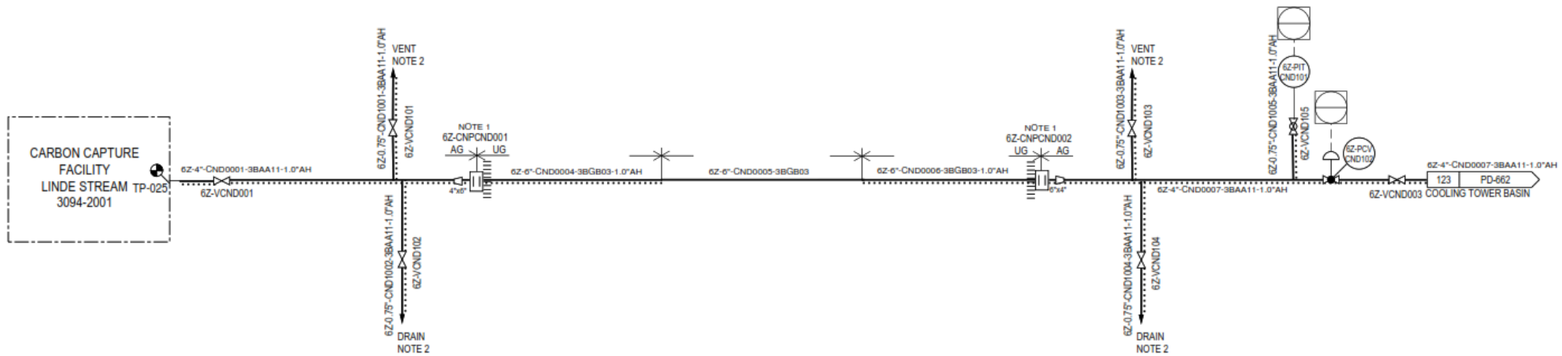

- PRELIMINARY -
NOT FOR CONSTRUCTION

REV	DESIGN BY	CHECKED BY	DATE
0	ISSUED FOR FEED		
	S. THOMPSON	D. SIVILS	04-14-23

ALABAMA POWER COMPANY

GE / SOUTHERN / LINDE ADVANCED NGCC INTEGRATION

Kiewit

PIPING AND INSTRUMENTATION DIAGRAM
CND - PROCESS CONDENSATE

ENGINEER/DESIGN ORIGINATOR	S. THOMPSON
LEAD ENG	D. SIVILS
ENG MGR	B. LOFGREEN
PROJ MGR	B. LOFGREEN

DRAWING NUMBER

20041223-PD-631

NOTES:

1. SEE KIEWIT DWG: (L)
   SEE VENDOR DWG: (L)
2. SEE KIEWIT DWG: (L)
   SEE VENDOR DWG: (L)

MANWAY

6Z-36"-CWS0610-WMHB01

6Z-8"-WW0600-3BGC04
113 PD-910
TO WASTEWATER TIE-IN POINT

6Z-66"-CWS0604-WMHB01
120 PD-661
TO CARBON CAPTURE FACILITY USERS

6Z-0.5"-SMP6000-3LCR01-1.0"AH
118 PD-730
TO SAMPLE PANEL

6Z-CNP-CWS004 AG UG
6Z-48"-CWS6303-WMHB01

6Z-CNP-CWS003 AG UG
6Z-48"-CWS6302-WMHB01

6Z-CNP-CWS002 AG UG
6Z-48"-CWS6301-WMHB01

6Z-CNP-CWS001 AG UG
6Z-24"-CWS6300-WMHB01

6Z-ARV-CWS603 AR
6Z-2"-CWS6303-3BCA01-1.0 "AH
6Z-4"-CWS6303-WMAJ11
6Z-VCWS606 4"x2

6Z-ARV-CWS602 AR
6Z-2"-CWS6302-3BCA01-1.0 "AH
6Z-4"-CWS6302-WMAJ11
6Z-VCWS605 4"x2

6Z-ARV-CWS601 AR
6Z-2"-CWS6202-3BCA01-1.0 "AH
6Z-4"-CWS6202-WMAJ11
6Z-VCWS604 4"x2

6Z-ARV-CWS600 AR
6Z-2"-CWS6102-3BCA01-1.0 "AH
6Z-4"-CWS6102-WMAJ11
6Z-VCWS603 4"x2

6Z-MOV CWS603
CLOSE COMMAND OPEN COMMAND POSITION OPENED CLOSED
6Z-HYH CWS603 6Z-HYL CWS603 6Z-ZT CWS603 6Z-ZSO CWS603 6Z-ZSC CWS603

6Z-MOV CWS602
CLOSE COMMAND OPEN COMMAND POSITION OPENED CLOSED
6Z-HYH CWS602 6Z-HYL CWS602 6Z-ZT CWS602 6Z-ZSO CWS602 6Z-ZSC CWS602

6Z-MOV CWS601
CLOSE COMMAND OPEN COMMAND POSITION OPENED CLOSED
6Z-HYH CWS601 6Z-HYL CWS601 6Z-ZT CWS601 6Z-ZSO CWS601 6Z-ZSC CWS601

6Z-MOV CWS600
CLOSE COMMAND OPEN COMMAND POSITION OPENED CLOSED
6Z-HYH CWS600 6Z-HYL CWS600 6Z-ZT CWS600 6Z-ZSO CWS600 6Z-ZSC CWS600

6Z-TE CWS612 — 6Z-4"-CWS6301-WMAJ11
6Z-TE CWS611 — 6Z-4"-CWS6201-WMAJ11
6Z-TE CWS610 — 6Z-4"-CWS6101-WMAJ11

6Z-PIT CWS612 — 6Z-0.75"-CWS6300-3BCA01 — 6Z-4"-CWS6300-WMAJ11
6Z-VCWS602 4"x0.75"

6Z-PIT CWS611 — 6Z-0.75"-CWS6200-3BCA01 — 6Z-4"-CWS6200-WMAJ11
6Z-VCWS601 4"x0.75"

6Z-PIT CWS610 — 6Z-0.75"-CWS6100-3BCA01 — 6Z-4"-CWS6100-WMAJ11
6Z-VCWS600 4"x0.75"

6Z-2"-CWS6303-WMAJ11
6Z-24"-CWS6302-WMAJ11
6Z-24"-CWS6301-WMAJ11
6Z-24"-CWS6300-WMAJ11

6Z-CWS-MPM-02 — 6Z-EXJ-CWS603
AUXILIARY CIRCULATION WATER PUMP
6Z-CWS-PMP-02
7500 GPM @ LATER FT TDH
NOTE 2

6Z-CWS-MPM-01C — 6Z-EXJ-CWS602
CIRCULATING WATER PUMP C
6Z-CWS-PMP-01C
71227 GPM @ 215 FT TDH
3x50%
NOTE 1

6Z-CWS-MPM-01B — 6Z-EXJ-CWS601
CIRCULATING WATER PUMP B
6Z-CWS-PMP-01B
71227 GPM @ 215 FT TDH
3x50%
NOTE 1

6Z-CWS-MPM-01A — 6Z-EXJ-CWS600
CIRCULATING WATER PUMP A
6Z-CWS-PMP-01A
71227 GPM @ 215 FT TDH
3x50%
NOTE 1

- PRELIMINARY -
NOT FOR CONSTRUCTION

REV	DESIGN BY	CHECKED BY	DATE
0	ISSUED FOR FEED		
	E. HICKMON	D. SIVILS	04-14-23

ALABAMA POWER COMPANY
GE / SOUTHERN / LINDE ADVANCED NGCC INTEGRATION

Kiewit

PIPING AND INSTRUMENTATION DIAGRAM
CWS- CIRCULATING WATER

ENGINEER/DESIGN ORIGINATOR	E. HICKMON
LEAD ENG	D. SIVILS
ENG MGR	B. LOFGREEN
PROJ MGR	B. LOFGREEN

DRAWING NUMBER
20041223-PD-660

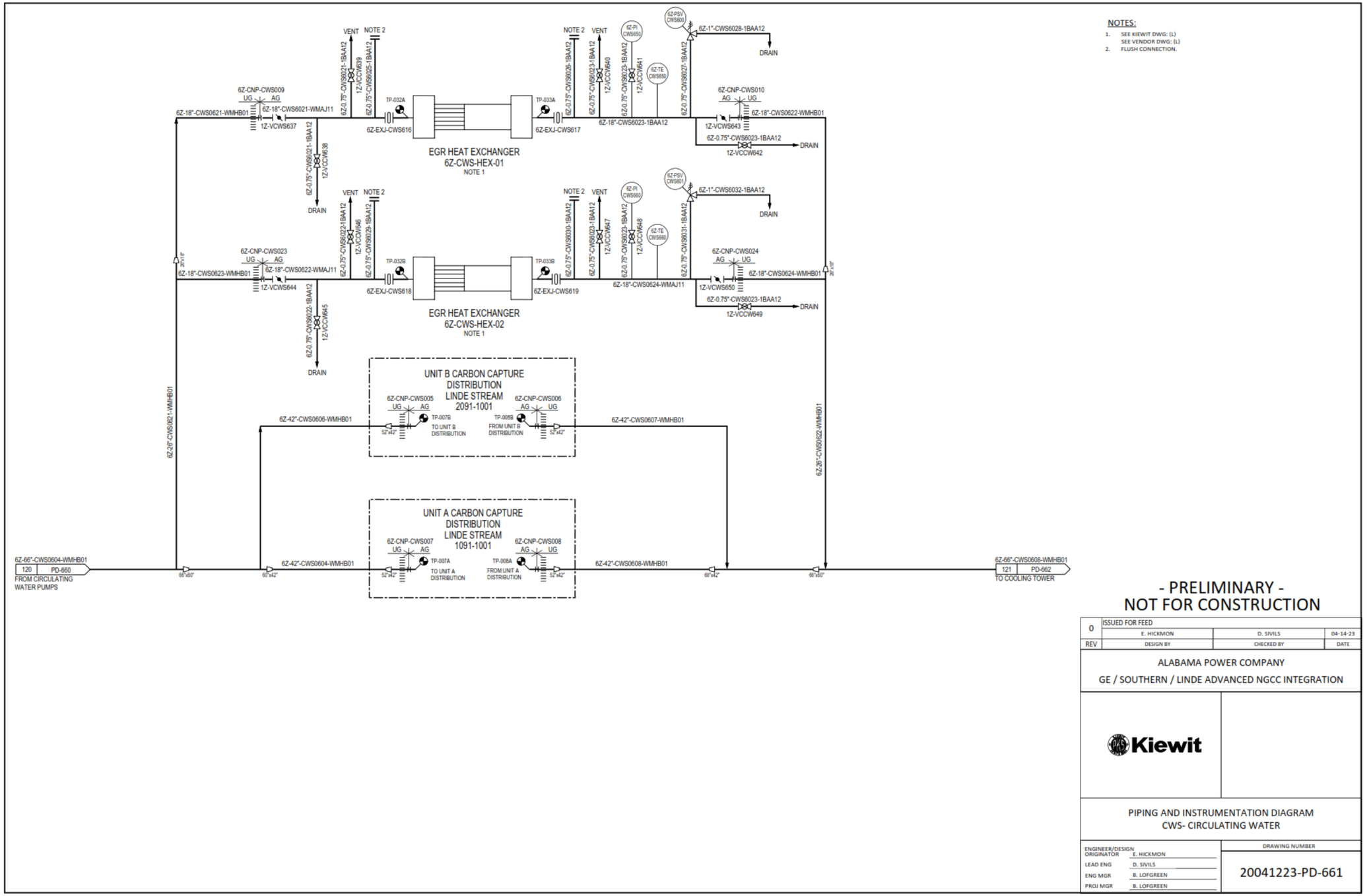
NOTES:
1. SEE KIEWIT DWG: (L)
SEE VENDOR DWG: (L)
2. FLUSH CONNECTION.
EGR HEAT EXCHANGER
6Z-CWS-HEX-01
NOTE 1
EGR HEAT EXCHANGER
6Z-CWS-HEX-02
NOTE 1
UNIT B CARBON CAPTURE
DISTRIBUTION
LINDE STREAM
2091-1001
UNIT A CARBON CAPTURE
DISTRIBUTION
LINDE STREAM
1091-1001
6Z-66"-CWS0604-WMHB01
120 PD-660
FROM CIRCULATING WATER PUMPS
6Z-66"-CWS0608-WMHB01
121 PD-662
TO COOLING TOWER
- PRELIMINARY -
NOT FOR CONSTRUCTION
0 ISSUED FOR FEED
E. HICKMON D. SIVILS 04-14-23
REV DESIGN BY CHECKED BY DATE
ALABAMA POWER COMPANY
GE / SOUTHERN / LINDE ADVANCED NGCC INTEGRATION
Kiewit
PIPING AND INSTRUMENTATION DIAGRAM
CWS- CIRCULATING WATER
ENGINEER/DESIGN ORIGINATOR E. HICKMON
LEAD ENG D. SIVILS
ENG MGR B. LOFGREEN
PROJ MGR B. LOFGREEN
DRAWING NUMBER
20041223-PD-661

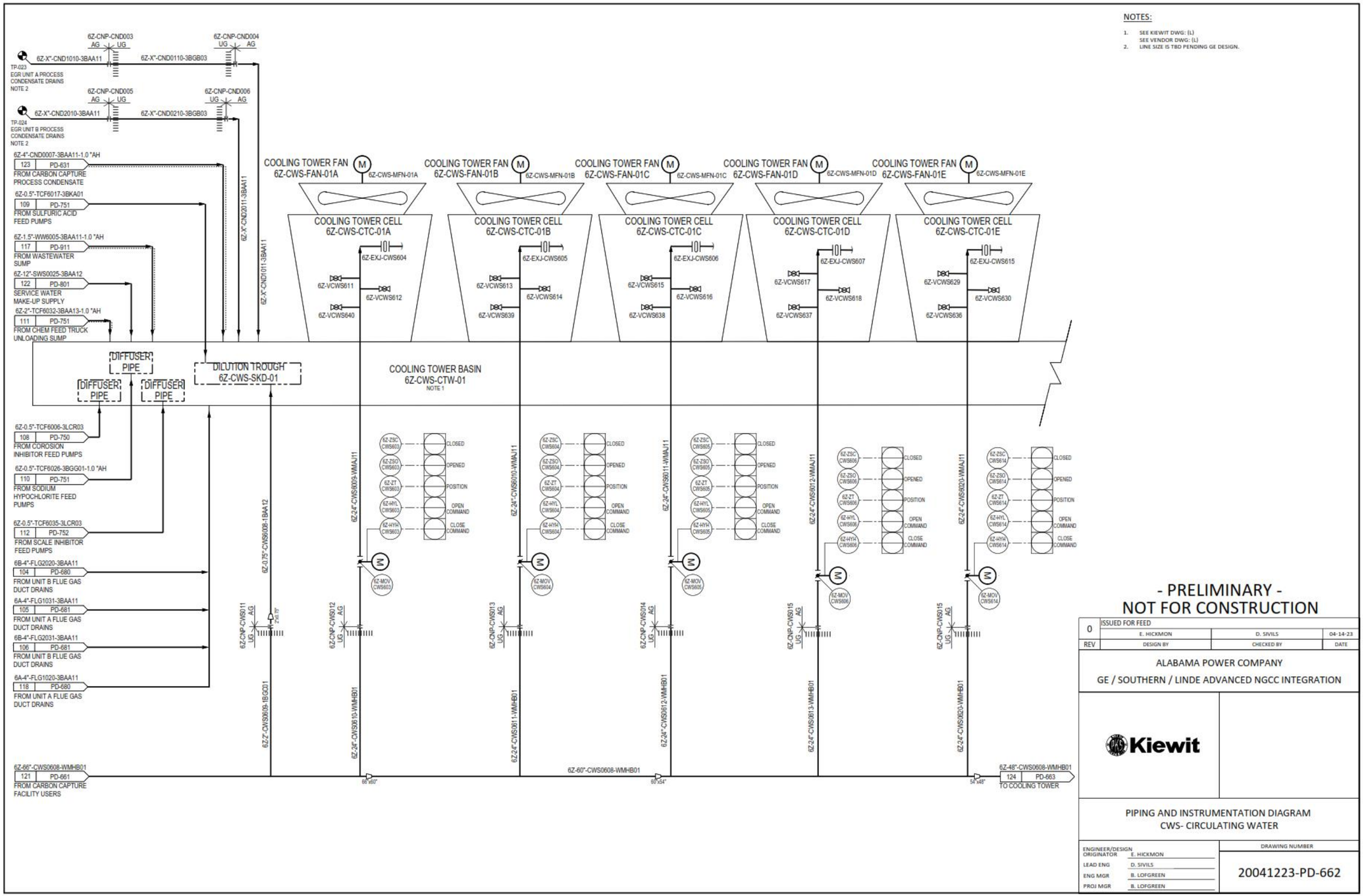
NOTES:
1. SEE KIEWIT DWG: (L)
SEE VENDOR DWG: (L)
2. LINE SIZE IS TBD PENDING GE DESIGN.
6Z-CNP-CND003
6Z-CNP-CND004
6Z-X"-CND1010-3BAA11
6Z-X"-CND0110-3BGB03
TP-023
EGR UNIT A PROCESS CONDENSATE DRAINS
NOTE 2
6Z-CNP-CND005
6Z-CNP-CND006
6Z-X"-CND2010-3BAA11
6Z-X"-CND0210-3BGB03
TP-024
EGR UNIT B PROCESS CONDENSATE DRAINS
NOTE 2
6Z-4"-CND0007-3BAA11-1.0 "AH
123 PD-631
FROM CARBON CAPTURE PROCESS CONDENSATE
6Z-0.5"-TCF6017-3BKA01
109 PD-751
FROM SULFURIC ACID FEED PUMPS
6Z-1.5"-WW6005-3BAA11-1.0 "AH
117 PD-911
FROM WASTEWATER SUMP
6Z-12"-SWS0025-3BAA12
122 PD-801
SERVICE WATER MAKE-UP SUPPLY
6Z-2"-TCF6032-3BAA13-1.0 "AH
111 PD-751
FROM CHEM FEED TRUCK UNLOADING SUMP
6Z-X"-CND2011-3BAA11
6Z-X"-CND1011-3BAA11
COOLING TOWER FAN 6Z-CWS-FAN-01A
COOLING TOWER FAN 6Z-CWS-FAN-01B
COOLING TOWER FAN 6Z-CWS-FAN-01C
COOLING TOWER FAN 6Z-CWS-FAN-01D
COOLING TOWER FAN 6Z-CWS-FAN-01E
6Z-CWS-MFN-01A
6Z-CWS-MFN-01B
6Z-CWS-MFN-01C
6Z-CWS-MFN-01D
6Z-CWS-MFN-01E
COOLING TOWER CELL 6Z-CWS-CTC-01A
COOLING TOWER CELL 6Z-CWS-CTC-01B
COOLING TOWER CELL 6Z-CWS-CTC-01C
COOLING TOWER CELL 6Z-CWS-CTC-01D
COOLING TOWER CELL 6Z-CWS-CTC-01E
6Z-EXJ-CWS604
6Z-EXJ-CWS605
6Z-EXJ-CWS606
6Z-EXJ-CWS607
6Z-EXJ-CWS615
6Z-VCWS611
6Z-VCWS612
6Z-VCWS640
6Z-VCWS613
6Z-VCWS614
6Z-VCWS639
6Z-VCWS615
6Z-VCWS616
6Z-VCWS638
6Z-VCWS617
6Z-VCWS618
6Z-VCWS637
6Z-VCWS629
6Z-VCWS630
6Z-VCWS636
DIFFUSER PIPE
DILUTION TROUGH 6Z-CWS-SKD-01
COOLING TOWER BASIN 6Z-CWS-CTW-01
NOTE 1
6Z-0.5"-TCF6006-3LCR03
108 PD-750
FROM CORROSION INHIBITOR FEED PUMPS
6Z-0.5"-TCF6026-3BGG01-1.0 "AH
110 PD-751
FROM SODIUM HYPOCHLORITE FEED PUMPS
6Z-0.5"-TCF6035-3LCR03
112 PD-752
FROM SCALE INHIBITOR FEED PUMPS
6B-4"-FLG2020-3BAA11
104 PD-680
FROM UNIT B FLUE GAS DUCT DRAINS
6A-4"-FLG1031-3BAA11
105 PD-681
FROM UNIT A FLUE GAS DUCT DRAINS
6B-4"-FLG2031-3BAA11
106 PD-681
FROM UNIT B FLUE GAS DUCT DRAINS
6A-4"-FLG1020-3BAA11
118 PD-680
FROM UNIT A FLUE GAS DUCT DRAINS
6Z-0.75"-CWS6008-1BAA12
6Z-2"-CWS6009-1BGD01
6Z-2"-CWS6010-WMHB01
6Z-2"-CWS6011-WMHB01
6Z-2"-CWS6012-WMHB01
6Z-2"-CWS6013-WMHB01
6Z-2"-CWS6020-WMHB01
6Z-2"-CWS6009-WMAJ11
6Z-2"-CWS6010-WMAJ11
6Z-2"-CWS6011-WMAJ11
6Z-2"-CWS6012-WMAJ11
6Z-2"-CWS6020-WMAJ11
6Z-CNP-CWS011
6Z-CNP-CWS012
6Z-CNP-CWS013
6Z-CNP-CWS014
6Z-CNP-CWS015
6Z-ZSC CWS603
6Z-ZSO CWS603
6Z-ZT CWS603
6Z-HYL CWS603
6Z-HYH CWS603
6Z-MOV CWS603
6Z-ZSC CWS604
6Z-ZSO CWS604
6Z-ZT CWS604
6Z-HYL CWS604
6Z-HYH CWS604
6Z-MOV CWS604
6Z-ZSC CWS605
6Z-ZSO CWS605
6Z-ZT CWS605
6Z-HYL CWS605
6Z-HYH CWS605
6Z-MOV CWS605
6Z-ZSC CWS606
6Z-ZSO CWS606
6Z-ZT CWS606
6Z-HYL CWS606
6Z-HYH CWS606
6Z-MOV CWS606
6Z-ZSC CWS614
6Z-ZSO CWS614
6Z-ZT CWS614
6Z-HYL CWS614
6Z-HYH CWS614
6Z-MOV CWS614
CLOSED
OPENED
POSITION
OPEN COMMAND
CLOSE COMMAND
6Z-66"-CWS0608-WMHB01
121 PD-661
FROM CARBON CAPTURE FACILITY USERS
6Z-60"-CWS0608-WMHB01
6Z-48"-CWS0608-WMHB01
124 PD-663
TO COOLING TOWER
- PRELIMINARY -
NOT FOR CONSTRUCTION
0 ISSUED FOR FEED
E. HICKMON
D. SIVILS
04-14-23
REV
DESIGN BY
CHECKED BY
DATE
ALABAMA POWER COMPANY
GE / SOUTHERN / LINDE ADVANCED NGCC INTEGRATION
Kiewit
PIPING AND INSTRUMENTATION DIAGRAM
CWS- CIRCULATING WATER
ENGINEER/DESIGN ORIGINATOR E. HICKMON
LEAD ENG D. SIVILS
ENG MGR B. LOFGREEN
PROJ MGR B. LOFGREEN
DRAWING NUMBER
20041223-PD-662

NOTES:

1. SEE KIEWIT DWG: (L)
   SEE VENDOR DWG: (L)

COOLING TOWER FAN 6Z-CWS-FAN-01F (M) 6Z-CWS-MFN-01F
COOLING TOWER FAN 6Z-CWS-FAN-01G (M) 6Z-CWS-MFN-01G
COOLING TOWER FAN 6Z-CWS-FAN-01H (M) 6Z-CWS-MFN-01H
COOLING TOWER FAN 6Z-CWS-FAN-01I (M) 6Z-CWS-MFN-01I
COOLING TOWER FAN 6Z-CWS-FAN-01J (M) 6Z-CWS-MFN-01J

COOLING TOWER CELL 6Z-CWS-CTC-01F
6Z-EXJ-CWS609
6Z-VCWS619
6Z-VCWS620
6Z-VCWS635

COOLING TOWER CELL 6Z-CWS-CTC-01G
6Z-EXJ-CWS610
6Z-VCWS621
6Z-VCWS622
6Z-VCWS634

COOLING TOWER CELL 6Z-CWS-CTC-01H
6Z-EXJ-CWS611
6Z-VCWS623
6Z-VCWS624
6Z-VCWS633

COOLING TOWER CELL 6Z-CWS-CTC-01I
6Z-EXJ-CWS612
6Z-VCWS625
6Z-VCWS626
6Z-VCWS632

COOLING TOWER CELL 6Z-CWS-CTC-01J
6Z-EXJ-CWS614
6Z-VCWS627
6Z-VCWS628
6Z-VCWS631

COOLING TOWER BASIN 6Z-CWS-CTW-01
NOTE 1

6Z-EXJ-CWS608
6Z-EXJ-CWS613

6Z-ZSC CWS607 — CLOSED
6Z-ZSO CWS607 — OPENED
6Z-ZT CWS607 — POSITION
6Z-HYL CWS607 — OPEN COMMAND
6Z-HYH CWS607 — CLOSE COMMAND
6Z-MOV CWS607
6Z-24"-CWS0613-WMAJ11

6Z-ZSC CWS608 — CLOSED
6Z-ZSO CWS608 — OPENED
6Z-ZT CWS608 — POSITION
6Z-HYL CWS608 — OPEN COMMAND
6Z-HYH CWS608 — CLOSE COMMAND
6Z-MOV CWS608
6Z-24"-CWS0614-WMAJ11

6Z-ZSC CWS609 — CLOSED
6Z-ZSO CWS609 — OPENED
6Z-ZT CWS609 — POSITION
6Z-HYL CWS609 — OPEN COMMAND
6Z-HYH CWS609 — CLOSE COMMAND
6Z-MOV CWS609
6Z-24"-CWS0615-WMAJ11

6Z-ZSC CWS610 — CLOSED
6Z-ZSO CWS610 — OPENED
6Z-ZT CWS610 — POSITION
6Z-HYL CWS610 — OPEN COMMAND
6Z-HYH CWS610 — CLOSE COMMAND
6Z-MOV CWS610
6Z-24"-CWS0616-WMAJ11

6Z-ZSC CWS611 — CLOSED
6Z-ZSO CWS611 — OPENED
6Z-ZT CWS611 — POSITION
6Z-HYL CWS611 — OPEN COMMAND
6Z-HYH CWS611 — CLOSE COMMAND
6Z-MOV CWS611
6Z-24"-CWS0617-WMAJ11

6Z-ZSC CWS613 — CLOSED
6Z-ZSO CWS613 — OPENED
6Z-ZT CWS613 — POSITION
6Z-HYL CWS613 — OPEN COMMAND
6Z-HYH CWS613 — CLOSE COMMAND
6Z-MOV CWS613
6Z-24"-CWS0619-WMAJ11

6Z-ZSC CWS612 — CLOSED
6Z-ZSO CWS612 — OPENED
6Z-ZT CWS612 — POSITION
6Z-HYL CWS612 — OPEN COMMAND
6Z-HYH CWS612 — CLOSE COMMAND
6Z-MOV CWS612
6Z-24"-CWS0618-WMAJ11

6Z-CNP-CWS016 UG AG
6Z-24"-CWS0614-WMHB01

6Z-CNP-CWS017 UG AG
6Z-24"-CWS0615-WMHB01

6Z-CNP-CWS018 UG AG
6Z-24"-CWS0616-WMHB01

6Z-CNP-CWS019 UG AG
6Z-24"-CWS0617-WMHB01

6Z-CNP-CWS020 UG AG
6Z-24"-CWS0618-WMHB01

6Z-CNP-CWS022 UG AG
6Z-24"-CWS0619-WMHB01

6Z-CNP-CWS021 UG AG
6Z-24"-CWS0608-WMHB01

6Z-48"-CWS0608-WMHB01
124 PD-662
FROM CARBON CAPTURE FACILITY USERS

48"x42"

6Z-42"-CWS0608-WMHB01

42"x30"

30"x24"

- PRELIMINARY -
NOT FOR CONSTRUCTION

REV			
0	ISSUED FOR FEED		
	E. HICKMON	D. SIVILS	04-14-23
	DESIGN BY	CHECKED BY	DATE

ALABAMA POWER COMPANY
GE / SOUTHERN / LINDE ADVANCED NGCC INTEGRATION

Kiewit

PIPING AND INSTRUMENTATION DIAGRAM
CWS- CIRCULATING WATER

ENGINEER/DESIGN ORIGINATOR	E. HICKMON
LEAD ENG	D. SIVILS
ENG MGR	B. LOFGREEN
PROJ MGR	B. LOFGREEN

DRAWING NUMBER
20041223-PD-663

NOTES:

1. TERMINATION POINT LOCATED AT SW CORNER OF PLANT BARRY UNIT 6.

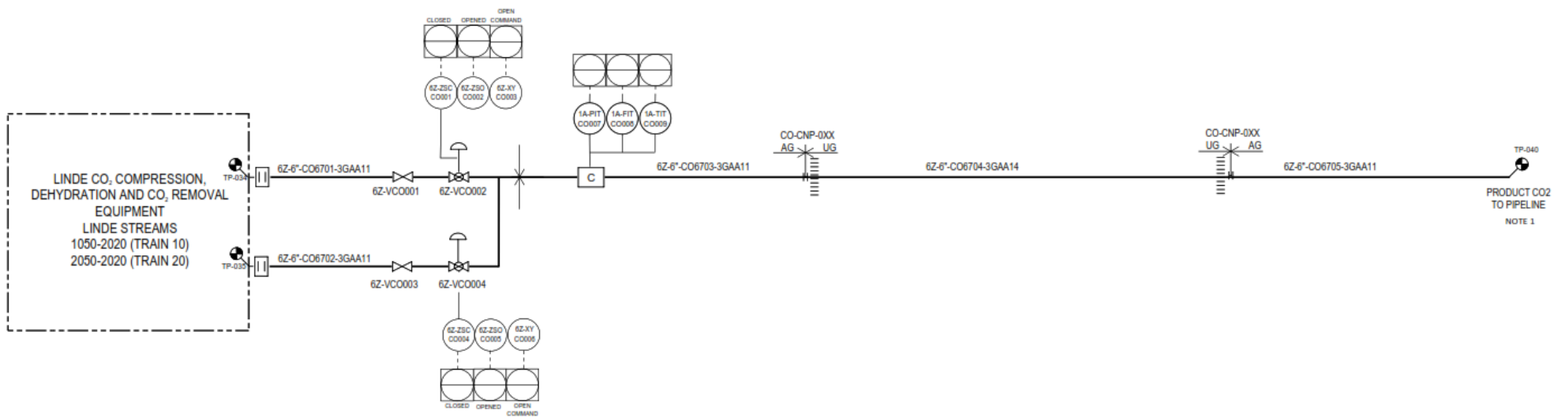

- PRELIMINARY -
NOT FOR CONSTRUCTION

REV	DESIGN BY	CHECKED BY	DATE
0	ISSUED FOR FEED S. THOMPSON	D. SIVILS	04-14-23

ALABAMA POWER COMPANY

GE / SOUTHERN / LINDE ADVANCED NGCC INTEGRATION

Kiewit

PIPING AND INSTRUMENTATION DIAGRAM
CO - CARBON DIOXIDE

		DRAWING NUMBER
ENGINEER/DESIGN ORIGINATOR	S. THOMPSON	20041223-PD-670
LEAD ENG	D. SIVILS	
ENG MGR	B. LOFGREEN	
PROJ MGR	B. LOFGREEN	

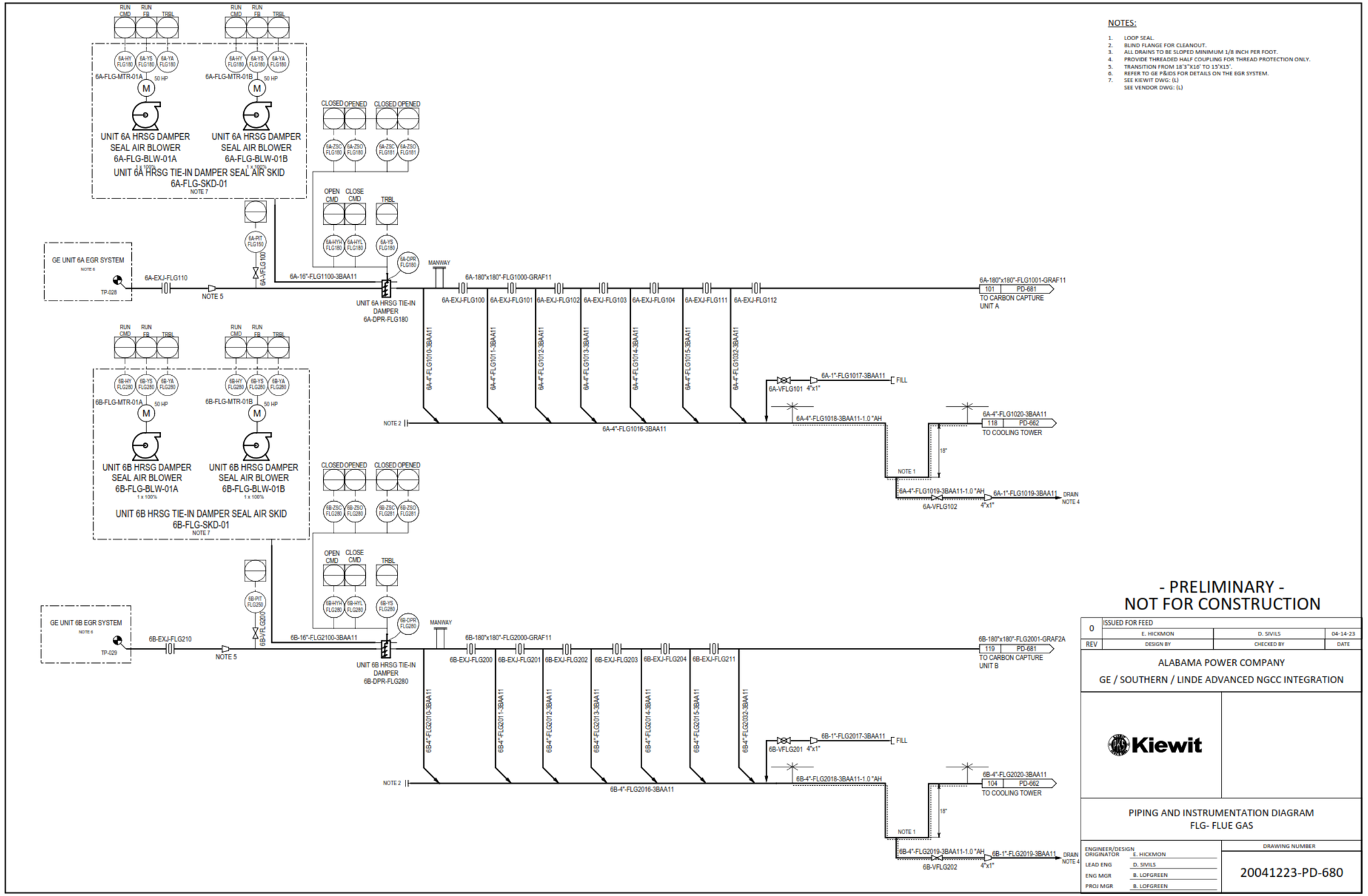
NOTES:
1. LOOP SEAL.
2. BLIND FLANGE FOR CLEANOUT.
3. ALL DRAINS TO BE SLOPED MINIMUM 1/8 INCH PER FOOT.
4. PROVIDE THREADED HALF COUPLING FOR THREAD PROTECTION ONLY.
5. TRANSITION FROM 18'3"X16' TO 15'X15'.
6. REFER TO GE P&IDS FOR DETAILS ON THE EGR SYSTEM.
7. SEE KIEWIT DWG: (L)
SEE VENDOR DWG: (L)
6A-FLG-MTR-01A
6A-FLG-MTR-01B
UNIT 6A HRSG DAMPER SEAL AIR BLOWER 6A-FLG-BLW-01A
UNIT 6A HRSG DAMPER SEAL AIR BLOWER 6A-FLG-BLW-01B
UNIT 6A HRSG TIE-IN DAMPER SEAL AIR SKID 6A-FLG-SKD-01
GE UNIT 6A EGR SYSTEM
TP-028
6A-EXJ-FLG110
6A-16"-FLG1100-3BAA11
UNIT 6A HRSG TIE-IN DAMPER 6A-DPR-FLG180
6A-180"x180"-FLG1000-GRAF11
6A-180"x180"-FLG1001-GRAF11
101 PD-681
TO CARBON CAPTURE UNIT A
6A-4"-FLG1016-3BAA11
6A-1"-FLG1017-3BAA11
6A-VFLG101
6A-4"-FLG1018-3BAA11-1.0 "AH
6A-4"-FLG1020-3BAA11
118 PD-662
TO COOLING TOWER
6A-4"-FLG1019-3BAA11-1.0 "AH
6A-VFLG102
6A-1"-FLG1019-3BAA11
6B-FLG-MTR-01A
6B-FLG-MTR-01B
UNIT 6B HRSG DAMPER SEAL AIR BLOWER 6B-FLG-BLW-01A
UNIT 6B HRSG DAMPER SEAL AIR BLOWER 6B-FLG-BLW-01B
UNIT 6B HRSG TIE-IN DAMPER SEAL AIR SKID 6B-FLG-SKD-01
GE UNIT 6B EGR SYSTEM
TP-029
6B-EXJ-FLG210
6B-16"-FLG2100-3BAA11
UNIT 6B HRSG TIE-IN DAMPER 6B-DPR-FLG280
6B-180"x180"-FLG2000-GRAF11
6B-180"x180"-FLG2001-GRAF2A
119 PD-681
TO CARBON CAPTURE UNIT B
6B-4"-FLG2016-3BAA11
6B-1"-FLG2017-3BAA11
6B-VFLG201
6B-4"-FLG2018-3BAA11-1.0 "AH
6B-4"-FLG2020-3BAA11
104 PD-662
TO COOLING TOWER
6B-4"-FLG2019-3BAA11-1.0 "AH
6B-VFLG202
6B-1"-FLG2019-3BAA11
- PRELIMINARY -
NOT FOR CONSTRUCTION
0 ISSUED FOR FEED
E. HICKMON D. SIVILS 04-14-23
REV DESIGN BY CHECKED BY DATE
ALABAMA POWER COMPANY
GE / SOUTHERN / LINDE ADVANCED NGCC INTEGRATION
Kiewit
PIPING AND INSTRUMENTATION DIAGRAM
FLG- FLUE GAS
ENGINEER/DESIGN ORIGINATOR E. HICKMON
LEAD ENG D. SIVILS
ENG MGR B. LOFGREEN
PROJ MGR B. LOFGREEN
DRAWING NUMBER
20041223-PD-680

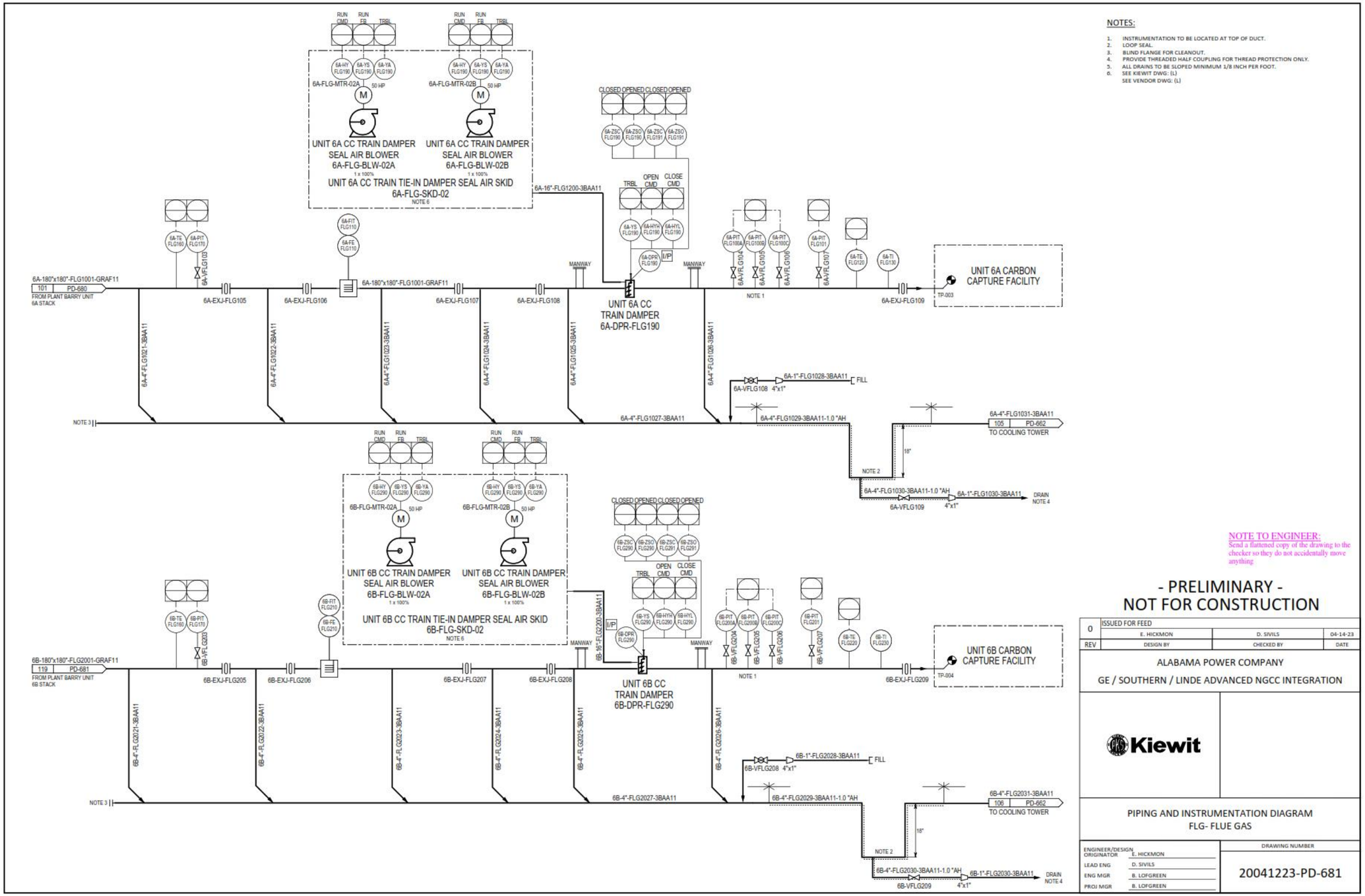
NOTES:
1. INSTRUMENTATION TO BE LOCATED AT TOP OF DUCT.
2. LOOP SEAL.
3. BLIND FLANGE FOR CLEANOUT.
4. PROVIDE THREADED HALF COUPLING FOR THREAD PROTECTION ONLY.
5. ALL DRAINS TO BE SLOPED MINIMUM 1/8 INCH PER FOOT.
6. SEE KIEWIT DWG: (L)
SEE VENDOR DWG: (L)
UNIT 6A CC TRAIN DAMPER SEAL AIR BLOWER 6A-FLG-BLW-02A
UNIT 6A CC TRAIN DAMPER SEAL AIR BLOWER 6A-FLG-BLW-02B
UNIT 6A CC TRAIN TIE-IN DAMPER SEAL AIR SKID 6A-FLG-SKD-02
UNIT 6A CC TRAIN DAMPER 6A-DPR-FLG190
UNIT 6A CARBON CAPTURE FACILITY
UNIT 6B CC TRAIN DAMPER SEAL AIR BLOWER 6B-FLG-BLW-02A
UNIT 6B CC TRAIN DAMPER SEAL AIR BLOWER 6B-FLG-BLW-02B
UNIT 6B CC TRAIN TIE-IN DAMPER SEAL AIR SKID 6B-FLG-SKD-02
UNIT 6B CC TRAIN DAMPER 6B-DPR-FLG290
UNIT 6B CARBON CAPTURE FACILITY
NOTE TO ENGINEER:
Send a flattened copy of the drawing to the checker so they do not accidentally move anything
- PRELIMINARY -
NOT FOR CONSTRUCTION
ISSUED FOR FEED
E. HICKMON
D. SIVILS
04-14-23
ALABAMA POWER COMPANY
GE / SOUTHERN / LINDE ADVANCED NGCC INTEGRATION
Kiewit
PIPING AND INSTRUMENTATION DIAGRAM
FLG- FLUE GAS
ENGINEER/DESIGN ORIGINATOR E. HICKMON
LEAD ENG D. SIVILS
ENG MGR B. LOFGREEN
PROJ MGR B. LOFGREEN
DRAWING NUMBER
20041223-PD-681

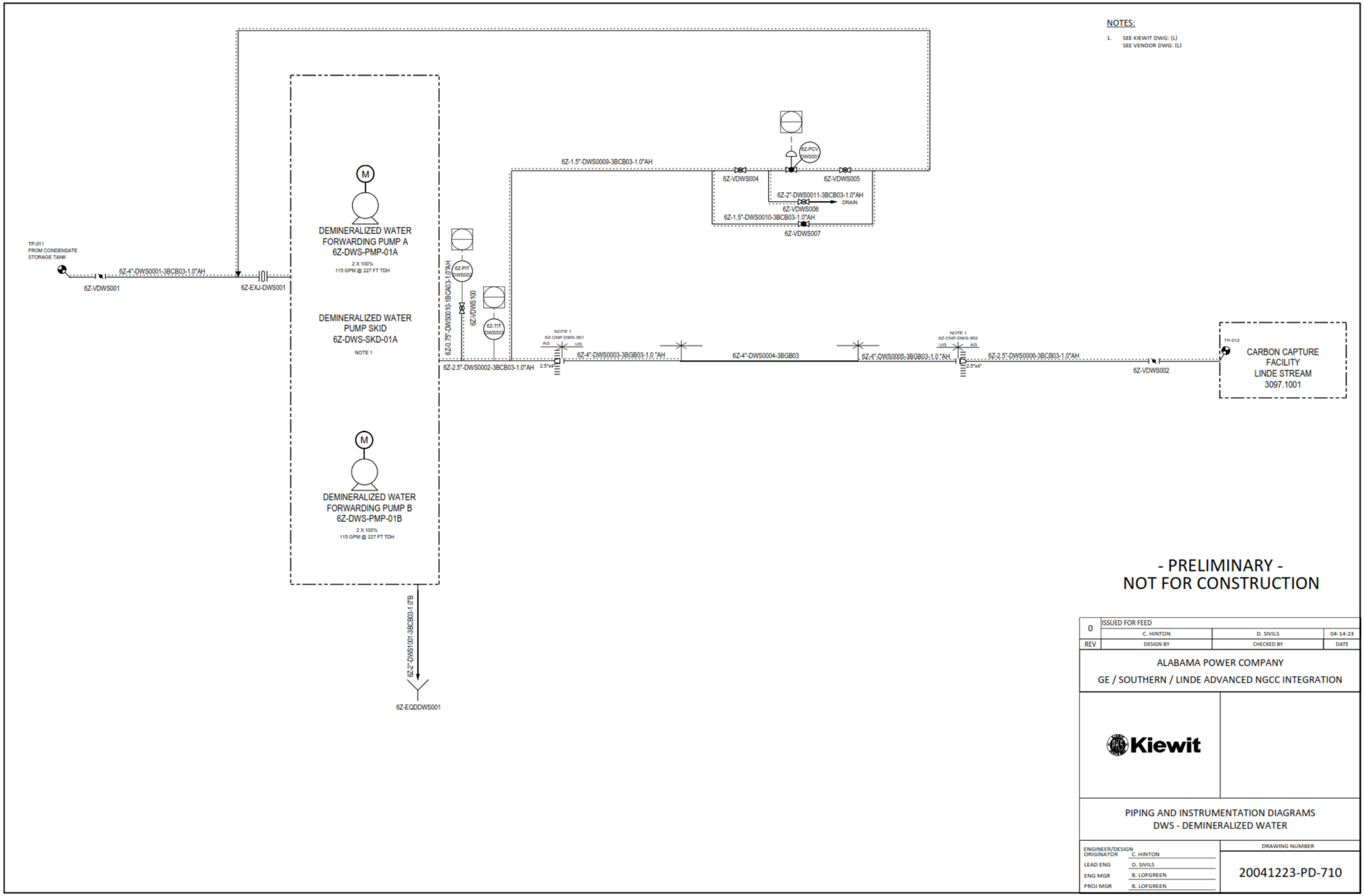
NOTES:
1. SEE KIEWIT DWG: (L)
SEE VENDOR DWG: (L)
TP-011
FROM CONDENSATE
STORAGE TANK
6Z-4"-DWS0001-3BCB03-1.0"AH
6Z-VDWS001
6Z-EXJ-DWS001
DEMINERALIZED WATER
FORWARDING PUMP A
6Z-DWS-PMP-01A
2 X 100%
115 GPM @ 227 FT TDH
DEMINERALIZED WATER
PUMP SKID
6Z-DWS-SKD-01A
NOTE 1
DEMINERALIZED WATER
FORWARDING PUMP B
6Z-DWS-PMP-01B
2 X 100%
115 GPM @ 227 FT TDH
6Z-2"-DWS1001-3BCB03-1.0"B
6Z-EQDDWS001
6Z-1.5"-DWS0009-3BCB03-1.0"AH
6Z-PCV DWS005
6Z-VDWS004
6Z-VDWS005
6Z-2"-DWS0011-3BCB03-1.0"AH
DRAIN
6Z-VDWS006
6Z-1.5"-DWS0010-3BCB03-1.0"AH
6Z-VDWS007
6Z-0.75"-DWS0010-1BCA03-1.0"AH
6Z-PIT DWS002
6Z-VDWS100
6Z-TIT DWS003
6Z-2.5"-DWS0002-3BCB03-1.0"AH
NOTE 1
6Z-CNP-DWS-001
AG
UG
2.5"x4"
6Z-4"-DWS0003-3BGB03-1.0"AH
6Z-4"-DWS0004-3BGB03
6Z-4"-DWS0005-3BGB03-1.0"AH
NOTE 1
6Z-CNP-DWS-002
UG
AG
2.5"x4"
6Z-2.5"-DWS0006-3BCB03-1.0"AH
6Z-VDWS002
TP-012
CARBON CAPTURE
FACILITY
LINDE STREAM
3097.1001
- PRELIMINARY -
NOT FOR CONSTRUCTION
0
ISSUED FOR FEED
REV
C. HINTON
DESIGN BY
D. SIVILS
CHECKED BY
04-14-23
DATE
ALABAMA POWER COMPANY
GE / SOUTHERN / LINDE ADVANCED NGCC INTEGRATION
Kiewit
PIPING AND INSTRUMENTATION DIAGRAMS
DWS - DEMINERALIZED WATER
ENGINEER/DESIGN ORIGINATOR C. HINTON
LEAD ENG D. SIVILS
ENG MGR B. LOFGREEN
PROJ MGR B. LOFGREEN
DRAWING NUMBER
20041223-PD-710

NOTES:

1. NOT USED.
2. SEE KIEWIT DWG: (L)
   SEE VENDOR DWG: (L)
3. PROVIDE THREADED HALF COUPLING FOR THREAD PROTECTION ONLY.
4. ALL SAMPLE LINES SHALL BE ROUTED WITHOUT POCKETS.
5. SAMPLE TUBING SHALL BE ROUTED IN A PRE-INSULATED AND HEAT TRACED TUBE BUNDLE.

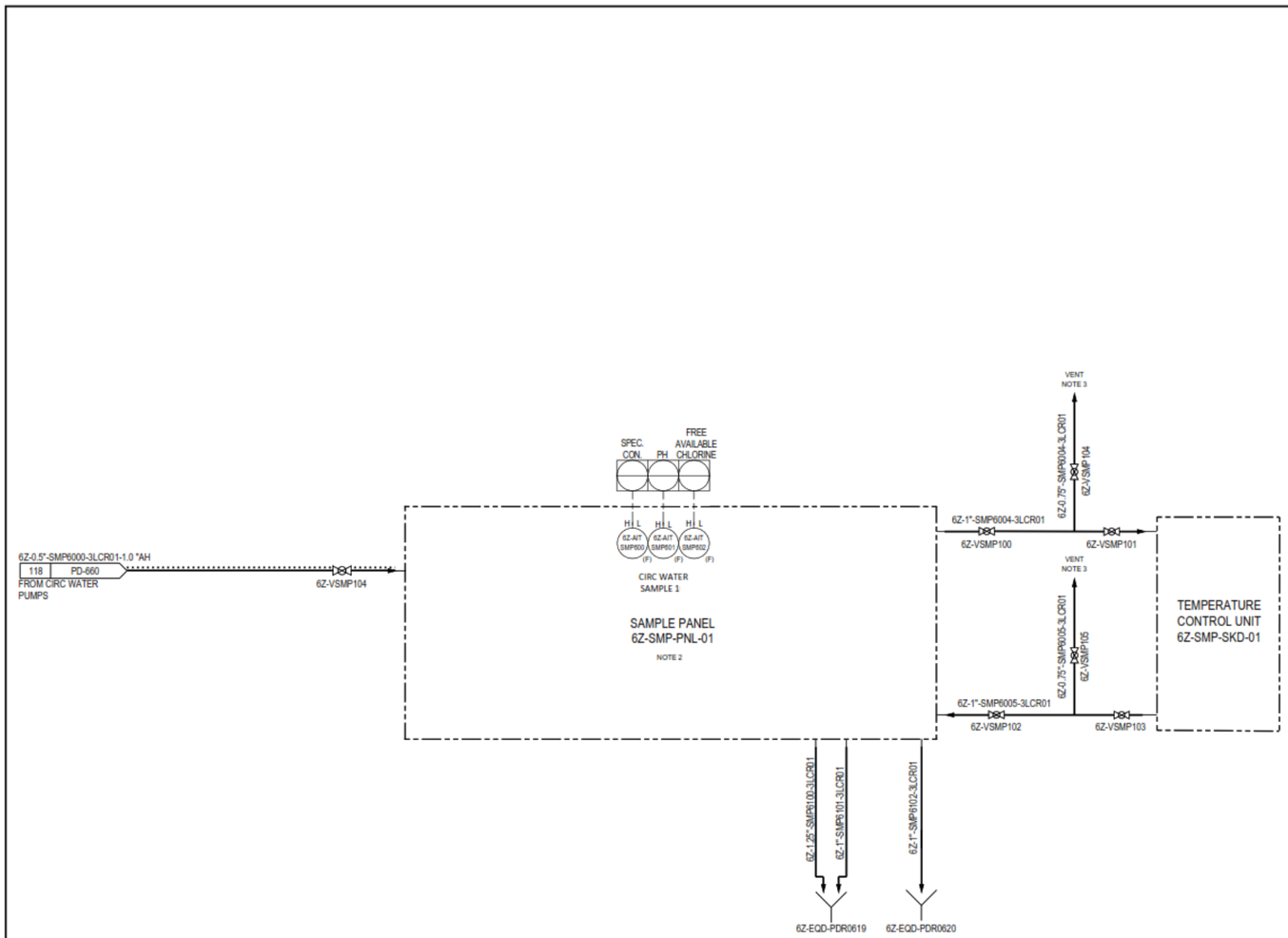

- PRELIMINARY -
NOT FOR CONSTRUCTION

REV	DESIGN BY	CHECKED BY	DATE
0	ISSUED FOR FEED E. HICKMON	D. SIVILS	04-14-23

ALABAMA POWER COMPANY

GE / SOUTHERN / LINDE ADVANCED NGCC INTEGRATION

Kiewit

PIPING AND INSTRUMENTATION DIAGRAM
SMP- SAMPLING

		DRAWING NUMBER
ENGINEER/DESIGN ORIGINATOR	E. HICKMON	20041223-PD-730
LEAD ENG	D. SIVILS	
ENG MGR	B. LOFGREEN	
PROJ MGR	B. LOFGREEN	

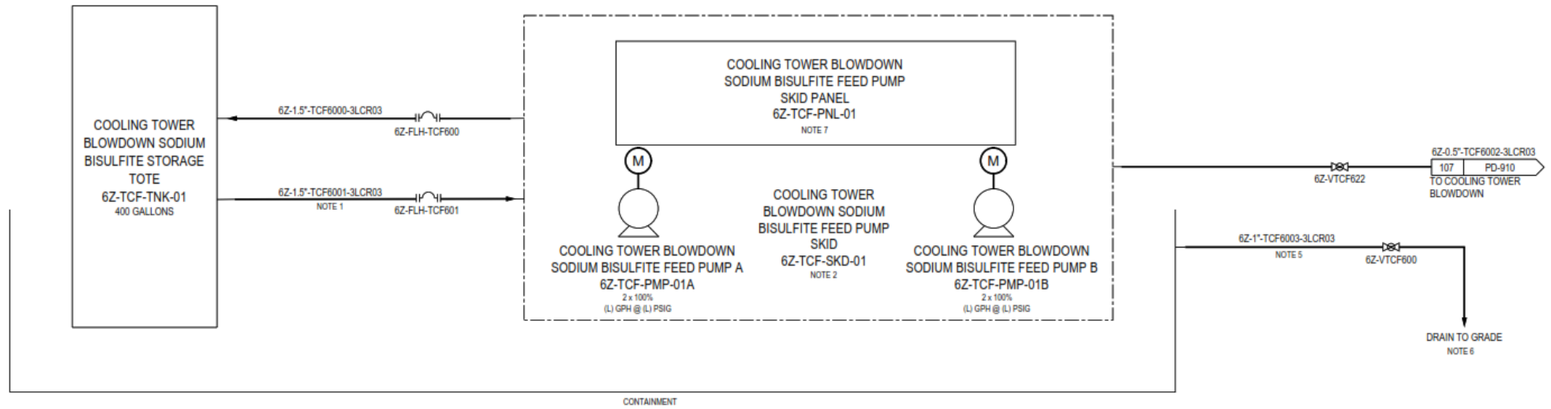

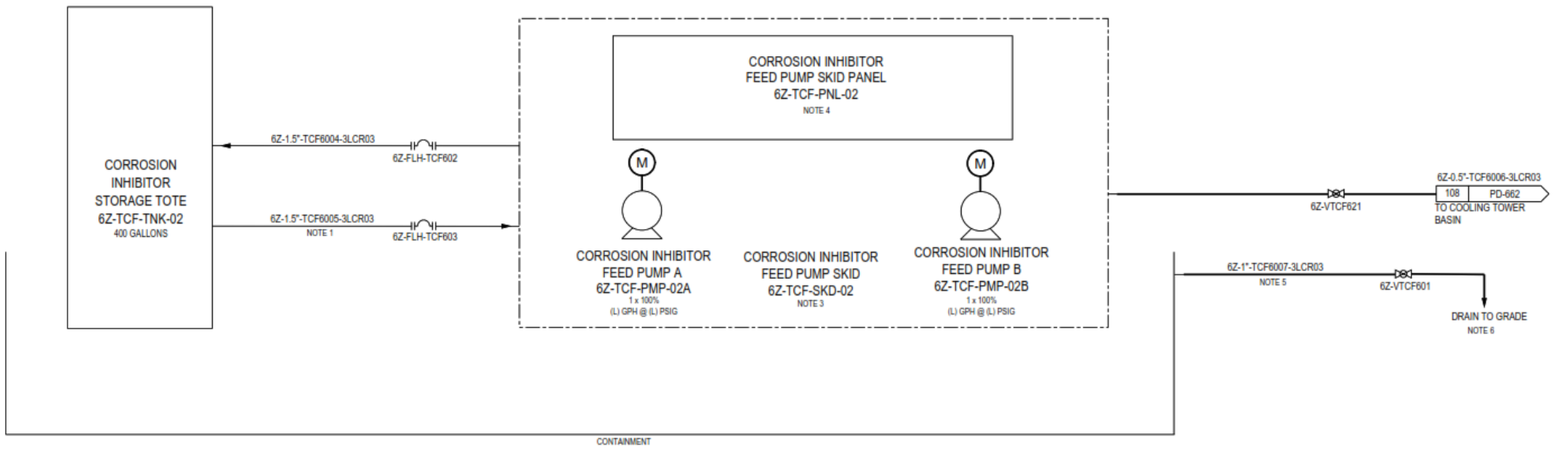

NOTES:

1. SUCTION TUBING SHALL BE SLOPED 1/4" PER FOOT MINIMUM TOWARD SKID WITHOUT POCKETS.
2. SEE KIEWIT DWG: (L)
   SEE VENDOR DWG: (L)
3. SEE KIEWIT DWG: (L)
   SEE VENDOR DWG: (L)
4. SEE KIEWIT DWG: (L)
   SEE VENDOR DWG: (L)
5. SLOPE 1/8" PER FOOT.
6. THREADED HALF COUPLING TO BE INSTALLED DURING PIPE SHIPPING FOR THREAD PROTECTION. COUPLING MAY BE REPLACED AFTER PIPING INSTALLATION.
7. SEE KIEWIT DWG: (L)
   SEE VENDOR DWG: (L)

- PRELIMINARY -
NOT FOR CONSTRUCTION

REV			
0	ISSUED FOR FEED		
REV	E. HICKMON DESIGN BY	D. SIVILS CHECKED BY	04-14-23 DATE

ALABAMA POWER COMPANY

GE / SOUTHERN / LINDE ADVANCED NGCC INTEGRATION

Kiewit

PIPING AND INSTRUMENTATION DIAGRAM
TCF- COOLING TOWER CHEMICAL FEED

ENGINEER/DESIGN ORIGINATOR	E. HICKMON
LEAD ENG	D. SIVILS
ENG MGR	B. LOFGREEN
PROJ MGR	B. LOFGREEN

DRAWING NUMBER

20041223-PD-750

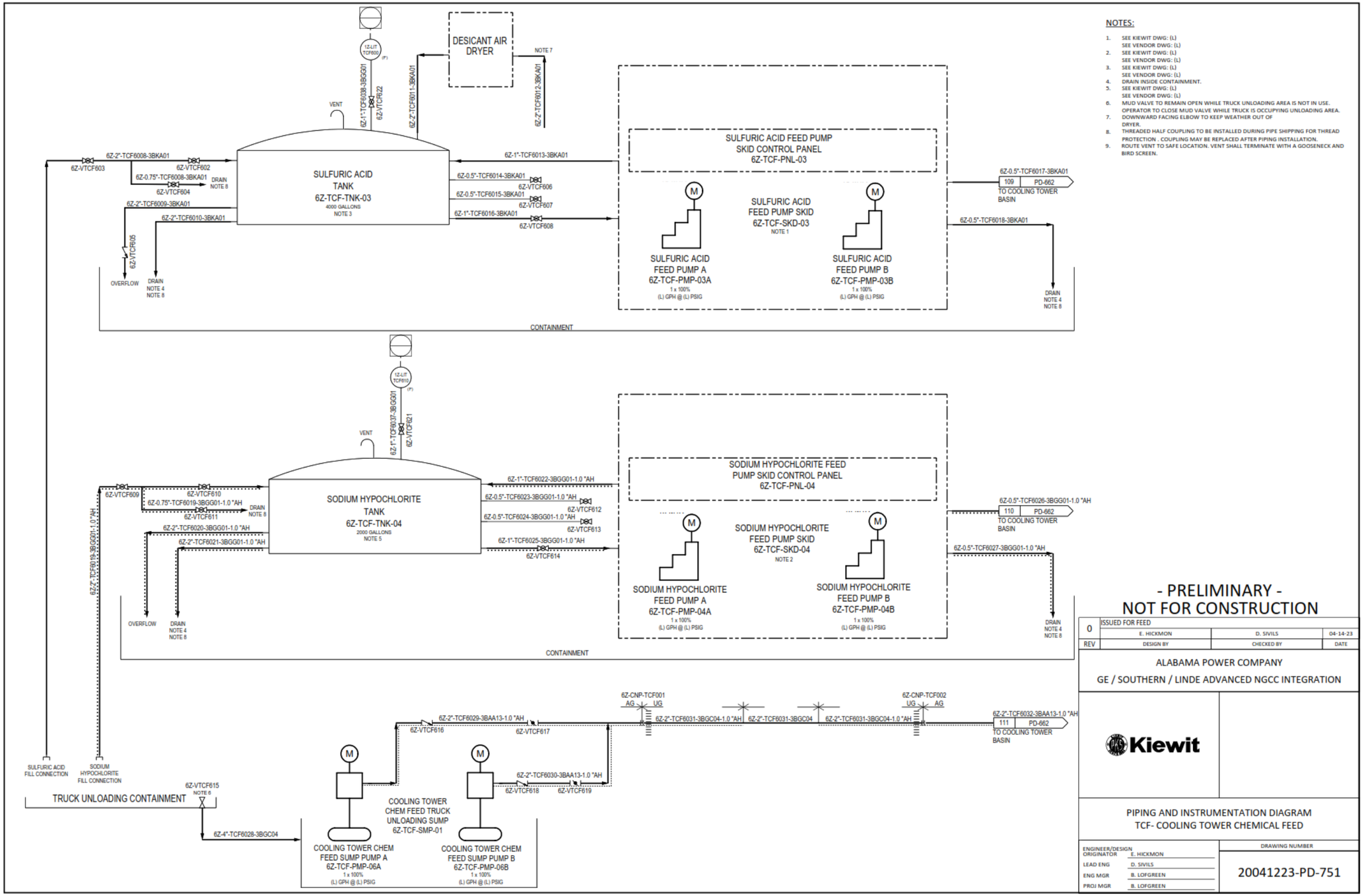
DESICANT AIR DRYER
NOTE 7
VENT
6Z-1"-TCF6038-3BGG01
6Z-VTCF622
6Z-1"-TCF6011-3BKA01
6Z-1"-TCF6012-3BKA01
6Z-2"-TCF6008-3BKA01
6Z-VTCF603
6Z-VTCF602
6Z-0.75"-TCF6008-3BKA01
DRAIN NOTE 8
6Z-VTCF604
6Z-2"-TCF6009-3BKA01
6Z-2"-TCF6010-3BKA01
6Z-VTCF605
OVERFLOW
DRAIN NOTE 4 NOTE 8
SULFURIC ACID TANK
6Z-TCF-TNK-03
4000 GALLONS
NOTE 3
6Z-1"-TCF6013-3BKA01
6Z-0.5"-TCF6014-3BKA01
6Z-VTCF606
6Z-0.5"-TCF6015-3BKA01
6Z-VTCF607
6Z-1"-TCF6016-3BKA01
6Z-VTCF608
SULFURIC ACID FEED PUMP SKID CONTROL PANEL
6Z-TCF-PNL-03
SULFURIC ACID FEED PUMP SKID
6Z-TCF-SKD-03
NOTE 1
SULFURIC ACID FEED PUMP A
6Z-TCF-PMP-03A
1 x 100%
(L) GPH @ (L) PSIG
SULFURIC ACID FEED PUMP B
6Z-TCF-PMP-03B
1 x 100%
(L) GPH @ (L) PSIG
6Z-0.5"-TCF6017-3BKA01
109
PD-662
TO COOLING TOWER BASIN
6Z-0.5"-TCF6018-3BKA01
DRAIN NOTE 4 NOTE 8
CONTAINMENT
6Z-1"-TCF6037-3BGG01
6Z-VTCF621
VENT
6Z-VTCF609
6Z-VTCF610
6Z-0.75"-TCF6019-3BGG01-1.0 "AH
DRAIN NOTE 8
6Z-VTCF611
6Z-2"-TCF6020-3BGG01-1.0 "AH
6Z-2"-TCF6021-3BGG01-1.0 "AH
6Z-2"-TCF6019-3BGG01-1.0 "AH
SODIUM HYPOCHLORITE TANK
6Z-TCF-TNK-04
2000 GALLONS
NOTE 5
6Z-1"-TCF6022-3BGG01-1.0 "AH
6Z-0.5"-TCF6023-3BGG01-1.0 "AH
6Z-VTCF612
6Z-0.5"-TCF6024-3BGG01-1.0 "AH
6Z-VTCF613
6Z-1"-TCF6025-3BGG01-1.0 "AH
6Z-VTCF614
SODIUM HYPOCHLORITE FEED PUMP SKID CONTROL PANEL
6Z-TCF-PNL-04
SODIUM HYPOCHLORITE FEED PUMP SKID
6Z-TCF-SKD-04
NOTE 2
SODIUM HYPOCHLORITE FEED PUMP A
6Z-TCF-PMP-04A
1 x 100%
(L) GPH @ (L) PSIG
SODIUM HYPOCHLORITE FEED PUMP B
6Z-TCF-PMP-04B
1 x 100%
(L) GPH @ (L) PSIG
6Z-0.5"-TCF6026-3BGG01-1.0 "AH
110
PD-662
TO COOLING TOWER BASIN
6Z-0.5"-TCF6027-3BGG01-1.0 "AH
DRAIN NOTE 4 NOTE 8
CONTAINMENT
SULFURIC ACID FILL CONNECTION
SODIUM HYPOCHLORITE FILL CONNECTION
TRUCK UNLOADING CONTAINMENT
6Z-VTCF615
NOTE 6
6Z-4"-TCF6028-3BGC04
6Z-2"-TCF6029-3BAA13-1.0 "AH
6Z-VTCF616
6Z-VTCF617
6Z-2"-TCF6030-3BAA13-1.0 "AH
6Z-VTCF618
6Z-VTCF619
COOLING TOWER CHEM FEED TRUCK UNLOADING SUMP
6Z-TCF-SMP-01
COOLING TOWER CHEM FEED SUMP PUMP A
6Z-TCF-PMP-06A
1 x 100%
(L) GPH @ (L) PSIG
COOLING TOWER CHEM FEED SUMP PUMP B
6Z-TCF-PMP-06B
1 x 100%
(L) GPH @ (L) PSIG
6Z-CNP-TCF001
AG UG
6Z-2"-TCF6031-3BGC04-1.0 "AH
6Z-2"-TCF6031-3BGC04
6Z-2"-TCF6031-3BGC04-1.0 "AH
6Z-CNP-TCF002
UG AG
6Z-2"-TCF6032-3BAA13-1.0 "AH
111
PD-662
TO COOLING TOWER BASIN
NOTES:
1. SEE KIEWIT DWG: (L)
SEE VENDOR DWG: (L)
2. SEE KIEWIT DWG: (L)
SEE VENDOR DWG: (L)
3. SEE KIEWIT DWG: (L)
SEE VENDOR DWG: (L)
4. DRAIN INSIDE CONTAINMENT.
5. SEE KIEWIT DWG: (L)
SEE VENDOR DWG: (L)
6. MUD VALVE TO REMAIN OPEN WHILE TRUCK UNLOADING AREA IS NOT IN USE. OPERATOR TO CLOSE MUD VALVE WHILE TRUCK IS OCCUPYING UNLOADING AREA.
7. DOWNWARD FACING ELBOW TO KEEP WEATHER OUT OF DRYER.
8. THREADED HALF COUPLING TO BE INSTALLED DURING PIPE SHIPPING FOR THREAD PROTECTION . COUPLING MAY BE REPLACED AFTER PIPING INSTALLATION.
9. ROUTE VENT TO SAFE LOCATION. VENT SHALL TERMINATE WITH A GOOSENECK AND BIRD SCREEN.
- PRELIMINARY -
NOT FOR CONSTRUCTION
0 ISSUED FOR FEED
E. HICKMON D. SIVILS 04-14-23
REV DESIGN BY CHECKED BY DATE
ALABAMA POWER COMPANY
GE / SOUTHERN / LINDE ADVANCED NGCC INTEGRATION
Kiewit
PIPING AND INSTRUMENTATION DIAGRAM
TCF- COOLING TOWER CHEMICAL FEED
ENGINEER/DESIGN ORIGINATOR E. HICKMON
LEAD ENG D. SIVILS
ENG MGR B. LOFGREEN
PROJ MGR B. LOFGREEN
DRAWING NUMBER
20041223-PD-751

NOTES:

1. SEE KIEWIT DWG: (L)
   SEE VENDOR DWG: (L)
2. SEE KIEWIT DWG: (L)
   SEE VENDOR DWG: (L)
3. SLOPE 1/8" PER FOOT.
4. THREADED HALF COUPLING TO BE INSTALLED DURING PIPE SHIPPING FOR THREAD PROTECTION. COUPLING MAY BE REPLACED AFTER PIPE INSTALLATION.

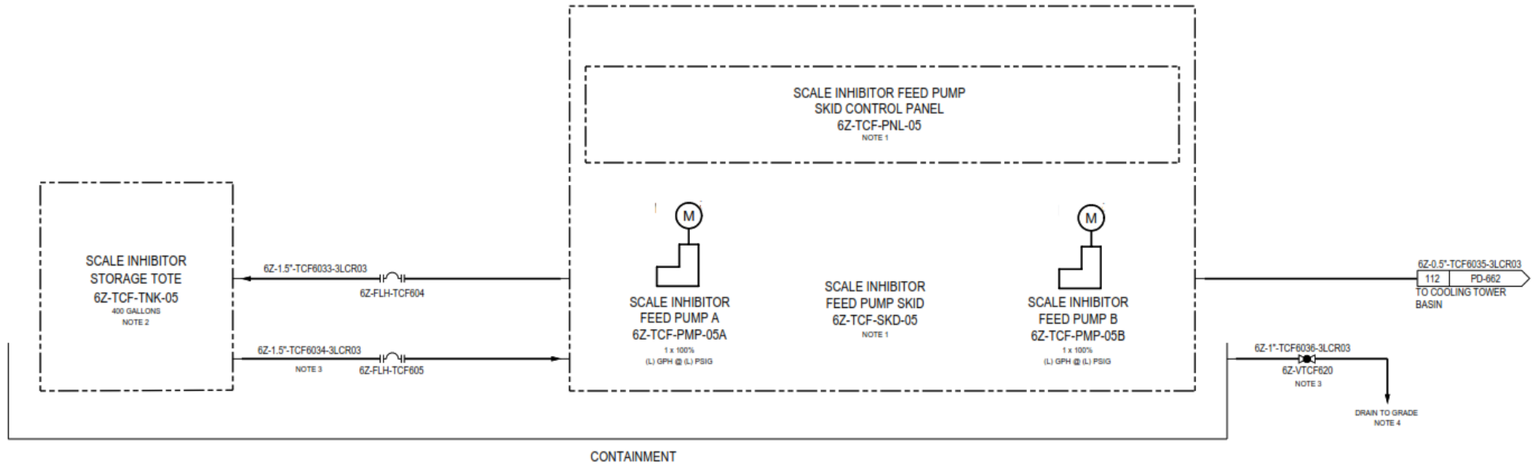

- PRELIMINARY -
NOT FOR CONSTRUCTION

REV	DESIGN BY	CHECKED BY	DATE
0	E. HICKMON	D. SIVILS	04-14-23
	ISSUED FOR FEED		

ALABAMA POWER COMPANY

GE / SOUTHERN / LINDE ADVANCED NGCC INTEGRATION

Kiewit

PIPING AND INSTRUMENTATION DIAGRAM
TCF- COOLING TOWER CHEMICAL FEED

ENGINEER/DESIGN ORIGINATOR	E. HICKMON
LEAD ENG	D. SIVILS
ENG MGR	B. LOFGREEN
PROJ MGR	B. LOFGREEN

DRAWING NUMBER

20041223-PD-752

NOTES:

1. INSULATE AND/OR HEAT TRACE PER STANDARD MECHANICAL DETAILS.
2. SEE KIEWIT DWG: (L)
   SEE VENDOR DWG: (L)

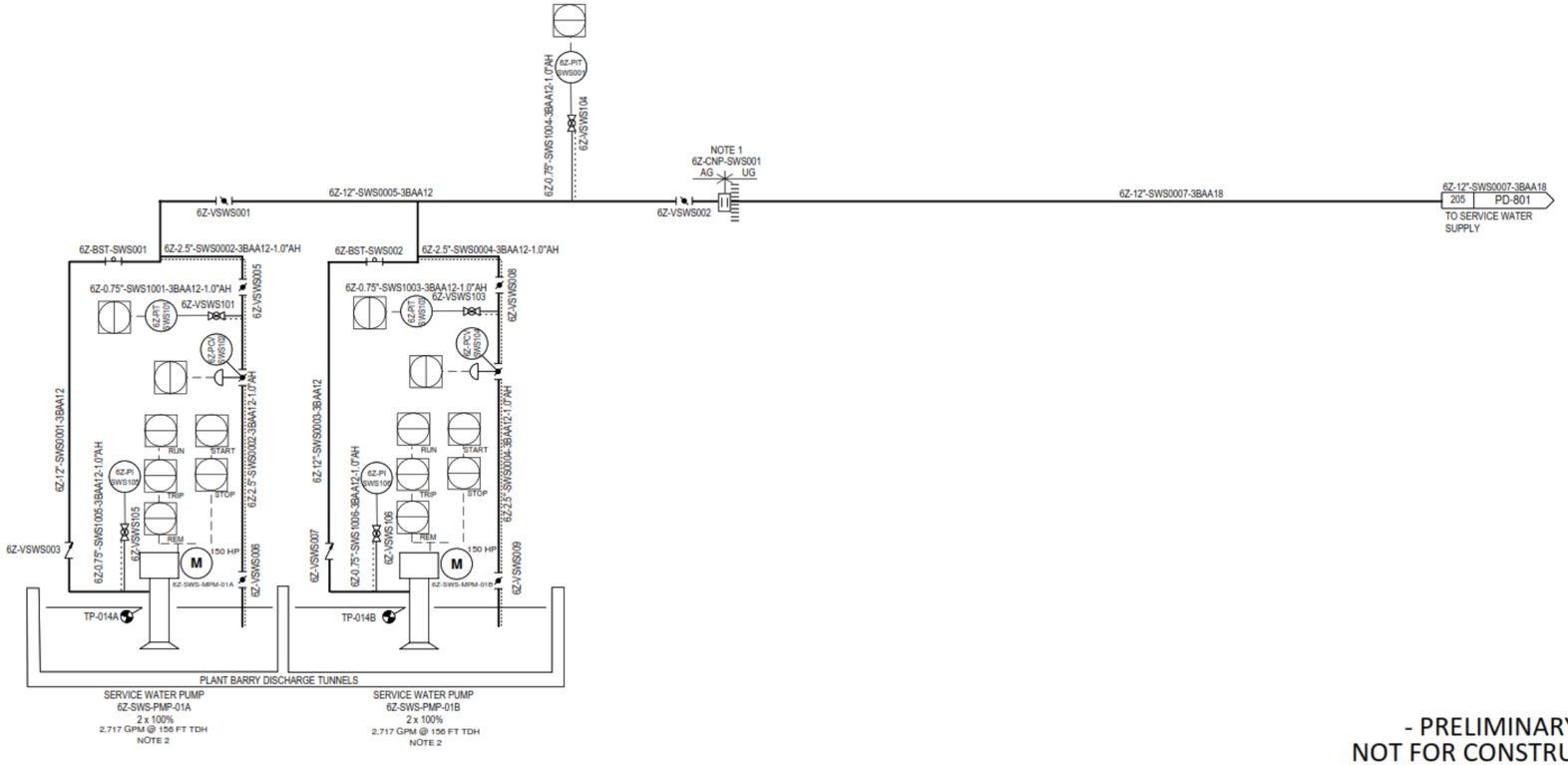

- PRELIMINARY -
NOT FOR CONSTRUCTION

REV	DESIGN BY	CHECKED BY	DATE
0	ISSUED FOR FEED C. HINTON	D. SIVILS	04-14-23

ALABAMA POWER COMPANY
GE / SOUTHERN / LINDE ADVANCED NGCC INTEGRATION

Kiewit

PIPING AND INSTRUMENTATION DIAGRAM
SWS- SERVICE WATER

ENGINEER/DESIGN ORIGINATOR	C. HINTON
LEAD ENG	D. SIVILS
ENG MGR	B. LOFGREEN
PROJ MGR	B. LOFGREEN

DRAWING NUMBER
20041223-PD-800

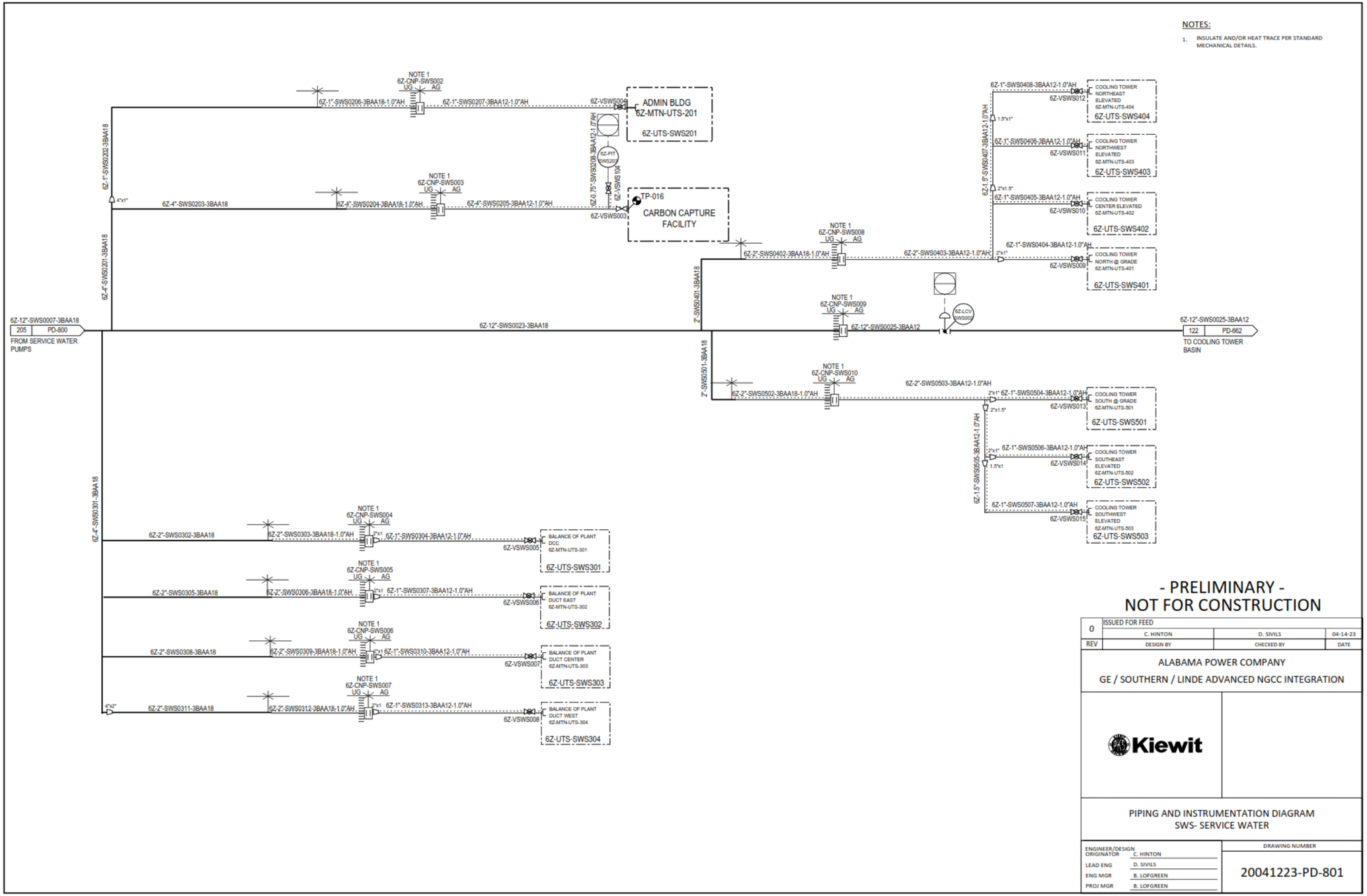
NOTES:
1. INSULATE AND/OR HEAT TRACE PER STANDARD MECHANICAL DETAILS.
6Z-12"-SWS0007-3BAA18
205 PD-800
FROM SERVICE WATER PUMPS
6Z-12"-SWS0023-3BAA18
6Z-12"-SWS0025-3BAA12
122 PD-662
TO COOLING TOWER BASIN
6Z-1"-SWS0202-3BAA18
6Z-4"-SWS0201-3BAA18
6Z-4"-SWS0301-3BAA18
6Z-4"-SWS0203-3BAA18
6Z-1"-SWS0206-3BAA18-1.0"AH
6Z-1"-SWS0207-3BAA12-1.0"AH
6Z-VSWS004
ADMIN BLDG
6Z-MTN-UTS-201
6Z-UTS-SWS201
6Z-0.75"-SWS0208-3BAA12-1.0"AH
6Z-PIT-SWS207
6Z-VSWS104
6Z-4"-SWS0204-3BAA18-1.0"AH
6Z-4"-SWS0205-3BAA12-1.0"AH
6Z-VSWS003
TP-016
CARBON CAPTURE FACILITY
6Z-2"-SWS0402-3BAA18-1.0"AH
6Z-2"-SWS0403-3BAA12-1.0"AH
6Z-2"-SWS0401-3BAA18
6Z-2"-SWS0501-3BAA18
6Z-LCV-SWS002
6Z-1"-SWS0408-3BAA12-1.0"AH
6Z-VSWS012
COOLING TOWER NORTHEAST ELEVATED 6Z-MTN-UTS-404
6Z-UTS-SWS404
6Z-1"-SWS0406-3BAA12-1.0"AH
6Z-VSWS011
COOLING TOWER NORTHWEST ELEVATED 6Z-MTN-UTS-403
6Z-UTS-SWS403
6Z-1.5"-SWS0407-3BAA12-1.0"AH
6Z-1"-SWS0405-3BAA12-1.0"AH
6Z-VSWS010
COOLING TOWER CENTER ELEVATED 6Z-MTN-UTS-402
6Z-UTS-SWS402
6Z-1"-SWS0404-3BAA12-1.0"AH
6Z-VSWS009
COOLING TOWER NORTH @ GRADE 6Z-MTN-UTS-401
6Z-UTS-SWS401
6Z-2"-SWS0502-3BAA18-1.0"AH
6Z-2"-SWS0503-3BAA12-1.0"AH
6Z-1"-SWS0504-3BAA12-1.0"AH
6Z-VSWS013
COOLING TOWER SOUTH @ GRADE 6Z-MTN-UTS-501
6Z-UTS-SWS501
6Z-1.5"-SWS0505-3BAA12-1.0"AH
6Z-1"-SWS0506-3BAA12-1.0"AH
6Z-VSWS014
COOLING TOWER SOUTHEAST ELEVATED 6Z-MTN-UTS-502
6Z-UTS-SWS502
6Z-1"-SWS0507-3BAA12-1.0"AH
6Z-VSWS015
COOLING TOWER SOUTHWEST ELEVATED 6Z-MTN-UTS-503
6Z-UTS-SWS503
6Z-2"-SWS0302-3BAA18
6Z-2"-SWS0303-3BAA18-1.0"AH
6Z-1"-SWS0304-3BAA12-1.0"AH
6Z-VSWS005
BALANCE OF PLANT DCC 6Z-MTN-UTS-301
6Z-UTS-SWS301
6Z-2"-SWS0305-3BAA18
6Z-2"-SWS0306-3BAA18-1.0"AH
6Z-1"-SWS0307-3BAA12-1.0"AH
6Z-VSWS006
BALANCE OF PLANT DUCT EAST 6Z-MTN-UTS-302
6Z-UTS-SWS302
6Z-2"-SWS0308-3BAA18
6Z-2"-SWS0309-3BAA18-1.0"AH
6Z-1"-SWS0310-3BAA12-1.0"AH
6Z-VSWS007
BALANCE OF PLANT DUCT CENTER 6Z-MTN-UTS-303
6Z-UTS-SWS303
6Z-2"-SWS0311-3BAA18
6Z-2"-SWS0312-3BAA18-1.0"AH
6Z-1"-SWS0313-3BAA12-1.0"AH
6Z-VSWS008
BALANCE OF PLANT DUCT WEST 6Z-MTN-UTS-304
6Z-UTS-SWS304
NOTE 1
6Z-CNP-SWS002 UG AG
6Z-CNP-SWS003 UG AG
6Z-CNP-SWS008 UG AG
6Z-CNP-SWS009 UG AG
6Z-CNP-SWS010 UG AG
6Z-CNP-SWS004 UG AG
6Z-CNP-SWS005 UG AG
6Z-CNP-SWS006 UG AG
6Z-CNP-SWS007 UG AG
- PRELIMINARY -
NOT FOR CONSTRUCTION
0 ISSUED FOR FEED C. HINTON D. SIVILS 04-14-23
REV DESIGN BY CHECKED BY DATE
ALABAMA POWER COMPANY
GE / SOUTHERN / LINDE ADVANCED NGCC INTEGRATION
Kiewit
PIPING AND INSTRUMENTATION DIAGRAM
SWS- SERVICE WATER
ENGINEER/DESIGN ORIGINATOR C. HINTON
LEAD ENG D. SIVILS
ENG MGR B. LOFGREEN
PROJ MGR B. LOFGREEN
DRAWING NUMBER
20041223-PD-801

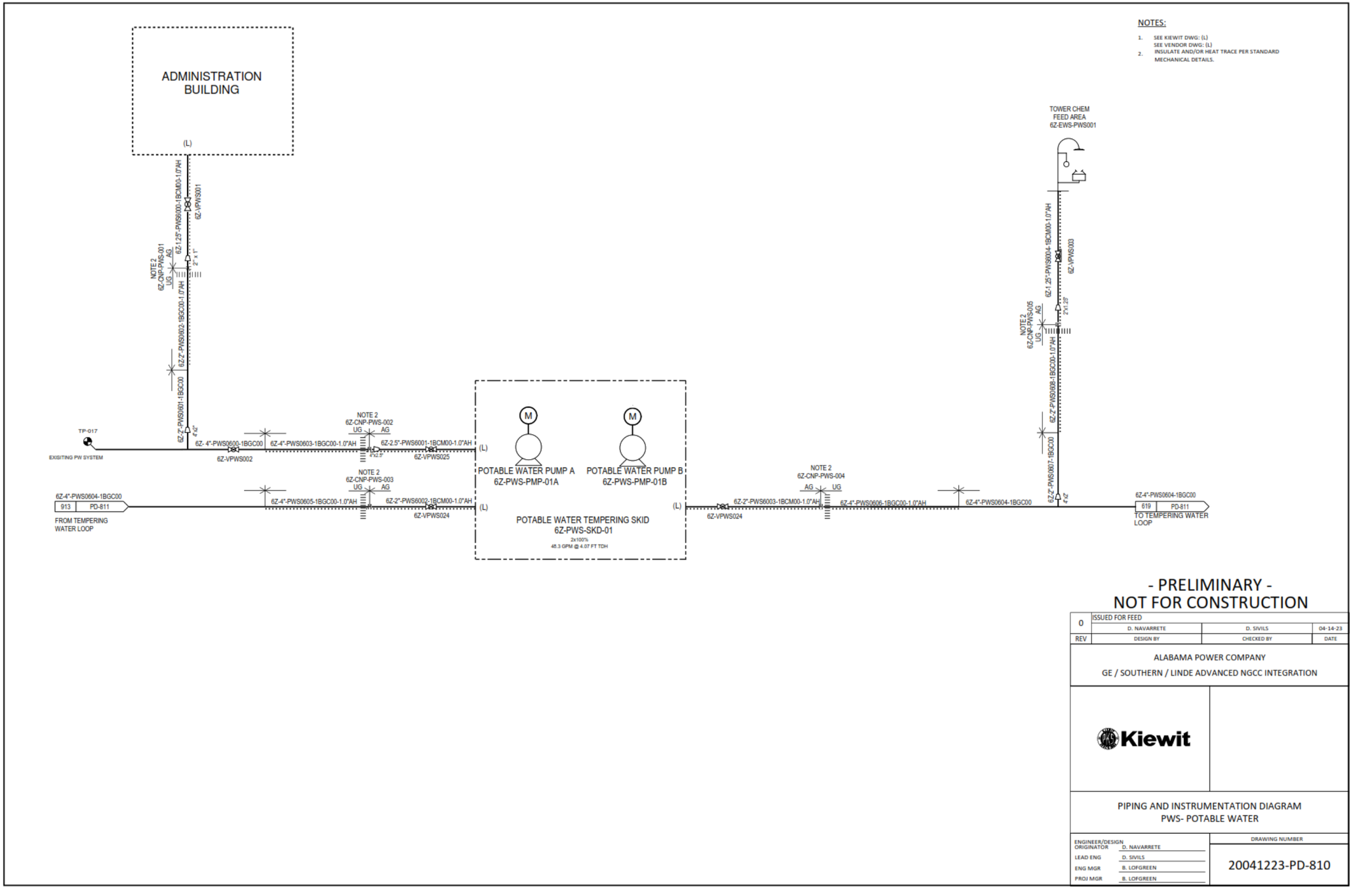
ADMINISTRATION BUILDING
(L)
6Z-VPWS001
6Z-1.25"-PWS6000-1BCM00-1.0"AH
NOTE 2
6Z-CNP-PWS-001
UG
AG
2" x 1"
6Z-2"-PWS6002-1BGC00-1.0"AH
6Z-3"-PWS6001-1BGC00
4"x2"
TP-017
EXISITING PW SYSTEM
6Z- 4"-PWS0600-1BGC00
6Z-VPWS002
6Z-4"-PWS0603-1BGC00-1.0"AH
NOTE 2
6Z-CNP-PWS-002
UG
AG
4"x2.5"
6Z-2.5"-PWS6001-1BCM00-1.0"AH
6Z-VPWS025
(L)
POTABLE WATER PUMP A
6Z-PWS-PMP-01A
POTABLE WATER PUMP B
6Z-PWS-PMP-01B
NOTE 2
6Z-CNP-PWS-003
UG
AG
6Z-4"-PWS0604-1BGC00
913
PD-811
FROM TEMPERING WATER LOOP
6Z-4"-PWS0605-1BGC00-1.0"AH
6Z-2"-PWS6002-1BCM00-1.0"AH
6Z-VPWS024
(L)
POTABLE WATER TEMPERING SKID
6Z-PWS-SKD-01
2x100%
46.3 GPM @ 4.07 FT TDH
NOTE 2
6Z-CNP-PWS-004
AG
UG
6Z-2"-PWS6003-1BCM00-1.0"AH
6Z-VPWS024
6Z-4"-PWS0606-1BGC00
6Z-4"-PWS0604-1BGC00
TOWER CHEM FEED AREA
6Z-EWS-PWS001
6Z-VPWS033
6Z-1.25"-PWS6004-1BCM00-1.0"AH
NOTE 2
6Z-CNP-PWS-005
AG
UG
2"x1.25"
6Z-3"-PWS0608-1BGC00-1.0"AH
6Z-3"-PWS0607-1BGC00
4"x2"
6Z-4"-PWS0604-1BGC00
619
PD-811
TO TEMPERING WATER LOOP
NOTES:
1. SEE KIEWIT DWG: (L)
SEE VENDOR DWG: (L)
2. INSULATE AND/OR HEAT TRACE PER STANDARD MECHANICAL DETAILS.
- PRELIMINARY -
NOT FOR CONSTRUCTION
0
ISSUED FOR FEED
D. NAVARRETE
D. SIVILS
04-14-23
REV
DESIGN BY
CHECKED BY
DATE
ALABAMA POWER COMPANY
GE / SOUTHERN / LINDE ADVANCED NGCC INTEGRATION
Kiewit
PIPING AND INSTRUMENTATION DIAGRAM
PWS- POTABLE WATER
ENGINEER/DESIGN ORIGINATOR
D. NAVARRETE
LEAD ENG
D. SIVILS
ENG MGR
B. LOFGREEN
PROJ MGR
B. LOFGREEN
DRAWING NUMBER
20041223-PD-810

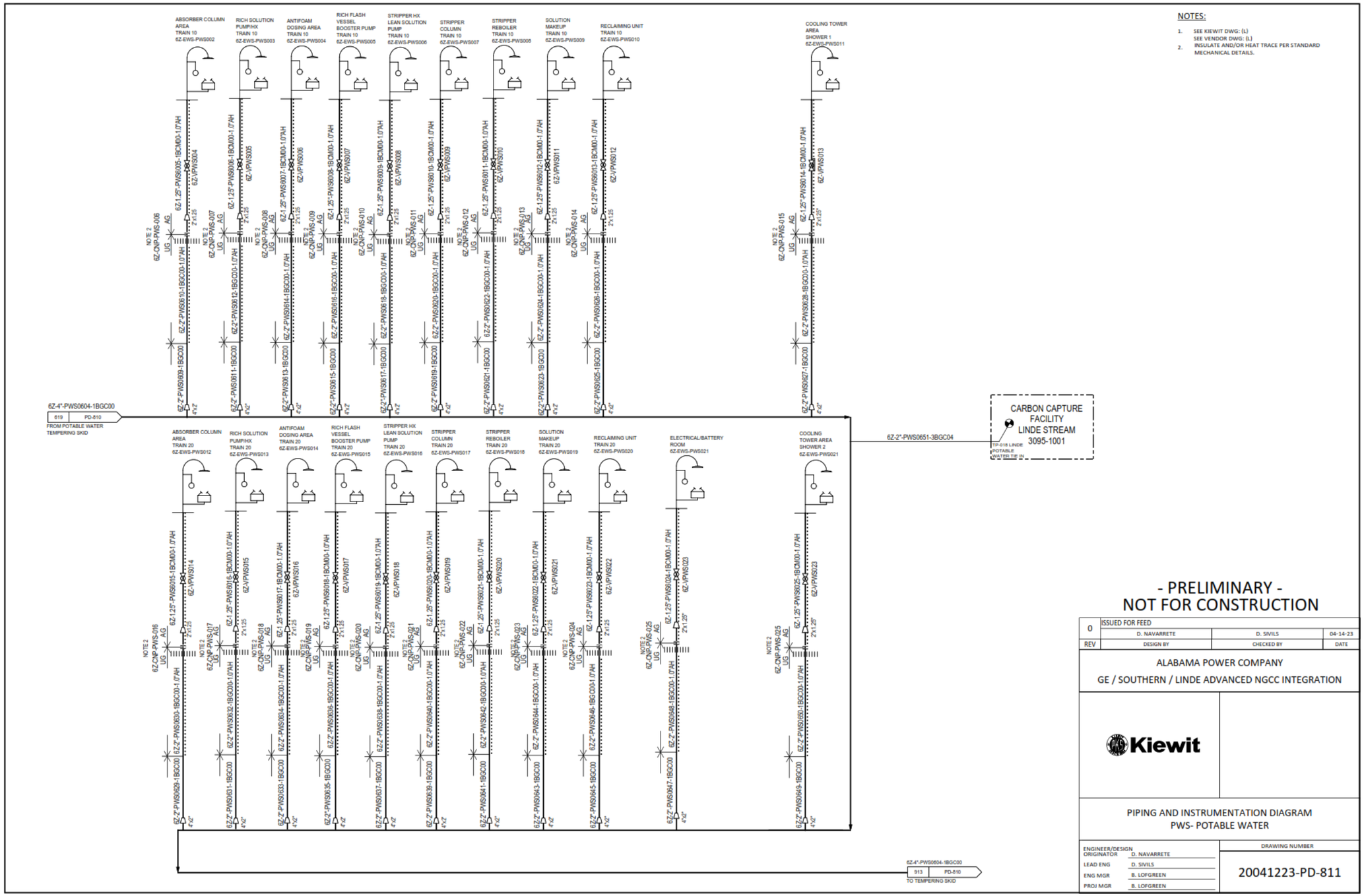
NOTES:
1. SEE KIEWIT DWG: (L)
SEE VENDOR DWG: (L)
2. INSULATE AND/OR HEAT TRACE PER STANDARD MECHANICAL DETAILS.
6Z-4"-PWS0604-1BGC00
619 PD-810
FROM POTABLE WATER TEMPERING SKID
ABSORBER COLUMN AREA TRAIN 10 6Z-EWS-PWS002
RICH SOLUTION PUMP/HX TRAIN 10 6Z-EWS-PWS003
ANTIFOAM DOSING AREA TRAIN 10 6Z-EWS-PWS004
RICH FLASH VESSEL BOOSTER PUMP TRAIN 10 6Z-EWS-PWS005
STRIPPER HX LEAN SOLUTION PUMP TRAIN 10 6Z-EWS-PWS006
STRIPPER COLUMN TRAIN 10 6Z-EWS-PWS007
STRIPPER REBOILER TRAIN 10 6Z-EWS-PWS008
SOLUTION MAKEUP TRAIN 10 6Z-EWS-PWS009
RECLAIMING UNIT TRAIN 10 6Z-EWS-PWS010
COOLING TOWER AREA SHOWER 1 6Z-EWS-PWS011
ABSORBER COLUMN AREA TRAIN 20 6Z-EWS-PWS012
RICH SOLUTION PUMP/HX TRAIN 20 6Z-EWS-PWS013
ANTIFOAM DOSING AREA TRAIN 20 6Z-EWS-PWS014
RICH FLASH VESSEL BOOSTER PUMP TRAIN 20 6Z-EWS-PWS015
STRIPPER HX LEAN SOLUTION PUMP TRAIN 20 6Z-EWS-PWS016
STRIPPER COLUMN TRAIN 20 6Z-EWS-PWS017
STRIPPER REBOILER TRAIN 20 6Z-EWS-PWS018
SOLUTION MAKEUP TRAIN 20 6Z-EWS-PWS019
RECLAIMING UNIT TRAIN 20 6Z-EWS-PWS020
ELECTRICAL/BATTERY ROOM 6Z-EWS-PWS021
COOLING TOWER AREA SHOWER 2 6Z-EWS-PWS021
6Z-2"-PWS0651-3BGC04
CARBON CAPTURE FACILITY LINDE STREAM 3095-1001
TP-018 LINDE POTABLE WATER TIE IN
6Z-4"-PWS0604-1BGC00
913 PD-810
TO TEMPERING SKID
- PRELIMINARY -
NOT FOR CONSTRUCTION
0 ISSUED FOR FEED
D. NAVARRETE D. SIVILS 04-14-23
REV DESIGN BY CHECKED BY DATE
ALABAMA POWER COMPANY
GE / SOUTHERN / LINDE ADVANCED NGCC INTEGRATION
Kiewit
PIPING AND INSTRUMENTATION DIAGRAM
PWS- POTABLE WATER
ENGINEER/DESIGN ORIGINATOR D. NAVARRETE
LEAD ENG D. SIVILS
ENG MGR B. LOFGREEN
PROJ MGR B. LOFGREEN
DRAWING NUMBER
20041223-PD-811

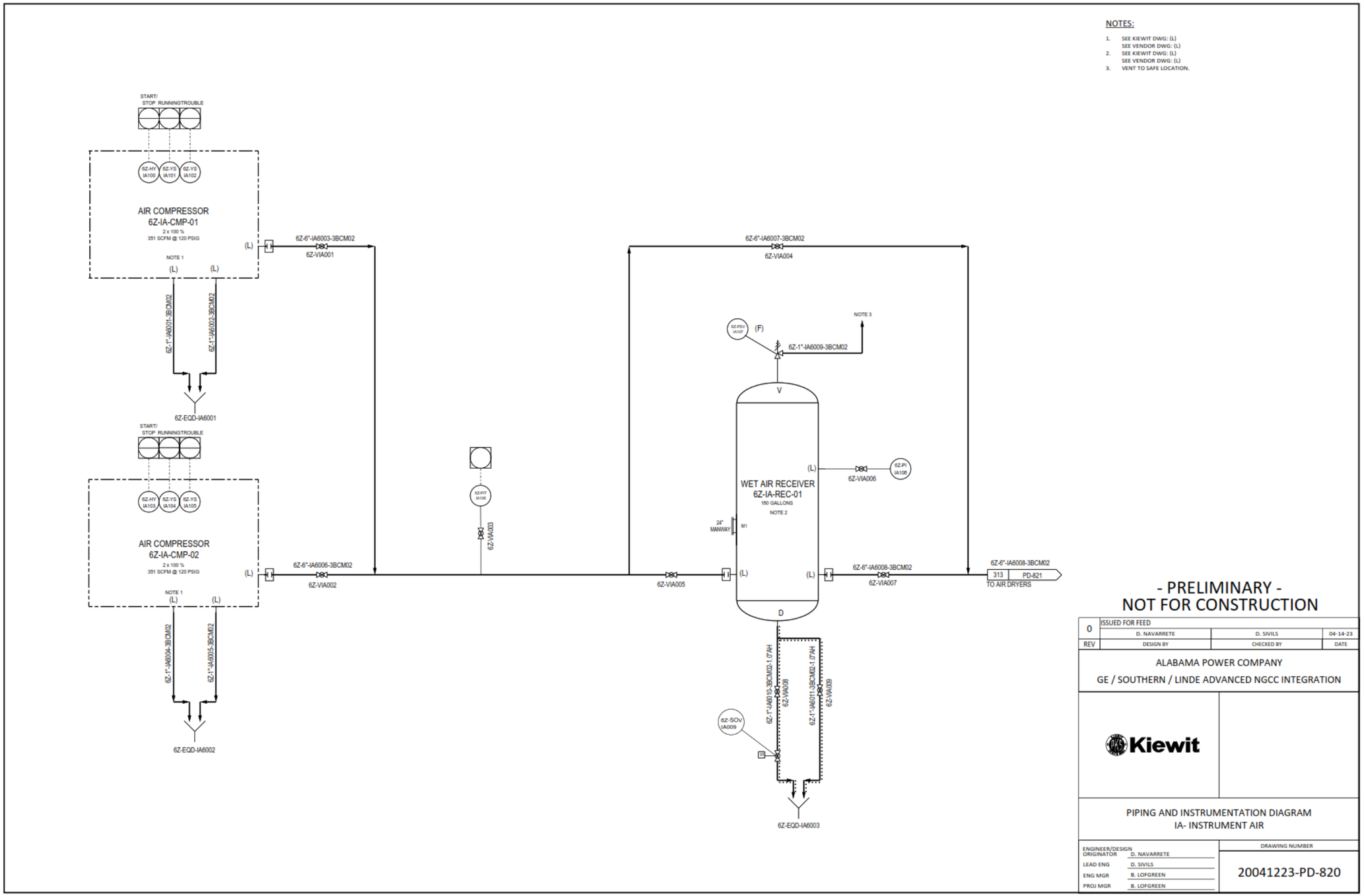
NOTES:
1. SEE KIEWIT DWG: (L)
SEE VENDOR DWG: (L)
2. SEE KIEWIT DWG: (L)
SEE VENDOR DWG: (L)
3. VENT TO SAFE LOCATION.
START/ STOP RUNNING TROUBLE
6Z-HY IA100
6Z-YS IA101
6Z-YS IA102
AIR COMPRESSOR
6Z-IA-CMP-01
2 x 100 %
351 SCFM @ 120 PSIG
NOTE 1
(L)
(L)
6Z-6"-IA6003-3BCM02
6Z-VIA001
6Z-1"-IA6001-3BCM02
6Z-1"-IA6002-3BCM02
6Z-EQD-IA6001
START/ STOP RUNNING TROUBLE
6Z-HY IA103
6Z-YS IA104
6Z-YS IA105
AIR COMPRESSOR
6Z-IA-CMP-02
2 x 100 %
351 SCFM @ 120 PSIG
NOTE 1
6Z-1"-IA6004-3BCM02
6Z-1"-IA6005-3BCM02
6Z-EQD-IA6002
6Z-6"-IA6006-3BCM02
6Z-VIA002
6Z-PIT IA106
6Z-VIA003
6Z-6"-IA6007-3BCM02
6Z-VIA004
6Z-VIA005
NOTE 3
6Z-PSV IA107
(F)
6Z-1"-IA6009-3BCM02
V
WET AIR RECEIVER
6Z-IA-REC-01
150 GALLONS
NOTE 2
24" MANWAY
M1
(L)
6Z-VIA006
6Z-PI IA108
(L)
(L)
6Z-6"-IA6008-3BCM02
6Z-VIA007
6Z-6"-IA6008-3BCM02
313
PD-821
TO AIR DRYERS
D
6Z-1"-IA6010-3BCM02-1.0"AH
6Z-VIA008
6Z-1"-IA6011-3BCM02-1.0"AH
6Z-VIA009
6Z-SOV IA009
6Z-EQD-IA6003
- PRELIMINARY -
NOT FOR CONSTRUCTION
0
ISSUED FOR FEED
D. NAVARRETE
D. SIVILS
04-14-23
REV
DESIGN BY
CHECKED BY
DATE
ALABAMA POWER COMPANY
GE / SOUTHERN / LINDE ADVANCED NGCC INTEGRATION
Kiewit
PIPING AND INSTRUMENTATION DIAGRAM
IA- INSTRUMENT AIR
ENGINEER/DESIGN ORIGINATOR D. NAVARRETE
LEAD ENG D. SIVILS
ENG MGR B. LOFGREEN
PROJ MGR B. LOFGREEN
DRAWING NUMBER
20041223-PD-820

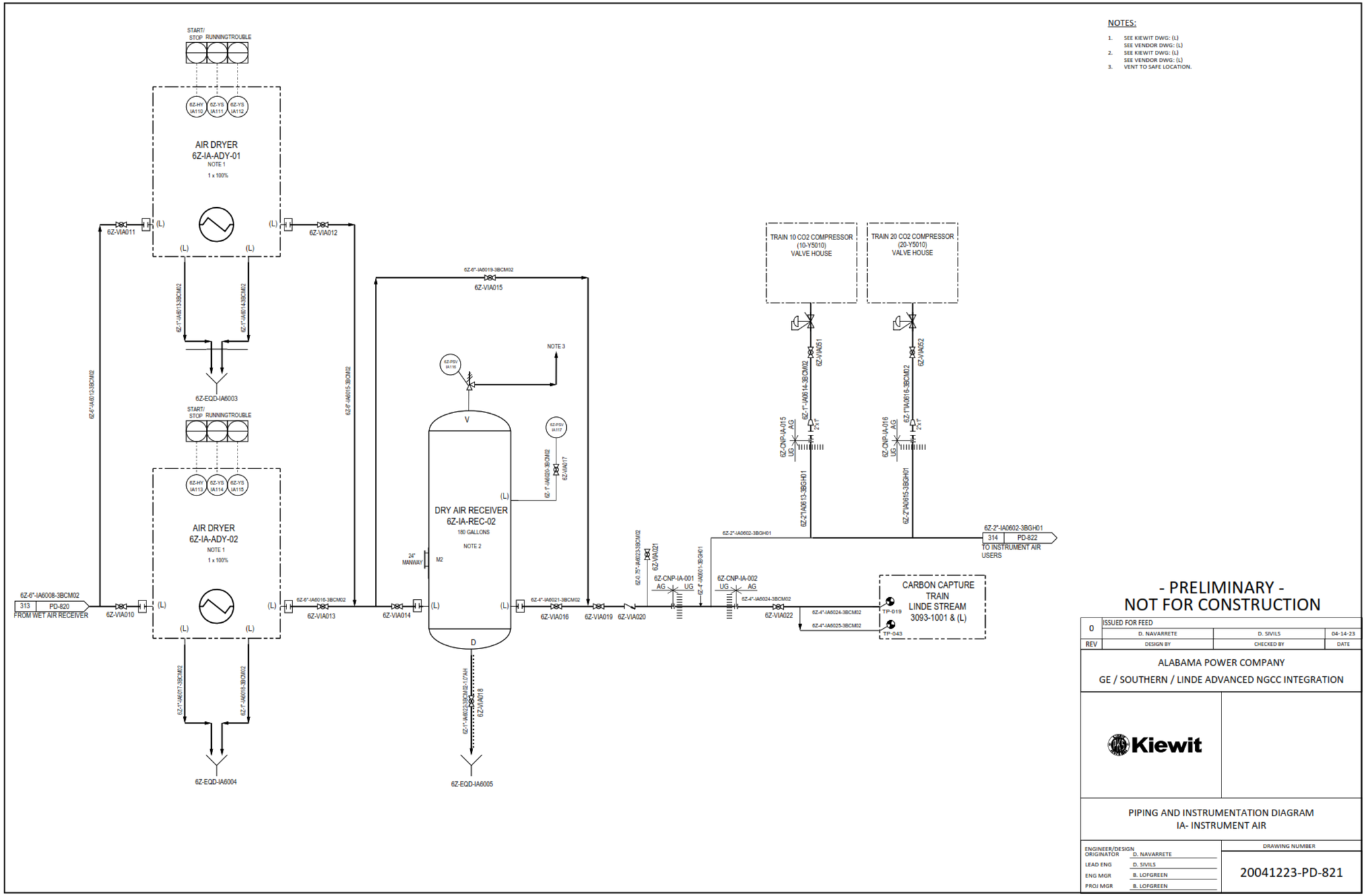
START/ STOP RUNNING TROUBLE
6Z-HY IA110
6Z-YS IA111
6Z-YS IA112
AIR DRYER
6Z-IA-ADY-01
NOTE 1
1 x 100%
6Z-VIA011
6Z-VIA012
6Z-4"-IA6013-3BCM02
6Z-4"-IA6014-3BCM02
6Z-EQD-IA6003
6Z-4"-IA6012-3BCM02
6Z-4"-IA6015-3BCM02
6Z-6"-IA6019-3BCM02
6Z-VIA015
NOTE 3
6Z-PSV IA116
V
DRY AIR RECEIVER
6Z-IA-REC-02
180 GALLONS
NOTE 2
24" MANWAY
M2
D
6Z-7"-IA6020-3BCM02
6Z-VIA017
6Z-HY IA113
6Z-YS IA114
6Z-YS IA115
AIR DRYER
6Z-IA-ADY-02
NOTE 1
1 x 100%
6Z-6"-IA6008-3BCM02
313 PD-820
FROM WET AIR RECEIVER
6Z-VIA010
6Z-6"-IA6016-3BCM02
6Z-VIA013
6Z-VIA014
6Z-1"-IA6017-3BCM02
6Z-1"-IA6018-3BCM02
6Z-EQD-IA6004
6Z-1"-IA6023-3BCM02-137AH
6Z-VIA018
6Z-EQD-IA6005
6Z-4"-IA6021-3BCM02
6Z-VIA016
6Z-VIA019
6Z-VIA020
6Z-7"-IA6033-3BCM02
6Z-VIA021
6Z-4"-IA6051-3BGH01
6Z-CNP-IA-001
AG
UG
6Z-CNP-IA-002
UG
AG
6Z-4"-IA6024-3BCM02
6Z-VIA022
6Z-4"-IA6024-3BCM02
6Z-4"-IA6025-3BCM02
TRAIN 10 CO2 COMPRESSOR
(10-Y5010)
VALVE HOUSE
TRAIN 20 CO2 COMPRESSOR
(20-Y5010)
VALVE HOUSE
6Z-VIA051
6Z-VIA052
6Z-1"-IA0614-3BCM02
6Z-1"-IA0616-3BCM02
6Z-CNP-IA-015
6Z-CNP-IA-016
6Z-2"-IA0613-3BGH01
6Z-2"-IA0615-3BGH01
6Z-2"-IA0602-3BGH01
6Z-2"-IA0602-3BGH01
314 PD-822
TO INSTRUMENT AIR USERS
CARBON CAPTURE
TRAIN
LINDE STREAM
3093-1001 & (L)
TP-019
TP-043
NOTES:
1. SEE KIEWIT DWG: (L)
SEE VENDOR DWG: (L)
2. SEE KIEWIT DWG: (L)
SEE VENDOR DWG: (L)
3. VENT TO SAFE LOCATION.
- PRELIMINARY -
NOT FOR CONSTRUCTION
0 ISSUED FOR FEED
D. NAVARRETE D. SIVILS 04-14-23
REV DESIGN BY CHECKED BY DATE
ALABAMA POWER COMPANY
GE / SOUTHERN / LINDE ADVANCED NGCC INTEGRATION
Kiewit
PIPING AND INSTRUMENTATION DIAGRAM
IA- INSTRUMENT AIR
ENGINEER/DESIGN ORIGINATOR D. NAVARRETE
LEAD ENG D. SIVILS
ENG MGR B. LOFGREEN
PROJ MGR B. LOFGREEN
DRAWING NUMBER
20041223-PD-821

NOTES:

1. NOT USED

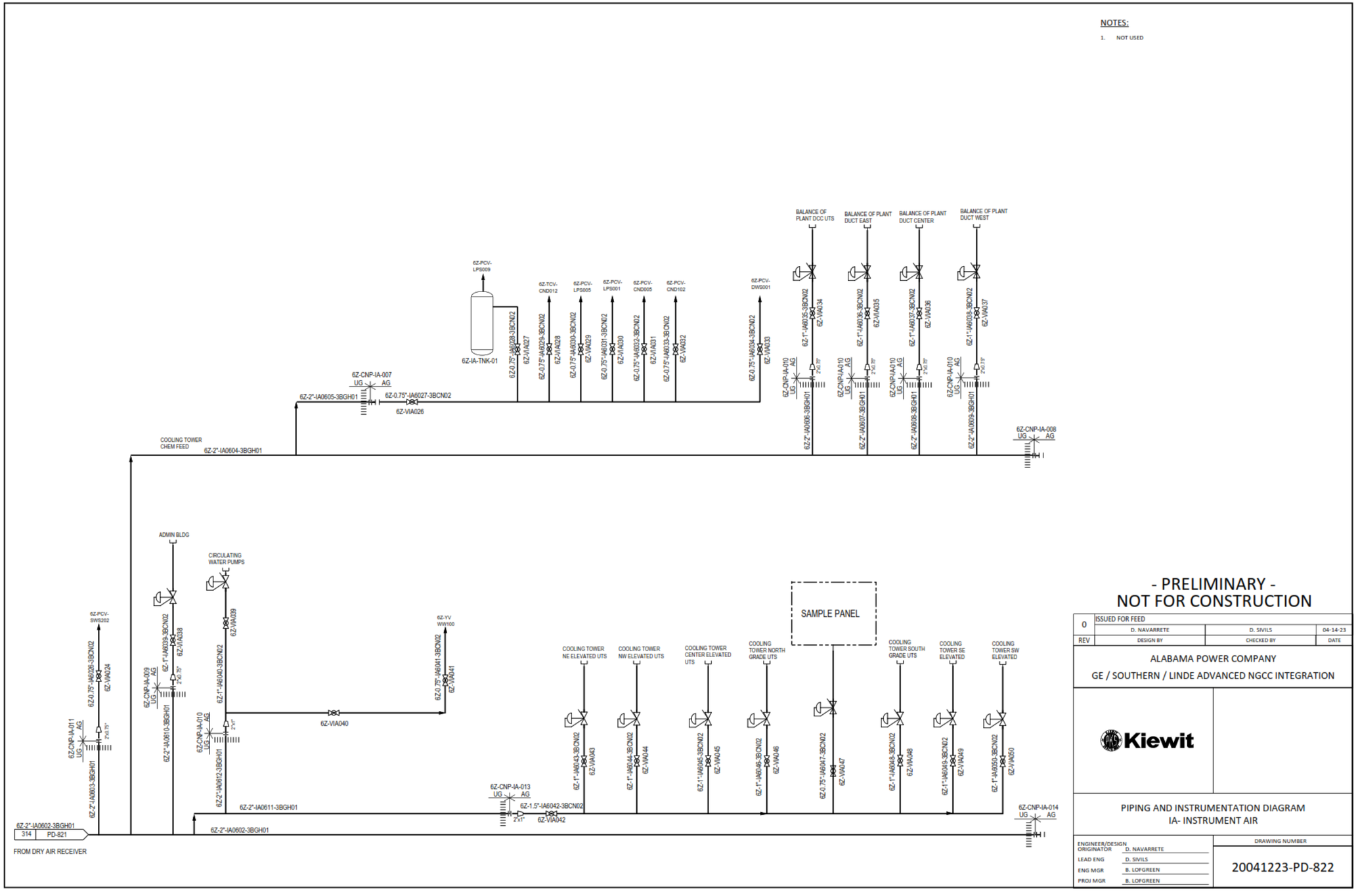

- PRELIMINARY -
NOT FOR CONSTRUCTION

REV	DESIGN BY	CHECKED BY	DATE
0	D. NAVARRETE	D. SIVILS	04-14-23

ISSUED FOR FEED

ALABAMA POWER COMPANY

GE / SOUTHERN / LINDE ADVANCED NGCC INTEGRATION

Kiewit

PIPING AND INSTRUMENTATION DIAGRAM
IA- INSTRUMENT AIR

ENGINEER/DESIGN ORIGINATOR	D. NAVARRETE
LEAD ENG	D. SIVILS
ENG MGR	B. LOFGREEN
PROJ MGR	B. LOFGREEN

DRAWING NUMBER

20041223-PD-822

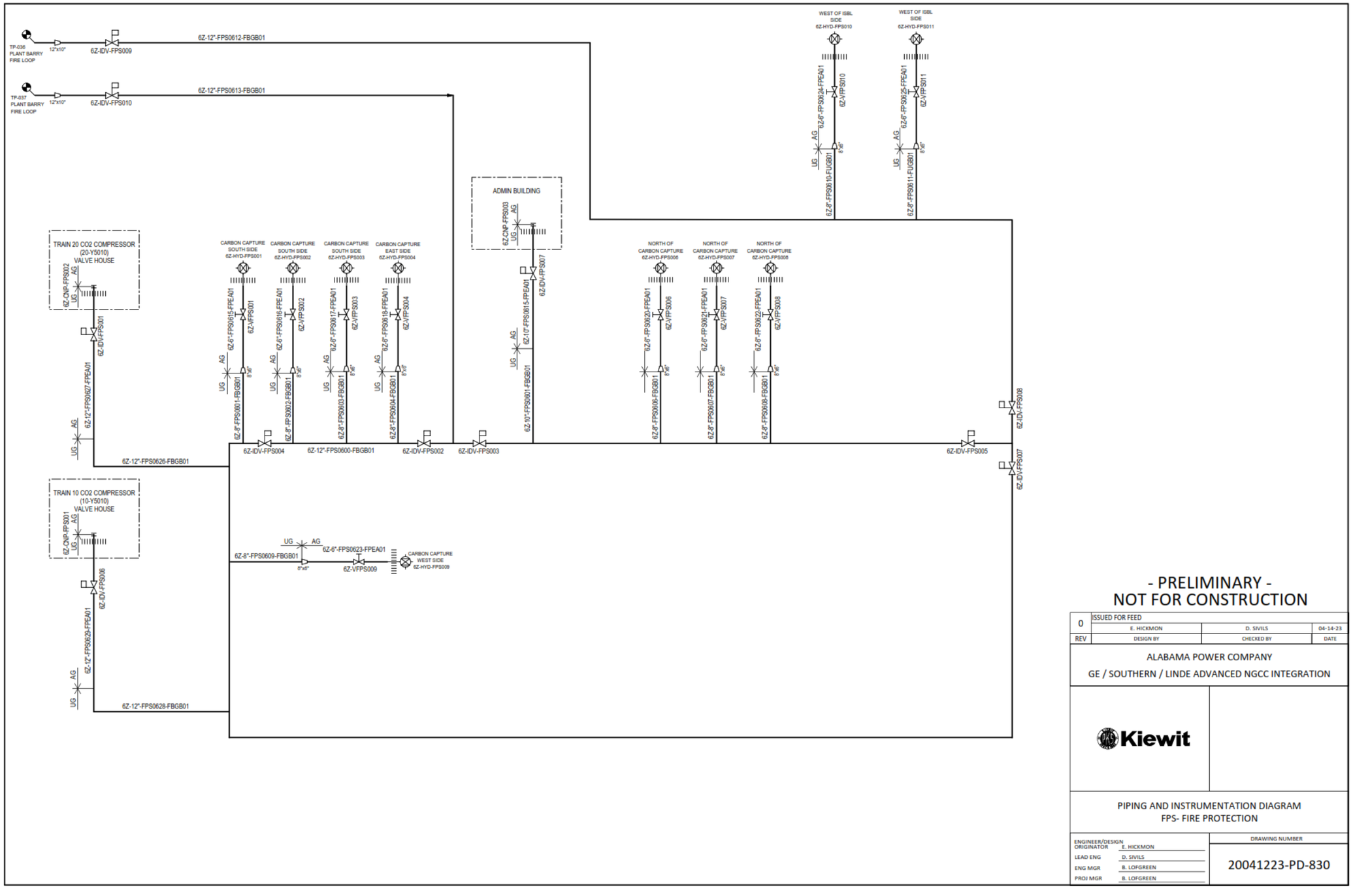

- PRELIMINARY -
NOT FOR CONSTRUCTION

REV	DESIGN BY	CHECKED BY	DATE
0	ISSUED FOR FEED		
	E. HICKMON	D. SIVILS	04-14-23

ALABAMA POWER COMPANY

GE / SOUTHERN / LINDE ADVANCED NGCC INTEGRATION

Kiewit

PIPING AND INSTRUMENTATION DIAGRAM
FPS- FIRE PROTECTION

ENGINEER/DESIGN ORIGINATOR	E. HICKMON
LEAD ENG	D. SIVILS
ENG MGR	B. LOFGREEN
PROJ MGR	B. LOFGREEN

DRAWING NUMBER

20041223-PD-830

NOTES:

1. PROVIDE THREADED HALF-COUPLING FOR THREAD PROTECTION ONLY.

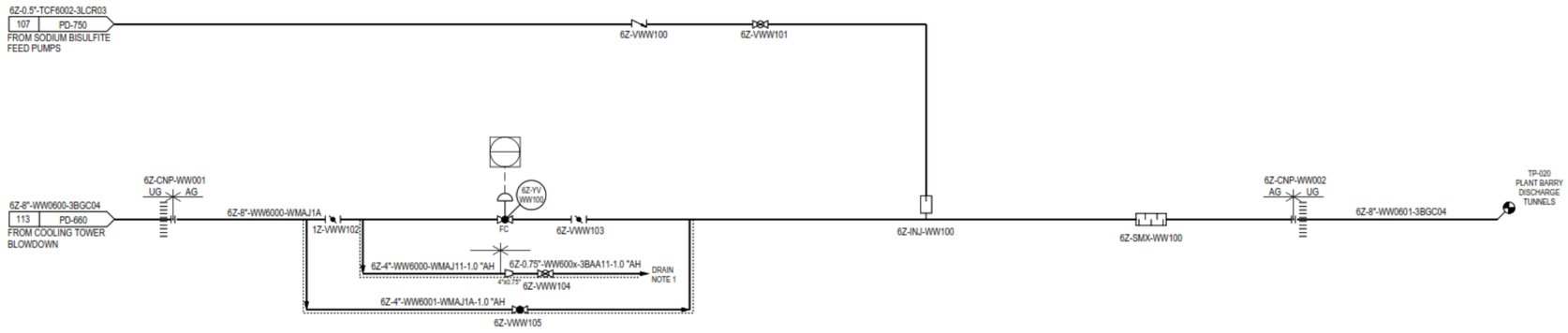

- PRELIMINARY -
NOT FOR CONSTRUCTION

REV			
0	ISSUED FOR FEED		
	E. HICKMON	D. SIVILS	04-14-23
	DESIGN BY	CHECKED BY	DATE

ALABAMA POWER COMPANY
GE / SOUTHERN / LINDE ADVANCED NGCC INTEGRATION

Kiewit

PIPING AND INSTRUMENTATION DIAGRAM
WW- WASTE WATER

		DRAWING NUMBER
ENGINEER/DESIGN ORIGINATOR	E. HICKMON	20041223-PD-910
LEAD ENG	D. SIVILS	
ENG MGR	B. LOFGREEN	
PROJ MGR	B. LOFGREEN	

NOTES:

1. SEE KIEWIT DWG: (L)
   SEE VENDOR DWG: (L)
2. SEE KIEWIT DWG: (L)
   SEE VENDOR DWG: (L)
3. PROVIDE THREADED HALF-COUPLING FOR THREAD PROTECTION ONLY.
4. INSULATION AND/OR HEAT TRACE TO EXTEND BELOW GRADE PER STANDARD MECHANICAL DETAILS.

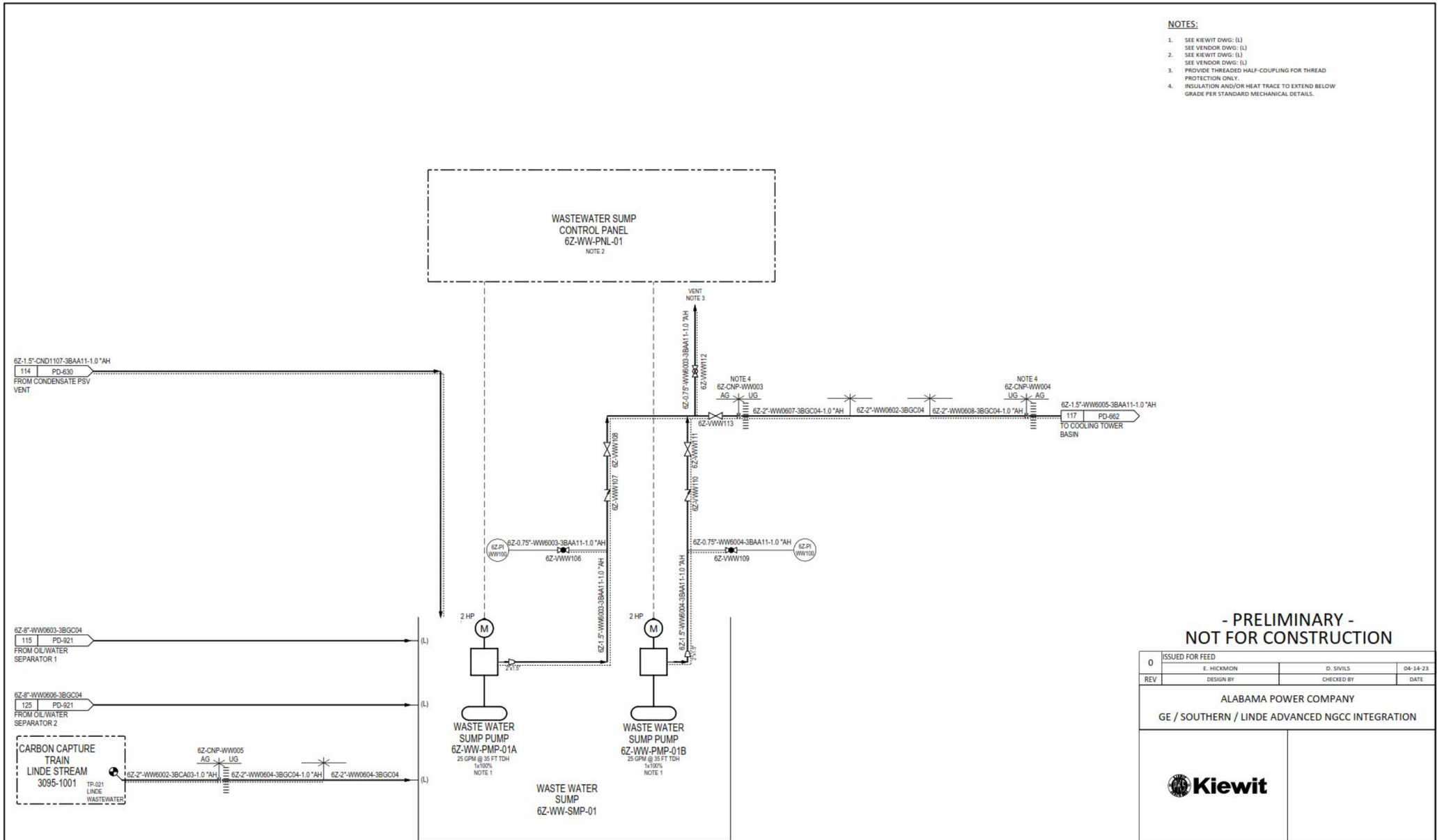

- PRELIMINARY -
NOT FOR CONSTRUCTION

REV	DESIGN BY	CHECKED BY	DATE
0	ISSUED FOR FEED		
	E. HICKMON	D. SIVILS	04-14-23

ALABAMA POWER COMPANY
GE / SOUTHERN / LINDE ADVANCED NGCC INTEGRATION

Kiewit

PIPING AND INSTRUMENTATION DIAGRAM
WW- WASTE WATER

ENGINEER/DESIGN ORIGINATOR	E. HICKMON
LEAD ENG	D. SIVILS
ENG MGR	B. LOFGREEN
PROJ MGR	B. LOFGREEN

DRAWING NUMBER
20041223-PD-911

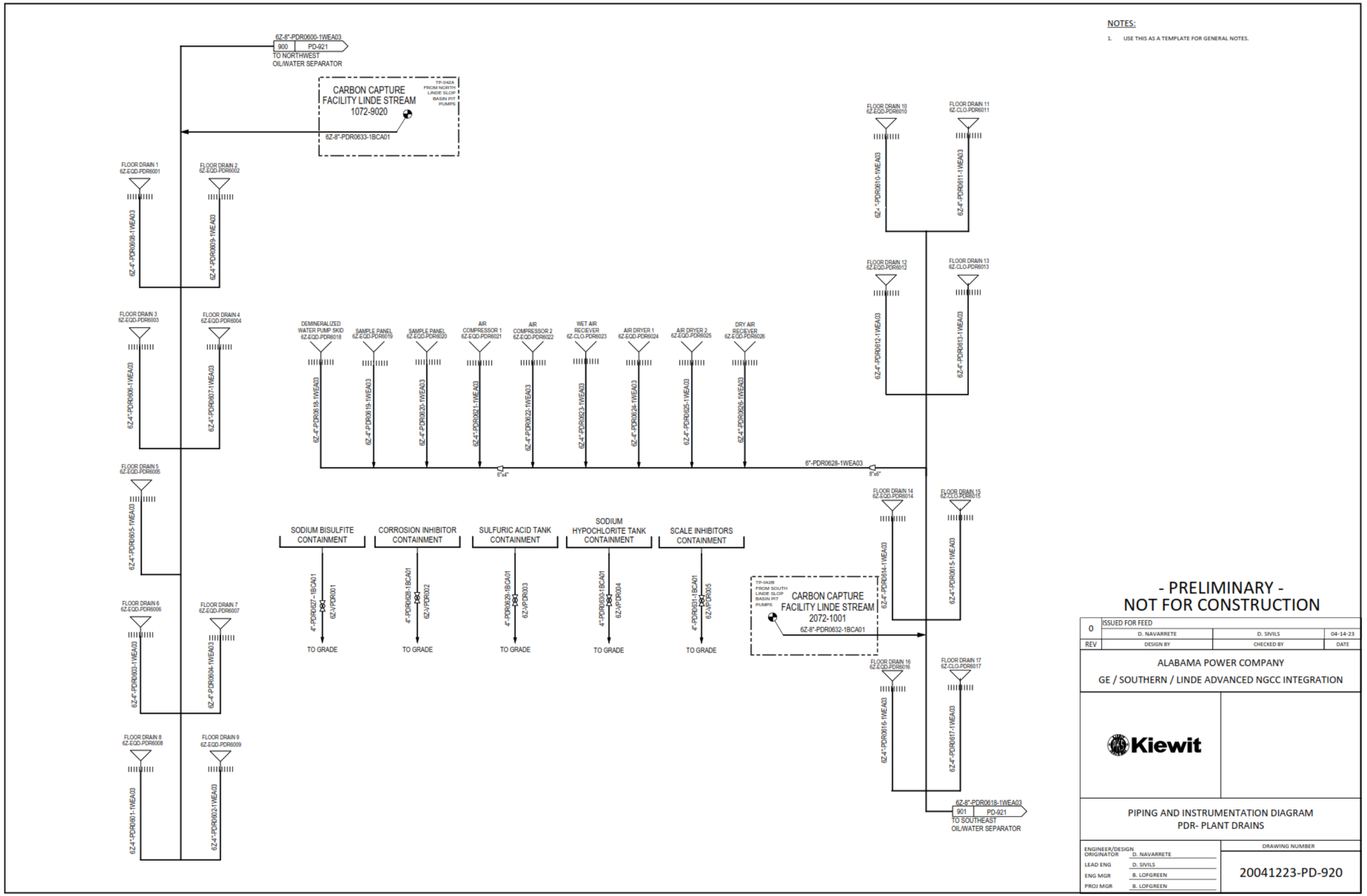
NOTES:
1. USE THIS AS A TEMPLATE FOR GENERAL NOTES.
6Z-8"-PDR0600-1WEA03
900 PD-921
TO NORTHWEST OIL/WATER SEPARATOR
CARBON CAPTURE FACILITY LINDE STREAM 1072-9020
TP-042A FROM NORTH LINDE SLOP BASIN PIT PUMPS
6Z-8"-PDR0633-1BCA01
FLOOR DRAIN 1 6Z-EQD-PDR6001
FLOOR DRAIN 2 6Z-EQD-PDR6002
FLOOR DRAIN 3 6Z-EQD-PDR6003
FLOOR DRAIN 4 6Z-EQD-PDR6004
FLOOR DRAIN 5 6Z-EQD-PDR6005
FLOOR DRAIN 6 6Z-EQD-PDR6006
FLOOR DRAIN 7 6Z-EQD-PDR6007
FLOOR DRAIN 8 6Z-EQD-PDR6008
FLOOR DRAIN 9 6Z-EQD-PDR6009
FLOOR DRAIN 10 6Z-EQD-PDR6010
FLOOR DRAIN 11 6Z-CLO-PDR6011
FLOOR DRAIN 12 6Z-EQD-PDR6012
FLOOR DRAIN 13 6Z-CLO-PDR6013
FLOOR DRAIN 14 6Z-EQD-PDR6014
FLOOR DRAIN 15 6Z-CLO-PDR6015
FLOOR DRAIN 16 6Z-EQD-PDR6016
FLOOR DRAIN 17 6Z-CLO-PDR6017
DEMINERALIZED WATER PUMP SKID 6Z-EQD-PDR6018
SAMPLE PANEL 6Z-EQD-PDR6019
SAMPLE PANEL 6Z-EQD-PDR6020
AIR COMPRESSOR 1 6Z-EQD-PDR6021
AIR COMPRESSOR 2 6Z-EQD-PDR6022
WET AIR RECIEVER 6Z-CLO-PDR6023
AIR DRYER 1 6Z-EQD-PDR6024
AIR DRYER 2 6Z-EQD-PDR6025
DRY AIR RECIEVER 6Z-EQD-PDR6026
6"-PDR0628-1WEA03
SODIUM BISULFITE CONTAINMENT
CORROSION INHIBITOR CONTAINMENT
SULFURIC ACID TANK CONTAINMENT
SODIUM HYPOCHLORITE TANK CONTAINMENT
SCALE INHIBITORS CONTAINMENT
TO GRADE
TP-042B FROM SOUTH LINDE SLOP BASIN PIT PUMPS
CARBON CAPTURE FACILITY LINDE STREAM 2072-1001
6Z-8"-PDR0632-1BCA01
6Z-8"-PDR0618-1WEA03
901 PD-921
TO SOUTHEAST OIL/WATER SEPARATOR
- PRELIMINARY -
NOT FOR CONSTRUCTION
0 ISSUED FOR FEED
REV DESIGN BY: D. NAVARRETE CHECKED BY: D. SIVILS DATE: 04-14-23
ALABAMA POWER COMPANY
GE / SOUTHERN / LINDE ADVANCED NGCC INTEGRATION
Kiewit
PIPING AND INSTRUMENTATION DIAGRAM
PDR- PLANT DRAINS
ENGINEER/DESIGN ORIGINATOR D. NAVARRETE
LEAD ENG D. SIVILS
ENG MGR B. LOFGREEN
PROJ MGR B. LOFGREEN
DRAWING NUMBER
20041223-PD-920

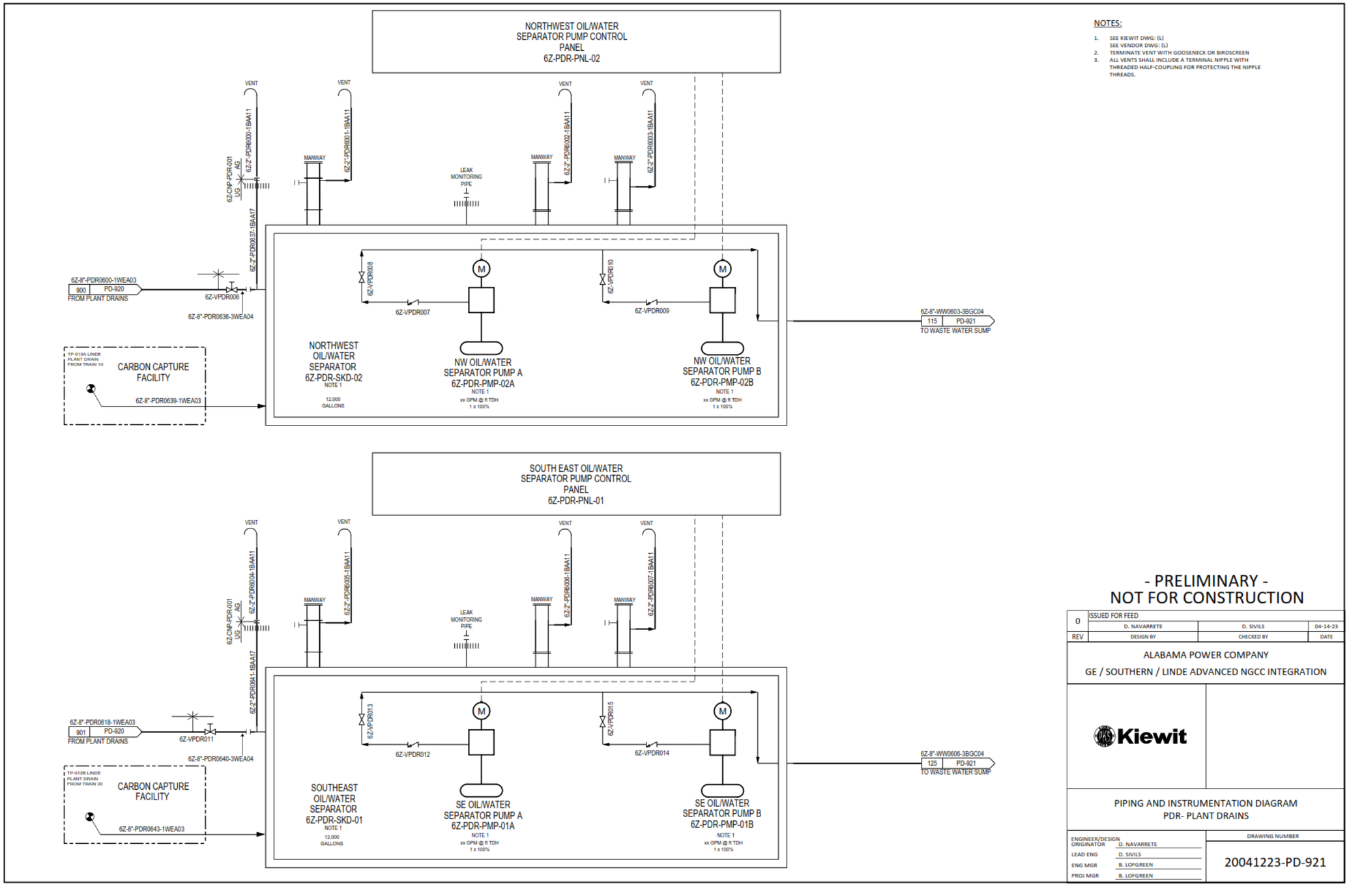

NOTES:

1. SEE KIEWIT DWG: (L)
   SEE VENDOR DWG: (L)
2. TERMINATE VENT WITH GOOSENECK OR BIRDSCREEN
3. ALL VENTS SHALL INCLUDE A TERMINAL NIPPLE WITH THREADED HALF-COUPLING FOR PROTECTING THE NIPPLE THREADS.

- PRELIMINARY -
NOT FOR CONSTRUCTION

REV	DESIGN BY	CHECKED BY	DATE
0	ISSUED FOR FEED		
	D. NAVARRETE	D. SIVILS	04-14-23

ALABAMA POWER COMPANY

GE / SOUTHERN / LINDE ADVANCED NGCC INTEGRATION

Kiewit

PIPING AND INSTRUMENTATION DIAGRAM
PDR- PLANT DRAINS

ENGINEER/DESIGN ORIGINATOR	D. NAVARRETE
LEAD ENG	D. SIVILS
ENG MGR	B. LOFGREEN
PROJ MGR	B. LOFGREEN

DRAWING NUMBER

20041223-PD-921

Appendix M

OSBL Fire Protection Layout

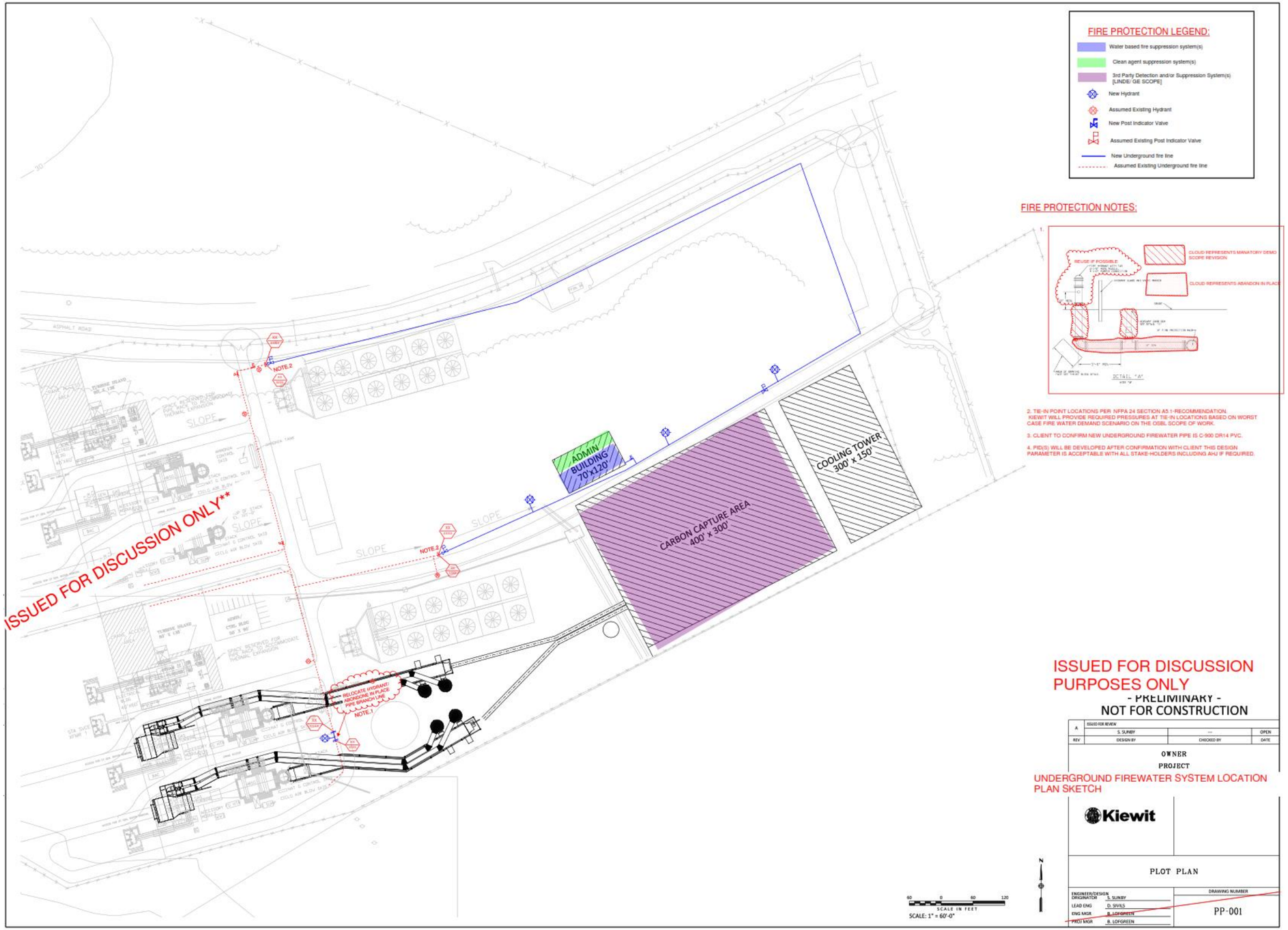
FIRE PROTECTION LEGEND:
Water based fire suppression system(s)
Clean agent suppression system(s)
3rd Party Detection and/or Suppression System(s) [LINDE/ GE SCOPE]
New Hydrant
Assumed Existing Hydrant
New Post Indicator Valve
Assumed Existing Post Indicator Valve
New Underground fire line
Assumed Existing Underground fire line
FIRE PROTECTION NOTES:
2. TIE-IN POINT LOCATIONS PER NFPA 24 SECTION A5.1-RECOMMENDATION. KIEWIT WILL PROVIDE REQUIRED PRESSURES AT TIE-IN LOCATIONS BASED ON WORST CASE FIRE WATER DEMAND SCENARIO ON THE OSBL SCOPE OF WORK.
3. CLIENT TO CONFIRM NEW UNDERGROUND FIREWATER PIPE IS C-900 DR14 PVC.
4. PID(S) WILL BE DEVELOPED AFTER CONFIRMATION WITH CLIENT THIS DESIGN PARAMETER IS ACCEPTABLE WITH ALL STAKE-HOLDERS INCLUDING AHJ IF REQUIRED.
REUSE IF POSSIBLE
CLOUD REPRESENTS MANATORY DEMO SCOPE REVISION
CLOUD REPRESENTS ABANDON IN PLACE
ISSUED FOR DISCUSSION ONLY**
ADMIN BUILDING 70'x120'
COOLING TOWER 300' x 150'
CARBON CAPTURE AREA 400' x 300'
RELOCATE HYDRANT/ MONITOR IN PLACE FIRE BRANCH LINE NOTE 1
NOTE 2
SLOPE
ASPHALT ROAD
ISSUED FOR DISCUSSION PURPOSES ONLY
- PRELIMINARY -
NOT FOR CONSTRUCTION
OWNER
PROJECT
UNDERGROUND FIREWATER SYSTEM LOCATION PLAN SKETCH
Kiewit
PLOT PLAN
PP-001
SCALE: 1" = 60'-0"

Appendix N

CCS Admin Building Layout

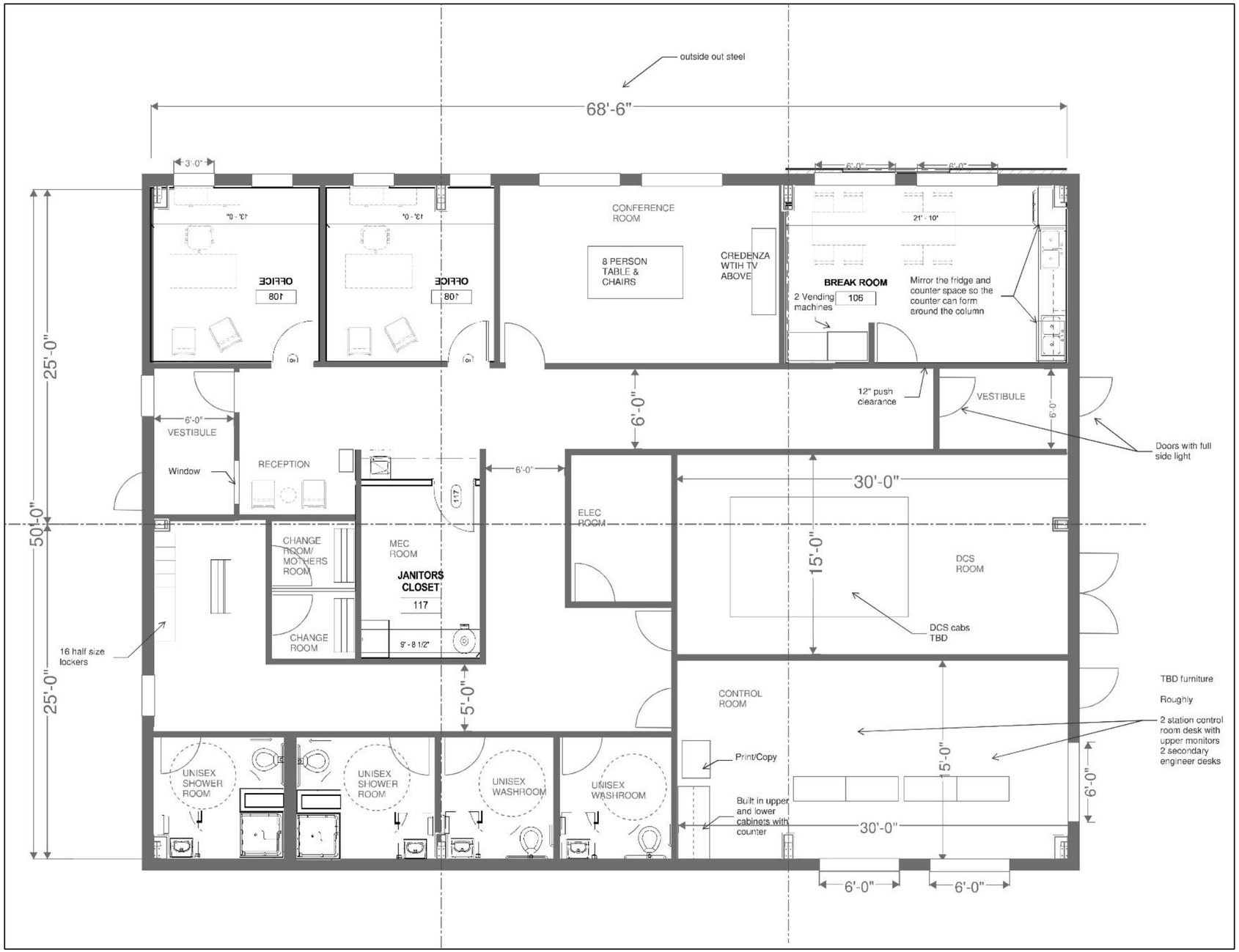
outside out steel
68'-6"
25'-0"
50'-0"
25'-0"
3'-0"
6'-0"
6'-0"
OFFICE
108
OFFICE
108
CONFERENCE ROOM
8 PERSON TABLE & CHAIRS
CREDENZA WTIH TV ABOVE
21' - 10"
BREAK ROOM
2 Vending machines
106
Mirror the fridge and counter space so the counter can form around the column
12" push clearance
VESTIBULE
6'-0"
6'-0"
VESTIBULE
Window
RECEPTION
6'-0"
Doors with full side light
30'-0"
ELEC ROOM
CHANGE ROOM/ MOTHERS ROOM
MEC ROOM
JANITORS CLOSET
117
CHANGE ROOM
9' - 8 1/2"
15'-0"
DCS ROOM
DCS cabs TBD
16 half size lockers
5'-0"
CONTROL ROOM
TBD furniture
Roughly
2 station control room desk with upper monitors 2 secondary engineer desks
Print/Copy
15'-0"
6'-0"
UNISEX SHOWER ROOM
UNISEX SHOWER ROOM
UNISEX WASHROOM
UNISEX WASHROOM
Built in upper and lower cabinets with counter
30'-0"
6'-0"
6'-0"

Appendix O

OSBL 230-13.8 kV Substation General Arrangement

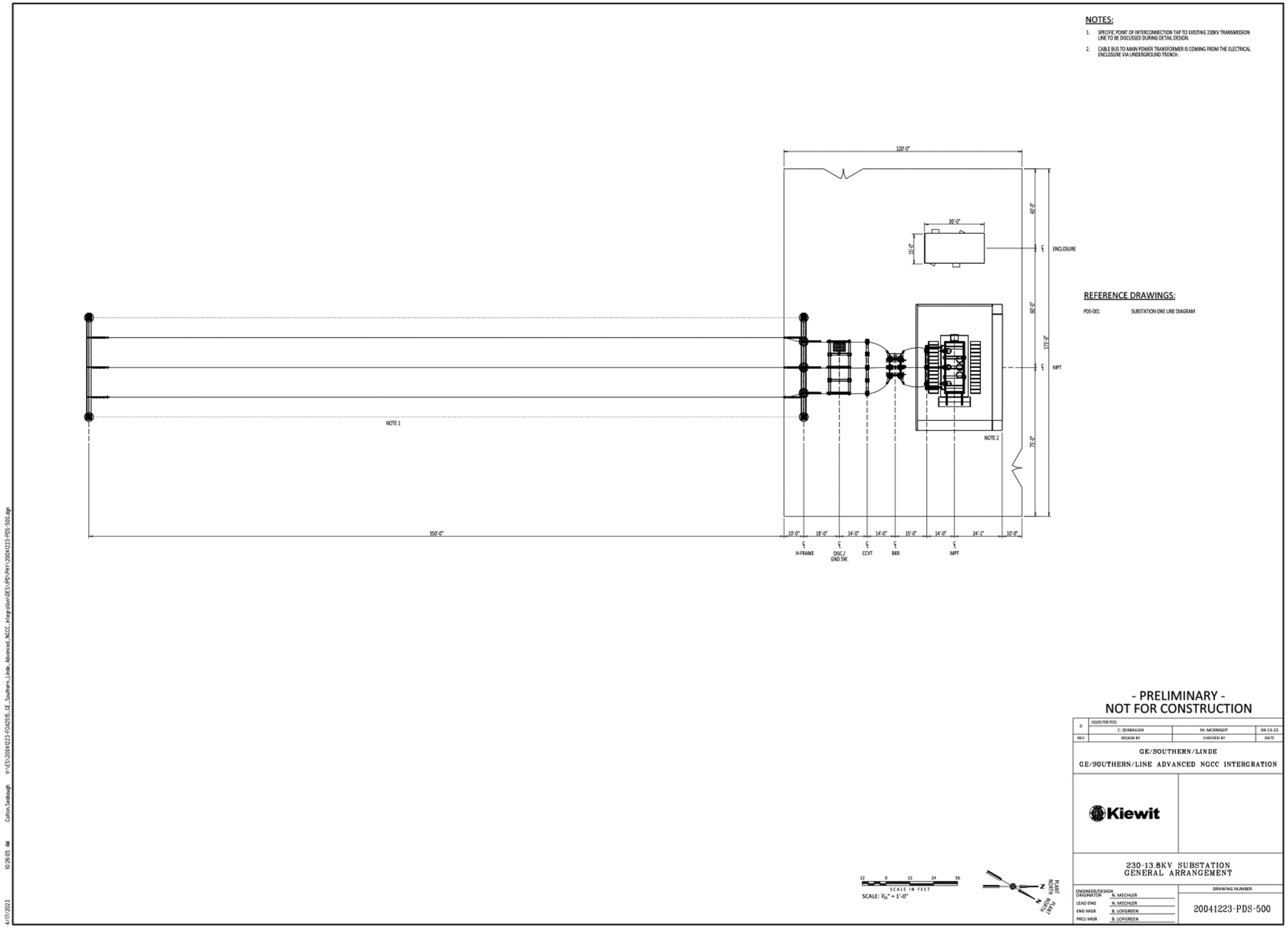
NOTES:
1. SPECIFIC POINT OF INTERCONNECTION TAP TO EXISTING 230KV TRANSMISSION LINE TO BE DISCUSSED DURING DETAIL DESIGN.
2. CABLE BUS TO MAIN POWER TRANSFORMER IS COMING FROM THE ELECTRICAL ENCLOSURE VIA UNDERGROUND TRENCH.
REFERENCE DRAWINGS:
PDS-001 SUBSTATION ONE LINE DIAGRAM
120'-0"
30'-0"
15'-0"
40'-0"
60'-0"
175'-0"
75'-0"
ENCLOSURE
MPT
NOTE 1
NOTE 2
350'-0"
10'-0"
18'-0"
14'-0"
14'-0"
15'-0"
14'-0"
24'-1"
10'-0"
H-FRAME
DISC./ GND SW.
CCVT
BKR
MPT
- PRELIMINARY -
NOT FOR CONSTRUCTION
D
ISSUED FOR FEED
C. SEABAUGH
M. MCKNIGHT
04-13-23
REV
DESIGN BY
CHECKED BY
DATE
GE/SOUTHERN/LINDE
GE/SOUTHERN/LINE ADVANCED NGCC INTERGRATION
Kiewit
230-13.8KV SUBSTATION
GENERAL ARRANGEMENT
ENGINEER/DESIGN ORIGINATOR N. MECHLER
LEAD ENG N. MECHLER
ENG MGR B. LOFGREEN
PROJ MGR B. LOFGREEN
DRAWING NUMBER
20041223-PDS-500
SCALE IN FEET
SCALE: 3/16" = 1'-0"
PLANT NORTH
4/17/2023
10:26:05 AM
Colton.Seabaugh
V:\ES\20041223-F0425\15_GE_Southern_Linde_Advanced_NGCC_Integration\DES\PDS\PHY\20041223-PDS-500.dgn

Appendix P

OSBL Mechanical Equipment List

Kiewit

MECHANICAL EQUIPMENT LIST
20041223-MLE-001

RETROFITTABLE ADVANCED COMBINED CYCLE INTEGRATION FOR FLEXIBLE DECARBONIZED GENERATION
DE-FE-0032131

KIEWIT PROJECT NO. 20041223

ISSUED: APRIL 14, 2023

REVISION 0 – ISSUED FOR FEED

GE/SOUTHERN/LINDE ADVANCED NGCC INTEGRATION EQUIPMENT LIST

Rev. / Date: Rev. 0 - 4/14/23
CKD / Date: 4/14/23

TAG NO.	P&ID DRAWING NO.	EQUIPMENT DESCRIPTION	EQUIPMENT PARAMETERS	SPECIFICATION NO.	NOTES/COMMENTS
COOLING WATER SYSTEM					
6Z-CWS-PMP-01A	20041223-PD-660	Circulating Water Pump A	5,500 HP	94.03.62.150	
6Z-CWS-PMP-01B	20041223-PD-660	Circulating Water Pump B	5,500 HP	94.03.62.150	
6Z-CWS-PMP-01C	20041223-PD-660	Circulating Water Pump C	5,500 HP	94.03.62.150	
6Z-CWS-PMP-02	20041223-PD-660	Auxiliary Circulation Water Pump	500 HP*	94.03.62.150	*Assumed value is 10% of Circulating Water Pump HP.
6Z-CWS-HEX-01	20041223-PD-661	EGR Heat Exchanger	DESIGN FLOW/PRESSURE: 20,359 GPM @ 145 PSI	94.03.52.100	H/X provided by GE, Kiewit to supply cooling water to cold side.
6Z-CWS-HEX-02	20041223-PD-661	EGR Heat Exchanger	DESIGN FLOW/PRESSURE: 20,359 GPM @ 145 PSI	94.03.52.100	H/X provided by GE, Kiewit to supply cooling water to cold side.
6Z-CWS-CTC-01A	20041223-PD-662	Cooling Tower Cell A	142,450 GPM	94.03.52.175	
6Z-CWS-CTC-01B	20041223-PD-662	Cooling Tower Cell B	142,450 GPM	94.03.52.175	
6Z-CWS-CTC-01C	20041223-PD-662	Cooling Tower Cell C	142,450 GPM	94.03.52.175	
6Z-CWS-CTC-01D	20041223-PD-662	Cooling Tower Cell D	142,450 GPM	94.03.52.175	
6Z-CWS-CTC-01E	20041223-PD-662	Cooling Tower Cell E	142,450 GPM	94.03.52.175	
6Z-CWS-FAN-01A	20041223-PD-662	Cooling Tower Fan A	-	94.03.52.175	
6Z-CWS-FAN-01B	20041223-PD-662	Cooling Tower Fan B	-	94.03.52.175	
6Z-CWS-FAN-01C	20041223-PD-662	Cooling Tower Fan C	-	94.03.52.175	
6Z-CWS-FAN-01D	20041223-PD-662	Cooling Tower Fan D	-	94.03.52.175	
6Z-CWS-FAN-01E	20041223-PD-662	Cooling Tower Fan E	-	94.03.52.175	
6Z-CWS-MFN-01A	20041223-PD-662	Cooling Tower Fan A Motor	250 HP	94.03.52.175	
6Z-CWS-MFN-01B	20041223-PD-662	Cooling Tower Fan B Motor	250 HP	94.03.52.175	
6Z-CWS-MFN-01C	20041223-PD-662	Cooling Tower Fan C Motor	250 HP	94.03.52.175	
6Z-CWS-MFN-01D	20041223-PD-662	Cooling Tower Fan D Motor	250 HP	94.03.52.175	
6Z-CWS-MFN-01E	20041223-PD-662	Cooling Tower Fan E Motor	250 HP	94.03.52.175	
6Z-CWS-CTC-01F	20041223-PD-663	Cooling Tower Cell F	142,450 GPM	94.03.52.175	
6Z-CWS-CTC-01G	20041223-PD-663	Cooling Tower Cell G	142,450 GPM	94.03.52.175	
6Z-CWS-CTC-01H	20041223-PD-663	Cooling Tower Cell H	142,450 GPM	94.03.52.175	
6Z-CWS-CTC-01I	20041223-PD-663	Cooling Tower Cell I	142,450 GPM	94.03.52.175	
6Z-CWS-CTC-01J	20041223-PD-663	Cooling Tower Cell J	142,450 GPM	94.03.52.175	
6Z-CWS-FAN-01F	20041223-PD-663	Cooling Tower Fan F	-	94.03.52.175	
6Z-CWS-FAN-01G	20041223-PD-663	Cooling Tower Fan G	-	94.03.52.175	
6Z-CWS-FAN-01H	20041223-PD-663	Cooling Tower Fan H	-	94.03.52.175	
6Z-CWS-FAN-01I	20041223-PD-663	Cooling Tower Fan I	-	94.03.52.175	
6Z-CWS-FAN-01J	20041223-PD-663	Cooling Tower Fan J	-	94.03.52.175	
6Z-CWS-MFN-01F	20041223-PD-663	Cooling Tower Fan F Motor	250 HP	94.03.52.175	
6Z-CWS-MFN-01G	20041223-PD-663	Cooling Tower Fan G Motor	250 HP	94.03.52.175	
6Z-CWS-MFN-01H	20041223-PD-663	Cooling Tower Fan H Motor	250 HP	94.03.52.175	
6Z-CWS-MFN-01I	20041223-PD-663	Cooling Tower Fan I Motor	250 HP	94.03.52.175	
6Z-CWS-MFN-01J	20041223-PD-663	Cooling Tower Fan J Motor	250 HP	94.03.52.175	
FLUE GAS SYSTEM					
6A-FLG-BLW-01A	20041223-PD-680	Unit 6A HRSG Damper Seal Air Blower	50 HP	94.03.30D	
6A-FLG-BLW-01B	20041223-PD-680	Unit 6A HRSG Damper Seal Air Blower	50 HP	94.03.30D	
6A-FLG-SKD-01	20041223-PD-680	Unit 6A HRSG Tie-In Damper Seal Air Skid	-	94.03.30D	
6A-DPR-FLG-180	20041223-PD-680	Unit 6A HRSG Tie-In Damper	Design Flow: 2,452,737 lb/hr, 180" H x 180" W	94.03.30D	
6B-FLG-BLW-01A	20041223-PD-680	Unit 6B HRSG Damper Seal Air Blower	50 HP	94.03.30D	
6B-FLG-BLW-01B	20041223-PD-680	Unit 6B HRSG Damper Seal Air Blower	50 HP	94.03.30D	
6B-FLG-SKD-01	20041223-PD-680	Unit 6B HRSG Tie-In Damper Seal Air Skid	-	94.03.30D	
6B-DPR-FLG-280	20041223-PD-680	Unit 6B HRSG Tie-In Damper	Design Flow: 2,452,737 lb/hr, 180" H x 180" W	94.03.30D	
6A-FLG-BLW-02A	20041223-PD-681	Unit 6A CC Train Damper Seal Air Blower	50 HP	94.03.30D	
6A-FLG-BLW-02B	20041223-PD-681	Unit 6A CC Train Damper Seal Air Blower	50 HP	94.03.30D	
6A-FLG-SKD-02	20041223-PD-681	Unit 6A CC Train Tie-In Damper Seal Air Skid	-	94.03.30D	
6A-DPR-FLG-190	20041223-PD-681	Unit 6A CC Train Damper	Design Flow: 2,452,737 lb/hr, 180" H x 180" W	94.03.30D	
6B-FLG-BLW-02A	20041223-PD-681	Unit 6B CC Train Damper Seal Air Blower	50 HP	94.03.30D	
6B-FLG-BLW-02B	20041223-PD-681	Unit 6B CC Train Damper Seal Air Blower	50 HP	94.03.30D	
6B-FLG-SKD-02	20041223-PD-681	Unit 6B CC Train Tie-In Damper Seal Air Skid	-	94.03.30D	
6B-DPR-FLG-290	20041223-PD-681	Unit 6B CC Train Damper	Design Flow: 2,452,737 lb/hr, 180" H x 180" W	94.03.30D	
DEMINERALIZED WATER SYSTEM					
6Z-DWS-PMP-01A	20041223-PD-710	Demineralized Water Forwarding Pump A	15 HP	94.03.62.175	
6Z-DWS-PMP-01B	20041223-PD-710	Demineralized Water Forwarding Pump B	15 HP	94.03.62.175	
6Z-DWS-SKD-01A	20041223-PD-710	Demineralized Water Pump Skid	DESIGN FLOW/PRESSURE: 115 GPM @ 227 FT TDH 2 X 100%	94.03.62.175	
SAMPLING					
6Z-SMP-PNL-01	20041223-PD-730	Sample Panel	-	94.03.34.100	
6Z-SMP-SKD-01	20041223-PD-730	Temperature Control Unit	-	94.03.34.100	
TOWER CHEMICAL FEED					
6Z-TCF-PMP-01A	20041223-PD-750	Cooling Tower Blowdown Sodium Bisulfite Feed Pump A	0.5 HP	94.03.34.125	
6Z-TCF-PMP-01B	20041223-PD-750	Cooling Tower Blowdown Sodium Bisulfite Feed Pump B	0.5 HP	94.03.34.125	
6Z-TCF-SKD-01	20041223-PD-750	Cooling Tower Blowdown Sodium Bisulfite Feed Pump Skid	(L) DESIGN FLOW / PRESSURE 2 X 100%	94.03.34.125	Sizing dependent on water quality and cooling tower characteristics
6Z-TCF-PNL-01	20041223-PD-750	Cooling Tower Blowdown Sodium Bisulfite Feed Pump Skid Panel	-	94.03.34.125	Panel to be supplied by the pump vendor.
6Z-TCF-TNK-01	20041223-PD-750	Cooling Tower Blowdown Sodium Bisulfite Storage Tote	400 GAL	94.03.34.125	
6Z-TCF-PMP-02A	20041223-PD-750	Corrosion Inhibitor Feed Pump A	0.5 HP	94.03.34.125	
6Z-TCF-PMP-02B	20041223-PD-750	Corrosion Inhibitor Feed Pump B	0.5 HP	94.03.34.125	
6Z-TCF-SKD-02	20041223-PD-750	Corrosion Inhibitor Feed Pump Skid	(L) DESIGN FLOW / PRESSURE 2 X 100%	94.03.34.125	Sizing dependent on water quality and cooling tower characteristics
6Z-TCF-PNL-02	20041223-PD-750	Corrosion Inhibitor Feed Pump Skid Panel	-	94.03.34.125	Panel to be supplied by the pump vendor.
6Z-TCF-TNK-02	20041223-PD-750	Corrosion Inhibitor Storage Tote	400 GAL	94.03.34.125	
6Z-TCF-TNK-03	20041223-PD-751	Sulfuric Acid Tank	4,000 GAL	94.03.34.125	

GE/SOUTHERN/LINDE ADVANCED NGCC INTEGRATION EQUIPMENT LIST

Rev. / Date: Rev. 0 - 4/14/23
CKD / Date: 4/14/23

6Z-TCF-PMP-03A	20041223-PD-751	Sulfuric Acid Feed Pump A	0.5 HP	94.03.34.125	
6Z-TCF-PMP-03B	20041223-PD-751	Sulfuric Acid Feed Pump B	0.5 HP	94.03.34.125	
6Z-TCF-SKD-03	20041223-PD-751	Sulfuric Acid Feed Pump Skid	DESIGN FLOW/PRESSURE: (L) 2 X 100%	94.03.34.125	*Sizing dependent on water quality and cooling tower characteristics*
6Z-TCF-PNL-03	20041223-PD-751	Sulfuric Acid Feed Pump Skid Control Panel	-	94.03.34.125	*Panel to be supplied by the pump vendor.*
6Z-TCF-TNK-04	20041223-PD-751	Sodium Hypochlorite Tank	2,000 GAL	94.03.34.125	
6Z-TCF-PMP-04A	20041223-PD-751	Sodium Hypochlorite Feed Pump A	0.5 HP	94.03.34.125	
6Z-TCF-PMP-04B	20041223-PD-751	Sodium Hypochlorite Feed Pump B	0.5 HP	94.03.34.125	
6Z-TCF-SKD-04	20041223-PD-751	Sodium Hypochlorite Feed Pump Skid	DESIGN FLOW/PRESSURE: (L) 2 X 100%	94.03.34.125	*Sizing dependent on water quality and cooling tower characteristics*
6Z-TCF-PNL-04	20041223-PD-751	Sodium Hypochlorite Feed Pump Skid Control Panel	-	94.03.34.125	*Panel to be supplied by the pump vendor.*
6Z-TCF-PMP-06A	20041223-PD-751	Cooling Tower Chem Feed Sump Pump A	1	94.03.34.125	
6Z-TCF-PMP-06B	20041223-PD-751	Cooling Tower Chem Feed Sump Pump B	1	94.03.34.125	
6Z-TCF-PMP-05A	20041223-PD-752	Scale Inhibitor Feed Pump A	0.5 HP	94.03.34.125	
6Z-TCF-PMP-05B	20041223-PD-752	Scale Inhibitor Feed Pump B	0.5 HP	94.03.34.125	
6Z-TCF-SKD-05	20041223-PD-752	Scale Inhibitor Feed Pump Skid	DESIGN FLOW/PRESSURE: (L) 2 X 100%	94.03.34.125	*Sizing dependent on water quality and cooling tower characteristics*
6Z-TCF-PNL-05	20041223-PD-752	Scale Inhibitor Feed Pump Skid Control Panel	-	94.03.34.125	*Panel to be supplied by the pump vendor.*
6Z-TCF-TNK-05	20041223-PD-752	Scale Inhibitor Storage Tote	-	94.03.34.125	
SERVICE WATER					
6Z-SWS-PMP-01A	20041223-PD-800	Service Water Pump	150 HP	94.03.62.175	
6Z-SWS-PMP-01B	20041223-PD-800	Service Water Pump	150 HP	94.03.62.175	
POTABLE WATER					
6Z-PWS-PMP-01A	20041223-PD-810	Potable Water Pump A	1 HP	94.03.62.175	
6Z-PWS-PMP-01B	20041223-PD-810	Potable Water Pump B	1 HP	94.03.62.175	
6Z-PWS-SKD-01	20041223-PD-810	Potable Water Tempering Skid	DESIGN FLOW/PRESSURE: 48.3 GPM @ 4.07 FT TDH 2 X 100%	94.03.62.175	
INSTRUMENT AIR					
6Z-IA-CMP-01	20041223-PD-820	Air Compressor	DESIGN FLOW/PRESSURE: 351 SCFM @ 120 PSI	94.03.38.100	
6Z-IA-CMP-02	20041223-PD-820	Air Compressor	DESIGN FLOW/PRESSURE: 351 SCFM @ 120 PSI	94.03.38.100	
6Z-IA-REC-01	20041223-PD-820	Wet Air Reciever	DESIGN VOLUME/PRESSURE: 180 GAL @120 PSI	94.03.38.100	
6Z-IA-ADY-01	20041223-PD-821	Air Dryer	MAX SYSTEM DESIGN FLOW: 351 SCFM @ 120 PSI	94.03.38.100	
6Z-IA-ADY-02	20041223-PD-821	Air Dryer	MAX SYSTEM DESIGN FLOW: 351 SCFM @ 120 PSI	94.03.38.100	
6Z-IA-REC-02	20041223-PD-821	Dry Air Receiver	DESIGN VOLUME/PRESSURE: 180 GAL @ 120 PSI	94.03.38.100	
6Z-IA-TNK-01	20041223-PD-822	Compressed Air Storage Tank	DESIGN VOLUME/PRESSURE: 50 GAL* @ 120 PSI	94.03.38.100	**Assumed volume, actual volume to be determined by 6Z-PCV-LP5009 equipment vendor*
WASTE WATER					
6Z-WW-PMP-01A	20041223-PD-911	Waste Water Sump Pump	2 HP	94.03.62.175	
6Z-WW-PMP-01B	20041223-PD-911	Waste Water Sump Pump	2 HP	94.03.62.175	
6Z-WW-PNL-01	20041223-PD-911	Waste Water Sump Control Panel	-	94.03.62.175	*Panel to be supplied by the pump vendor.*
PLANT DRAINS					
6Z-PDR-PMP-01A	20041223-PD-921	SE Oil/Water Separator Pump A	(L) HP	94.03.66.175	*HP to be determined after plant drain routing and amine collection review.*
6Z-PDR-PMP-01B	20041223-PD-921	SE Oil/Water Separator Pump B	(L) HP	94.03.66.175	*HP to be determined after plant drain routing and amine collection review.*
6Z-PDR-SKD-01	20041223-PD-921	Southeast Oil/Water Separator	DESIGN VOLUME: 12,000 GAL*	94.03.66.175	**Assumed volume, actual volume to be determined after plant drain routing and amine collection review.*
6Z-PDR-PNL-01	20041223-PD-921	Southeast Oil/Water Separator Pump Control Panel	-	94.03.66.175	*Panel to be supplied by the pump vendor.*
6Z-PDR-PMP-02A	20041223-PD-921	NW Oil/Water Separator Pump A	(L) HP	94.03.66.175	*HP to be determined after plant drain routing and amine collection review.*
6Z-PDR-PMP-02B	20041223-PD-921	NW Oil/Water Separator Pump B	(L) HP	94.03.66.175	*HP to be determined after plant drain routing and amine collection review.*
6Z-PDR-SKD-02	20041223-PD-921	Northwest Oil/Water Separator	DESIGN VOLUME: 12,000 GAL*	94.03.66.175	**Assumed volume, actual volume to be determined after plant drain routing and amine collection review.*
6Z-PDR-PNL-02	20041223-PD-921	Northwest Oil/Water Separator Pump Control Panel	-	94.03.66.175	*Panel to be supplied by the pump vendor.*

Appendix Q

OSBL Electrical Equipment List

GE/SOUTHERN/LINDE ADVANCED NGCC INTEGRATION
ELECTRICAL EQUIPMENT LIST

REV	DATE	DESCRIPTION	ORIG	CHK	APPR
0	21-APR-2023	ISSUED FOR FEED	NJM	RMS	BRL
A	13-MAR-2023	ISSUED FOR REVIEW	NJM	RMS	BRL

PROJECT	DOCUMENT NUMBER	REVISION
20041223	20041223-ELT-001	0

KIEWIT ENGINEERING GROUP INC. | GANOTEC INC

Electrical Equipment List - IFF

Equipment Tag	Equipment Description	Equipment Type	Rating/Size	Specification Package	Area
6Z-MPT-XFR-1	Main Power Transformer	Transformer	43/58/72 MVA, ONAN/ONAF/ONAF, Z=10.5% @ 43MVA	94.03.20.100	Substation
6Z-MVA-SWG-1	13.8kV Metal Clad Switchgear 1	Switchgear	13.8kV, 3000A, 50kAIC	94.03.08.100	BOP Enclosure
6Z-MVA-SWG-2	13.8kV Metal Clad Switchgear 2	Switchgear	13.8kV, 1200A, 50kAIC	94.03.08.100	EGR Enclosure
6Z-SUS-XFR-11	Secondary Unit Substation Transformer 11	Transformer	13.8kV:4.16kV, 7/8.5MVA, ONAN/ONAF, Z=6.5% @ 7MVA	94.03.20.150	BOP Enclosure
6Z-SUS-XFR-12	Secondary Unit Substation Transformer 12	Transformer	13.8kV:480V, 2.5/3.33MVA, ANAN/ANAF, Z=5.75% @ 2.5MVA	94.03.20.150	BOP Enclosure
6Z-SUS-XFR-21	Secondary Unit Substation Transformer 21	Transformer	13.8kV:4.16kV, 7/8.5MVA, ONAN/ONAF, Z=6.5% @ 7MVA	94.03.20.150	EGR Enclosure
6Z-SUS-XFR-22	Secondary Unit Substation Transformer 22	Transformer	13.8kV:480V, 2.5/3.33MVA, ANAN/ANAF, Z=5.75% @ 2.5MVA	94.03.20.150	EGR Enclosure
6Z-MVC-SWG-11	4.16kV Switchgear 11	Switchgear	4.16kV, 1200A, 25kAIC	94.03.08.100	BOP Enclosure
6Z-MVC-MCC-11	4.16kV Motor Control Center 11	Motor Control Center	4.16kV, 1200A, 25kAIC	94.03.08.100	BOP Enclosure
6Z-MVC-SWG-21	4.16kV Switchgear 21	Switchgear	4.16kV, 1200A, 25kAIC	94.03.08.100	EGR Enclosure
6Z-LVB-SWG-12	480V Switchgear 12	Switchgear	480V, 4000A, 65kAIC	94.03.08.100	BOP Enclosure
6Z-LVB-SWG-22	480V Switchgear 22	Switchgear	480V, 4000A, 65kAIC	94.03.08.100	EGR Enclosure
6Z-LVB-MCC-121	480V Motor Control Center 121	Motor Control Center	480V, 1600A, 65kAIC	94.03.08.100	BOP Enclosure
6Z-LVB-MCC-122	480V Motor Control Center 122	Motor Control Center	480V, 1600A, 65kAIC	94.03.08.100	BOP Enclosure
6Z-LVB-MCC-123	480V Motor Control Center 123	Motor Control Center	480V, 1600A, 65kAIC	94.03.08.100	BOP Enclosure
6Z-LVB-MCC-221	480V Motor Control Center 221	Motor Control Center	480V, 1600A, 65kAIC	94.03.08.100	EGR Enclosure
6Z-LVB-MCC-222	480V Motor Control Center 222	Motor Control Center	480V, 1600A, 65kAIC	94.03.08.100	EGR Enclosure
6Z-MVA-BUS-1	13.8kV Cable Bus 1	Cable Bus	13.8kV, 3000A	94.03.12.150	BOP Enclosure
6Z-LVB-BUS-12	480V Cable Bus 12	Cable Bus	480V, 4000A	94.03.12.150	BOP Enclosure
6Z-LVB-BUS-22	480V Cable Bus 22	Cable Bus	480V, 4000A	94.03.12.150	EGR Enclosure
6Z-LVE-CHG-1	125VDC Battery Charger 1	Battery Charger	480VAC:125VDC	94.03.06.100	BOP Enclosure
6Z-LVE-CHG-2	125VDC Battery Charger 2	Battery Charger	480VAC:125VDC	94.03.06.100	BOP Enclosure
6Z-LVE-BAT-1	125VDC Battery	Battery	125VDC, 830 Ah, 2 hours	94.03.06.100	BOP Enclosure
6Z-LVE-DSW-1	125VDC Battery Disconnect Switch	Disconnect Switch	125VDC, 600A	94.03.06.100	BOP Enclosure
6Z-LVE-PPL-1	125VDC Main Panel	Power Panel	125VDC, 600A, 22kAIC		BOP Enclosure
6Z-LVE-PPL-11	125VDC Admin Building Panel	Power Panel	125VDC, 100A, 22kAIC		BOP Enclosure
6Z-LVE-PPL-12	125VDC Substation Panel	Power Panel	125VDC, 100A, 22kAIC		Substation
6Z-LVE-PPL-13	125VDC EGR Enclosure Panel	Power Panel	125VDC, 100A, 22kAIC		EGR Enclosure
6Z-LVF-UPS-1	120VAC Uninterruptible Power Supply	UPS	125VDC: 120VAC, 30kVA	94.03.06.125	BOP Enclosure
6Z-LVF-XFR-1	UPS Bypass Transformer	Transformer	480VAC: 120VAC, 30kVA	94.03.06.125	BOP Enclosure
6Z-LVF-PPL-1	120VAC UPS Panel	Power Panel	120VAC, 400A, 22kAIC		BOP Enclosure
6Z-LVF-PPL-11	120VAC UPS Admin Building Panel	Power Panel	120VAC, 150A, 22kAIC		BOP Enclosure
6Z-LVF-PPL-12	120VAC UPS Substation Panel	Power Panel	120VAC, 100A, 22kAIC		Substation
6Z-LVF-PPL-13	120VAC EGR Encosure Panel	Power Panel	120VAC, 100A, 22kAIC		EGR Enclosure
6Z-DCS-CAB-1	OSBL DCS Cabinet 1 (IO)	DCS Cabinet		94.03.18.100	BOP Enclosure
6Z-DCS-CAB-2	OSBL DCS Cabinet 2 (Controller)	DCS Cabinet		94.03.18.100	BOP Enclosure
6Z-DCS-CAB-3	DCS Remote IO Cabinet (Cooling Tower)	DCS Cabinet		94.03.18.100	Field
6Z-DCS-CAB-4	DCS Remote IO Cabinet (EGR)	DCS Cabinet		94.03.18.100	EGR Enclosure
6Z-DCS-CAB-5	ISBL DCS Cabinet 1 (IO)	DCS Cabinet		94.03.18.100	ISBL Enclosure
6Z-DCS-CAB-6	ISBL DCS Cabinet 2 (Controller)	DCS Cabinet		94.03.18.100	ISBL Enclosure
6Z-DCS-CAB-7	DCS Server Cabinet A	DCS Cabinet		94.03.18.100	Admin Building
6Z-DCS-CAB-8	DCS Server Cabinet B	DCS Cabinet		94.03.18.100	Admin Building
6Z-NET-CAB-1	OSBL Network Cabinet	Network Cabinet		94.03.18.100	BOP Enclosure
6Z-NET-CAB-2	ISBL Network Cabinet	Network Cabinet		94.03.18.100	ISBL Enclosure
6Z-NET-CAB-3	Admin Building Network Cabinet	Network Cabinet		94.03.18.100	Admin Building
6Z-HTT-PPL-01	Heat Trace Panel 1	Heat Trace Panel	208/120V, 150A		BOP Enclosure
6Z-HTT-PPL-02	Heat Trace Panel 2	Heat Trace Panel	208/120V, 150A		Field
6Z-HTT-PPL-03	Heat Trace Panel 3	Heat Trace Panel	208/120V, 150A		Field
6Z-HTT-PPL-04	Heat Trace Panel 4	Heat Trace Panel	208/120V, 150A		Field
6Z-LVB-PPL-1233	Admin Building 480V Panel	Power Panel	480V, 100A		Admin Building
6Z-LVB-PPL-1234	Substation 480V Panel	Power Panel	480V, 100A		Substation
6Z-LVB-PPL-1231	BOP Enclosure 480V Panel	Power Panel	480V, 100A		BOP Enclosure
6Z-LVD-PPL-1232	BOP Enclosure 208/120V Panel	Power Panel	208/120V, 150A		BOP Enclosure
6Z-LVD-PPL-2211	EGR Enclosure 240/120V Panel	Power Panel	240/120V, 150A		EGR Enclosure

Appendix R

OSBL Electrical Load List

Kiewit

GE/SOUTHERN/LINDE ADVANCED NGCC INTEGRATION

ELECTRICAL LOAD LIST

Kiewit Engineering Group Inc.

REV	DATE	DESCRIPTION	ORIG	CHK	APPR
1	21-APR-2023	ISSUED FOR FEED	NJM	RMS	BRL
0	10-MAR-2023	ISSUED FOR FEED	NJM	HH	BRL
A	22-FEB-2023	ISSUED FOR REVIEW	NJM	HH	BRL

PROJECT	DOCUMENT NUMBER	REVISION
20041223	20041223-CA-ELE-001	1

KIEWIT ENGINEERING GROUP INC.

000000-EL-TMP-0001 v. 04

13.8KV SWITCHGEAR

GE/SOUTHERN/LINDE ADVANCED NGCC INTEGRATION

LOAD	TAG ID	HP	VOLTS	FL KW	FL KVA	FL AMPS	FL EFF.	FL P.F.	DEMAND	BREAKER SIZE	DEMAND HP	DEMAND KW	DEMAND KVA	DEMAND AMPS	COMMENTS	
50 KA	**6Z-MVA-SWG-1**															
LINDE LUMPED LOAD FEED A	(LATER)	44500	13200	36870.7	39016.6	1706.5	0.900	0.945	1.00	2000	44500.0	36870.7	39016.6	1640.9	LINDE PEAK LOAD	
LINDE LUMPED LOAD FEED B	(LATER)	44500	13200	36870.7	39016.6	1706.5	0.900	0.945	0.00	2000	0.0	0.0	0.0	0.0	LINDE PEAK LOAD	
CIRC WATER PUMP A	6Z-CWS-MPM-01A	5500	13200	4254.5	4654.8	203.6	0.964	0.914	1.00	1200	5500.0	4254.5	4654.8	195.8		
CIRC WATER PUMP B	6Z-CWS-MPM-01B	5500	13200	4254.5	4654.8	203.6	0.964	0.914	1.00	1200	5500.0	4254.5	4654.8	195.8		
CIRC WATER PUMP C	6Z-CWS-MPM-01C	5500	13200	4254.5	4654.8	203.6	0.964	0.914	0.00	1200	0.0	0.0	0.0	0.0		
4.16KV MCC/SWITCHGEAR 11	6Z-MVC-SWG-11		13800	2390.5	2924.5	122.4	1.000	0.817	1.00	1200		2390.5	2924.5	122.4		
13.8KV SWITCHGEAR 2	6Z-MVA-SWG-2		13800	4290.0	5113.2	213.9	1.000	0.848	1.00	1200		4336.0	5113.2	213.9		
480V SWITCHGEAR 12	6Z-LVB-SWG-12		13800	1831.8	2064.9	86.4	1.000	0.887	1.00	1200		1831.8	2064.9	86.4		
6Z-MVA-SWG-1 SUBTOTALS			13800									**53938**	**58682**	**2455**	**BUS PF**	**0.92**
		CONNECTED LOAD		95017.3	106282.1	4446.5										
50 KA	**6Z-MVA-SWG-2**															
4.16KV MCC/SWITCHGEAR 21	6Z-MVC-SWG-21		13800	2710.2	3196.0	133.7	1.000	0.848	1.00	1200		2710.2	3196.0	133.7		
480V SWITCHGEAR 22	6Z-LVB-SWG-22		13800	1579.7	1917.2	80.2	1.000	0.824	1.00	1200		1579.7	1917.2	80.2		
6Z-MVA-SWG-2 SUBTOTALS			13800									**4290**	**5113**	**214**	**BUS PF**	**0.84**
		CONNECTED LOAD		4290.0	5113.219	213.9										

4.16KV SWITCHGEAR

GE/SOUTHERN/LINDE ADVANCED NGCC INTEGRATION

LOAD	TAG ID	HP	VOLTS	FL KW	FL KVA	FL AMPS	FL EFF.	FL P.F.	DEMAND	BREAKER SIZE	DEMAND HP	DEMAND KW	DEMAND KVA	DEMAND AMPS	COMMENTS	
<50 KA	6Z-MVC-SWG-11 / 6Z-MVC-MCC-11															
COOLING TOWER FAN 1	6Z-CWS-MFN-01A	250	4000	199.0	242.3	35.0	0.937	0.821	1.00	400	250.0	199.0	242.3	33.6		
COOLING TOWER FAN 2	6Z-CWS-MFN-01B	250	4000	199.0	242.3	35.0	0.937	0.821	1.00	400	250.0	199.0	242.3	33.6		
COOLING TOWER FAN 3	6Z-CWS-MFN-01C	250	4000	199.0	242.3	35.0	0.937	0.821	1.00	400	250.0	199.0	242.3	33.6		
COOLING TOWER FAN 4	6Z-CWS-MFN-01D	250	4000	199.0	242.3	35.0	0.937	0.821	1.00	400	250.0	199.0	242.3	33.6		
COOLING TOWER FAN 5	6Z-CWS-MFN-01E	250	4000	199.0	242.3	35.0	0.937	0.821	1.00	400	250.0	199.0	242.3	33.6		
COOLING TOWER FAN 6	6Z-CWS-MFN-01F	250	4000	199.0	242.3	35.0	0.937	0.821	1.00	400	250.0	199.0	242.3	33.6		
COOLING TOWER FAN 7	6Z-CWS-MFN-01G	250	4000	199.0	242.3	35.0	0.937	0.821	1.00	400	250.0	199.0	242.3	33.6		
COOLING TOWER FAN 8	6Z-CWS-MFN-01H	250	4000	199.0	242.3	35.0	0.937	0.821	1.00	400	250.0	199.0	242.3	33.6		
COOLING TOWER FAN 9	6Z-CWS-MFN-01I	250	4000	199.0	242.3	35.0	0.937	0.821	1.00	400	250.0	199.0	242.3	33.6		
COOLING TOWER FAN 10	6Z-CWS-MFN-01J	250	4000	199.0	242.3	35.0	0.937	0.821	1.00	400	250.0	199.0	242.3	33.6		
AUX CIRC WATER PUMP	6Z-CWS-MPM-02	500	4000	400.9	501.1	72.3	0.930	0.800	1.00	400	500.0	400.9	501.1	69.6		
SPARE - PER CONTRACT			4160							1200						
6Z-MVC-SWG-11 / 6Z-MVC-MCC-11 SUBTOTALS			4160									2391	2925	406	BUS PF	0.82
		CONNECTED LOAD		2390.5	3041.503	422.1										
<50 KA	6Z-MVC-SWG-21															
DCC BLOWER #1 MOTOR		1750	4000	1355.1	1598.0	230.7	0.963	0.848	1.00	1200	1750.0	1355.1	1598.0	221.8		
DCC BLOWER #2 MOTOR		1750	4000	1355.1	1598.0	230.7	0.963	0.848	1.00	1200	1750.0	1355.1	1598.0	221.8		
SPARE - PER CONTRACT			4160							1200						
6Z-MVC-SWG-21 SUBTOTALS			4160									2710	3196	444	BUS PF	0.85
		CONNECTED LOAD		2710.2	3323.865	461.3										

000000-EL-TMP-0001 v. 04

LOW VOLTAGE SWITCHGEAR

GE/SOUTHERN/LINDE ADVANCED NGCC INTEGRATION

LOAD	TAG ID	HP	VOLTS	FL KW	FL KVA	FL AMPS	NEC 430.250 FLA	FL EFF.	FL P.F.	DEMAND	FRAME SIZE	BREAKER SIZE	DEMAND HP	DEMAND KW	DEMAND KVA	DEMAND AMPS	COMMENTS	
65 KA	6Z-LVB-SWG-12																	
480V MOTOR CONTROL CENTER 121	6Z-LVB-MCC-121		480	691.4	798.9	960.9		1.000	0.865	1.00	1600	1600		691.4	798.9	960.9		
480V MOTOR CONTROL CENTER 122	6Z-LVB-MCC-122		480	741.4	848.9	1021.0		1.000	0.873	1.00	1600	1600		741.4	848.9	1021.0		
480V MOTOR CONTROL CENTER 123	6Z-LVB-MCC-123		480	399.0	417.1	501.7		1.000	0.957	1.00	1600	1600		399.0	417.1	501.7		
SPARE - PER CONTRACT			480								800	800						
6Z-LVB-SWG-12 SUBTOTALS			480											1832	2065	2484	BUS PF	0.89
		CONNECTED LOAD		1831.8	2064.856	2483.6												
65 KA	6Z-LVB-SWG-22																	
480V MOTOR CONTROL CENTER 221	6Z-LVB-MCC-221		480	811.5	980.2	1179.0		1.000	0.828	1.00	1600	1600		811.5	980.2	1179.0		
480V MOTOR CONTROL CENTER 222	6Z-LVB-MCC-222		480	768.3	937.0	1127.0		1.000	0.820	1.00	1600	1600		768.3	937.0	1127.0		
SPARE - PER CONTRACT			480								800	800						
6Z-LVB-SWG-22 SUBTOTALS			480											1580	1917	2306	BUS PF	0.82
		CONNECTED LOAD		1579.7	1917.195	2306.0												

000000 EL TMP 0001 v. 04

LOW VOLTAGE MOTOR CONTROL CENTERS

GE/SOUTHERN/LINDE ADVANCED NGCC INTEGRATION

LOAD	TAG ID	MOTOR SPACE HTR REQUIRED	HP	VOLTS	FL KW	FL KVA	FL AMPS	NEC 430.250 FLA	FL EFF.	FL P.F.	TYPE	FRAME SIZE	BREAKER SIZE	SPACE	DEMAND	DEMAND KW	DEMAND KVA	DEMAND AMPS	COMMENTS
65 KA	6Z-LVB-MCC-121																		
BUS SIZE (AMPS) = 1600																			
UNIT 1 HRSG TIE-IN DAMPER SEAL AIR SKID	6A-FLG-SKD-01	YES	100	480	78.9	90.7	113.8	124.8	0.945	0.870	FVNR	4	-	4	1.00	78.9	90.7	113.8	
UNIT 1 CC TRAIN DAMPER SEAL AIR SKID	6A-FLG-SKD-02	YES	100	480	78.9	90.7	113.8	124.8	0.945	0.870	FVNR	4	-	4	1.00	78.9	90.7	113.8	
UNIT 1 CC TRAIN DAMPER	6A-DPR-FLG-190	NO	1	480	0.9	1.2	1.5	2.1	0.825	0.780	FVNR	1	-	2	1.00	0.9	1.2	1.5	
DEMINERALIZED WATER FORWARDING PUMP A	6Z-DWS-MPM-01A	NO	15	480	12.3	14.8	18.6	21.0	0.910	0.830	FVNR	2	-	2	1.00	12.3	14.8	18.6	
COOLING TOWER BLOWDOWN SODIUM BISULFITE FEED PUMP A	6Z-TCF-MPM-06A	NO	0.5	480	0.5	0.7	0.9	1.1	0.788	0.680	FVNR	1	-	2	1.00	0.5	0.7	0.9	
CORROSION INHIBITOR FEED PUMP A	6Z-TCF-MPM-02A	NO	0.5	480	0.5	0.7	0.9	1.1	0.788	0.680	FVNR	1	-	2	1.00	0.5	0.7	0.9	
SULFURIC ACID FEED PUMP A	6Z-TCF-MPM-03A	NO	0.5	480	0.5	0.7	0.9	1.1	0.788	0.680	FVNR	1	-	2	1.00	0.5	0.7	0.9	
SODIUM HYPOCHLORITE FEED PUMP A	6Z-TCF-MPM-04A	NO	0.5	480	0.5	0.7	0.9	1.1	0.788	0.680	FVNR	1	-	2	1.00	0.5	0.7	0.9	
COOLING TOWER CHEM FEED SUMP PUMP A	6Z-TCF-MPM-01A	NO	1	480	0.9	1.2	1.5	2.1	0.825	0.780	FVNR	1	-	2	1.00	0.9	1.2	1.5	
SCALE INHIBITOR FEED PUMP A	6Z-TCF-SKD-05A			480	0.5	0.6	0.7		0.900	0.850	Dual Btr	125	20	1	1.00	0.5	0.6	0.7	
SERVICE WATER PUMP A	6Z-SWS-MPM-01A	YES	150	480	117.7	135.3	169.9	168.8	0.950	0.870	FVNR	5	-	5	1.00	117.7	135.3	169.9	
POTABLE WATER PUMP A	6Z-PWS-MPM-01			480	0.5	0.6	0.7		0.900	0.850	Dual Btr	125	20	1	1.00	0.5	0.6	0.7	
AIR COMPRESSOR A	6Z-IA-CMP-01			480	122.0	143.5	172.6		0.900	0.850	BKR	250	225	3	1.00	122.0	143.5	172.6	
WASTE WATER SUMP PUMP	6Z-WW-MPM-01A			480	0.5	0.6	0.7		0.900	0.850	Dual Btr	125	20	1	1.00	0.5	0.6	0.7	
OIL/WATER SEPARATOR PUMP A	6Z-PDR-MPM-01A	NO	5	480	4.3	5.2	6.5	7.6	0.875	0.820	FVNR	1	-	2	1.00	4.3	5.2	6.5	
EGR UNIT 1 INLET DAMPER SEAL AIR SKID	01-EGR-SKD-03	YES	50	480	46.1	46.1	57.8	65.0	0.930	0.870	FVNR	3	-	3	1.00	46.1	46.1	57.8	
UNIT 1 VENT STACK DAMPER SEAL AIR SKID	01-EGR-SKD-04	YES	50	480	46.1	46.1	57.8	65.0	0.930	0.870	FVNR	3	-	3	1.00	46.1	46.1	57.8	
UNIT 1 VENT STACK DAMPER	01-EGR-DPR-02	NO	1	480	0.9	1.2	1.5	2.1	0.825	0.780	FVNR	1	-	2	1.00	0.9	1.2	1.5	
UNIT 1 GT TIE-IN DAMPER SEAL AIR SKID	01-EGR-SKD-05	YES	50	480	46.1	46.1	57.8	65.0	0.930	0.870	FVNR	3	-	3	1.00	46.1	46.1	57.8	
UNIT 1 GT TIE-IN DAMPER	01-EGR-DPR-03	NO	1	480	0.9	1.2	1.5	2.1	0.825	0.780	FVNR	1	-	2	1.00	0.9	1.2	1.5	
BATTERY CHARGER 1	6Z-LVE-CHG-1			480	150.0	150.0	180.4		1.000	1.000	BKR	250	250	3	1.00	150.0	150.0	180.4	
SPARE - PER CONTRACT				480							FVNR	2		2					
SPARE SIZE 1 STARTER				480							FVNR	1		2					
SPARE 20A BKR				480							Dual Btr	125	20	1					
SPARE 30A BKR				480							Dual Btr	125	30	1					
FUTURE 12" SPACE				480										2					
6Z-LVB-MCC-121 SUBTOTALS								NUMBER OF SECTIONS (W/O MAIN BREAKER)						6		691	799	961	BUS PF: 0.87
CONNECTED LOAD					691.4	798.9	960.9									PERCENT LOADED=		60.1%	PERCENT CONSTANT KVA: 69%

65 KA	6Z-LVB-MCC-122																		
BUS SIZE (AMPS) = 1600																			
UNIT 2 HRSG TIE-IN DAMPER SEAL AIR SKID	6B-FLG-SKD-01	YES	100	480	78.9	90.7	113.8	124.8	0.945	0.870	FVNR	4	-	4	1.00	78.9	90.7	113.8	
UNIT 2 CC TRAIN DAMPER SEAL AIR SKID	6B-FLG-SKD-02	YES	100	480	78.9	90.7	113.8	124.8	0.945	0.870	FVNR	4	-	4	1.00	78.9	90.7	113.8	
UNIT 2 CC TRAIN DAMPER	6A-DPR-FLG-290	NO	1	480	0.9	1.2	1.5	2.1	0.825	0.780	FVNR	1	-	2	1.00	0.9	1.2	1.5	
DEMINERALIZED WATER FORWARDING PUMP B	6Z-DWS-MPM-01B	NO	15	480	12.3	14.8	18.6	21.0	0.910	0.830	FVNR	2	-	2	1.00	12.3	14.8	18.6	
COOLING TOWER BLOWDOWN SODIUM BISULFITE FEED PUMP B	6Z-TCF-MPM-06B	NO	0.5	480	0.5	0.7	0.9	1.1	0.788	0.680	FVNR	1	-	2	1.00	0.5	0.7	0.9	
CORROSION INHIBITOR FEED PUMP B	6Z-TCF-MPM-02B	NO	0.5	480	0.5	0.7	0.9	1.1	0.788	0.680	FVNR	1	-	2	1.00	0.5	0.7	0.9	
SULFURIC ACID FEED PUMP B	6Z-TCF-MPM-03B	NO	0.5	480	0.5	0.7	0.9	1.1	0.788	0.680	FVNR	1	-	2	1.00	0.5	0.7	0.9	
SODIUM HYPOCHLORITE FEED PUMP B	6Z-TCF-MPM-04B	NO	0.5	480	0.5	0.7	0.9	1.1	0.788	0.680	FVNR	1	-	2	1.00	0.5	0.7	0.9	
COOLING TOWER CHEM FEED SUMP PUMP B	6Z-TCF-MPM-01B	NO	1	480	0.9	1.2	1.5	2.1	0.825	0.780	FVNR	1	-	2	1.00	0.9	1.2	1.5	
SCALE INHIBITOR FEED PUMP B	6Z-TCF-SKD-05B			480	0.5	0.6	0.7		0.900	0.850	Dual Btr	125	20	1	1.00	0.5	0.6	0.7	
SERVICE WATER PUMP B	6Z-SWS-MPM-01B	YES	150	480	117.7	135.3	169.9	168.8	0.950	0.870	FVNR	5	-	5	1.00	117.7	135.3	169.9	
POTABLE WATER PUMP B	6Z-PWS-MPM-02			480	0.5	0.6	0.7		0.900	0.850	Dual Btr	125	20	1	1.00	0.5	0.6	0.7	
AIR COMPRESSOR B	6Z-IA-CMP-02			480	122.0	143.5	172.6		0.900	0.850	BKR	250	225	3	1.00	122.0	143.5	172.6	
WASTE WATER SUMP PUMP	6Z-WW-MPM-01B			480	0.5	0.6	0.7		0.900	0.850	Dual Btr	125	20	1	1.00	0.5	0.6	0.7	
OIL/WATER SEPARATOR PUMP B	6Z-PDR-MPM-01B	NO	5	480	4.3	5.2	6.5	7.6	0.875	0.820	FVNR	1	-	2	1.00	4.3	5.2	6.5	
EGR UNIT 2 INLET DAMPER SEAL AIR SKID	02-EGR-SKD-03	YES	50	480	46.1	46.1	57.8	65.0	0.930	0.870	FVNR	3	-	3	1.00	46.1	46.1	57.8	
UNIT 2 VENT STACK DAMPER SEAL AIR SKID	02-EGR-SKD-04	YES	50	480	46.1	46.1	57.8	65.0	0.930	0.870	FVNR	3	-	3	1.00	46.1	46.1	57.8	
UNIT 2 VENT STACK DAMPER	02-EGR-DPR-02	NO	1	480	0.9	1.2	1.5	2.1	0.825	0.780	FVNR	1	-	2	1.00	0.9	1.2	1.5	
UNIT 2 GT TIE-IN DAMPER SEAL AIR SKID	02-EGR-SKD-05	YES	50	480	46.1	46.1	57.8	65.0	0.930	0.870	FVNR	3	-	3	1.00	46.1	46.1	57.8	
UNIT 2 GT TIE-IN DAMPER	02-EGR-DPR-03	NO	1	480	0.9	1.2	1.5	2.1	0.825	0.780	FVNR	1	-	2	1.00	0.9	1.2	1.5	
BATTERY CHARGER 2	6Z-LVE-CHG-2			480	150.0	150.0	180.4		1.000	1.000	BKR	250	250	3	1.00	150.0	150.0	180.4	
UPS BYPASS	6Z-LVF-KFR-1			480	50.0	50.0	60.1		1.000	1.000	Dual Btr	125	80	1	1.00	50.0	50.0	60.1	
SPARE - PER CONTRACT				480							FVNR	2		2					
SPARE SIZE 1 STARTER				480							FVNR	1		2					
SPARE 20A BKR				480							Dual Btr	125	20	1					
SPARE 30A BKR				480							Dual Btr	125	30	1					
FUTURE 12" SPACE				480										2					
6Z-LVB-MCC-122 SUBTOTALS								NUMBER OF SECTIONS (W/O MAIN BREAKER)						6		741	849	1021	BUS PF: 0.87
CONNECTED LOAD					741.4	848.9	1021.0									PERCENT LOADED=		63.8%	PERCENT CONSTANT KVA: 87%

000000-EL-TMP-0001 v. 04

GE/SOUTHERN/LINDE ADVANCED NGCC INTEGRATION

LOAD	TAG ID	MOTOR SPACE HTR REQUIRED?	HP	VOLTS	FL KW	FL KVA	FL AMPS	NEC 430.250 FLA	FL EFF.	FL P.F.	TYPE	FRAME SIZE	BREAKER SIZE	SPACE	DEMAND	DEMAND KW	DEMAND KVA	DEMAND AMPS	COMMENTS
65 KA	6Z-LVB-MCC-123																		
BUS SIZE (AMPS) = 1600																			
HEAT TRACE PANEL 1	6Z-HTT-PPL-01			480	54.0	54.0	65.0		1.000	1.000	Dual Ckr	125	100	1	0.80	43.2	43.2	52.0	COLOCATED 480V 208/120V TRANSFORMER
HEAT TRACE PANEL 2	6Z-HTT-PPL-02			480	54.0	54.0	65.0		1.000	1.000	Dual Ckr	125	100	1	0.80	43.2	43.2	52.0	COLOCATED 480V 208/120V TRANSFORMER
BOP ENCLOSURE 480V PANEL	6Z-LVB-PPL-1231			480	74.9	93.1	100.0		1.000	0.900	Dual Ckr	125	125	1	0.80	59.9	66.5	80.0	
BOP ENCLOSURE 208V/120V PANEL	6Z-LVD-PPL-1232			480	48.6	54.0	65.0		1.000	0.900	Dual Ckr	125	100	1	0.80	38.9	43.2	52.0	COLOCATED 480V 208/120V TRANSFORMER
SUBSTATION 480V PANEL	6Z-LVB-PPL-1234			480	74.9	93.1	100.0		1.000	0.900	Dual Ckr	125	125	1	0.80	59.9	66.5	80.0	
HEAT TRACE PANEL 3	6Z-HTT-PPL-03			480	54.0	54.0	65.0		1.000	1.000	Dual Ckr	125	100	1	0.80	43.2	43.2	52.0	COLOCATED 480V 208/120V TRANSFORMER
HEAT TRACE PANEL 4	6Z-HTT-PPL-04			480	54.0	54.0	65.0		1.000	1.000	Dual Ckr	125	100	1	0.80	43.2	43.2	52.0	COLOCATED 480V 208/120V TRANSFORMER
ADMIN BUILDING 480V PANEL	6Z-LVB-PPL-1233			480	83.1	83.1	100.0		1.000	1.000	Dual Ckr	125	125	1	0.80	66.5	66.5	80.0	
OIL/WATER SEPARATOR PUMP 2A	6Z-PDR-MPM-02A	NO	0.5	480	0.5	0.7	0.9	1.1	0.788	0.680	FVNR	1	-	2	1.00	0.5	0.7	0.9	
OIL/WATER SEPARATOR PUMP 2B	6Z-PDR-MPM-02B	NO	0.5	480	0.5	0.7	0.9	1.1	0.788	0.680	FVNR	1	-	2	1.00	0.5	0.7	0.9	
SPARE - PER CONTRACT				480							FVNR	2		2					
SPARE SIZE 1 STARTER				480							FVNR	1		2					
SPARE 20A BKR				480							Dual Ckr	125	20	1					
SPARE 30A BKR				480							Dual Ckr	125	30	1					
FUTURE 12" SPACE				480										2					
6Z-LVB-MCC-123 SUBTOTALS								NUMBER OF SECTIONS (W/O MAIN BREAKER)						3		336	417	502	BUS PF: 0.96
		CONNECTED LOAD			267.0	275.8	331.7									PERCENT LOADED= 31.4%			PERCENT CONSTANT KVA: 8%

LOAD	TAG ID	MOTOR SPACE HTR REQUIRED?	HP	VOLTS	FL KW	FL KVA	FL AMPS	NEC 430.250 FLA	FL EFF.	FL P.F.	TYPE	FRAME SIZE	BREAKER SIZE	SPACE	DEMAND	DEMAND KW	DEMAND KVA	DEMAND AMPS	COMMENTS
65 KA	6Z-LVB-MCC-221																		
BUS SIZE (AMPS) = 1600																			
SEAL AIR PUMP#1 MOTOR	(LATER)	NO	20	480	16.4	20.2	25.4	27.0	0.910	0.810	FVNR	2	-	2	1.00	16.4	20.2	25.4	
SEAL AIR PUMP#2 MOTOR	(LATER)	NO	20	480	16.4	20.2	25.4	27.0	0.910	0.810	FVNR	2	-	2	1.00	16.4	20.2	25.4	
SEAL AIR PUMP#3 MOTOR	(LATER)	NO	20	480	16.4	20.2	25.4	27.0	0.910	0.810	FVNR	2	-	2	1.00	16.4	20.2	25.4	
SEAL AIR PUMP#4 MOTOR	(LATER)	NO	20	480	16.4	20.2	25.4	27.0	0.910	0.810	FVNR	2	-	2	1.00	16.4	20.2	25.4	
SEAL AIR PUMP#5 MOTOR	(LATER)	NO	20	480	16.4	20.2	25.4	27.0	0.910	0.810	FVNR	2	-	2	1.00	16.4	20.2	25.4	
SEAL AIR PUMP#6 MOTOR	(LATER)	NO	20	480	16.4	20.2	25.4	27.0	0.910	0.810	FVNR	2	-	2	1.00	16.4	20.2	25.4	
DCC RECIRC WATER PUMP#1 MOTOR	(LATER)	YES	200	480	157.0	180.4	226.5	248.0	0.950	0.870	FVNR	5	-	5	1.00	157.0	180.4	226.5	
DCC RECIRC WATER PUMP#2 MOTOR	(LATER)	YES	200	480	157.0	180.4	226.5	248.0	0.950	0.870	FVNR	5	-	5	1.00	157.0	180.4	226.5	
DCC RECIRC WATER PUMP#3 MOTOR	(LATER)	YES	200	480	157.0	180.4	226.5	248.0	0.950	0.870	FVNR	5	-	5	1.00	157.0	180.4	226.5	
CARBON CAPTURE ISOLATION DAMPER #1 MOTOR	(LATER)	YES	75	480	59.4	69.9	87.8	96.0	0.941	0.850	FVNR	4	-	4	1.00	59.4	69.9	87.8	
CARBON CAPTURE ISOLATION DAMPER #2 MOTOR	(LATER)	YES	75	480	59.4	69.9	87.8	96.0	0.941	0.850	FVNR	4	-	4	1.00	59.4	69.9	87.8	
HRSG STACK ISOLATION DAMPER #2 Motor	(LATER)	YES	75	480	59.4	69.9	87.8	96.0	0.941	0.850	FVNR	4	-	4	1.00	59.4	69.9	87.8	
BLOWER SUCTION MOTOR DAMPER	(LATER)	NO	20	480	16.4	20.2	25.4	27.0	0.910	0.810	FVNR	2	-	2	1.00	16.4	20.2	25.4	
MAKEUP WATER VALVE MOTOR	(LATER)	NO	5	480	4.3	5.2	6.5	7.6	0.875	0.820	FVNR	1	-	2	1.00	4.3	5.2	6.5	
EQR 240/120V PANEL #1	6Z-LVD-PPL-2211			480	54.0	54.0	65.0		1.000	1.000	Dual Ckr	125	100	1	0.80	43.2	43.2	52.0	COLOCATED 480V 240/120V TRANSFORMER
SPARE - PER CONTRACT				480							FVNR	2		2					
SPARE SIZE 1 STARTER				480							FVNR	1		2					
SPARE 20A BKR				480							Dual Ckr	125	20	1					
SPARE 30A BKR				480							Dual Ckr	125	30	1					
FUTURE 12" SPACE				480										2					
6Z-LVB-MCC-221 SUBTOTALS								NUMBER OF SECTIONS (W/O MAIN BREAKER)						5		611	993	1179	BUS PF: 0.83
		CONNECTED LOAD			756.7	906.6	1090.4									PERCENT LOADED= 73.7%			PERCENT CONSTANT KVA: 83%

LOAD	TAG ID	MOTOR SPACE HTR REQUIRED?	HP	VOLTS	FL KW	FL KVA	FL AMPS	NEC 430.250 FLA	FL EFF.	FL P.F.	TYPE	FRAME SIZE	BREAKER SIZE	SPACE	DEMAND	DEMAND KW	DEMAND KVA	DEMAND AMPS	COMMENTS
65 KA	6Z-LVB-MCC-222																		
BUS SIZE (AMPS) = 1600																			
SEAL AIR PUMP#1 MOTOR	(LATER)	NO	20	480	16.4	20.2	25.4	27.0	0.910	0.810	FVNR	2	-	2	1.00	16.4	20.2	25.4	
SEAL AIR PUMP#2 MOTOR	(LATER)	NO	20	480	16.4	20.2	25.4	27.0	0.910	0.810	FVNR	2	-	2	1.00	16.4	20.2	25.4	
SEAL AIR PUMP#3 MOTOR	(LATER)	NO	20	480	16.4	20.2	25.4	27.0	0.910	0.810	FVNR	2	-	2	1.00	16.4	20.2	25.4	
SEAL AIR PUMP#4 MOTOR	(LATER)	NO	20	480	16.4	20.2	25.4	27.0	0.910	0.810	FVNR	2	-	2	1.00	16.4	20.2	25.4	
SEAL AIR PUMP#5 MOTOR	(LATER)	NO	20	480	16.4	20.2	25.4	27.0	0.910	0.810	FVNR	2	-	2	1.00	16.4	20.2	25.4	
SEAL AIR PUMP#6 MOTOR	(LATER)	NO	20	480	16.4	20.2	25.4	27.0	0.910	0.810	FVNR	2	-	2	1.00	16.4	20.2	25.4	
DCC RECIRC WATER PUMP#1 MOTOR	(LATER)	YES	200	480	157.0	180.4	226.5	248.0	0.950	0.870	FVNR	5	-	5	1.00	157.0	180.4	226.5	
DCC RECIRC WATER PUMP#2 MOTOR	(LATER)	YES	200	480	157.0	180.4	226.5	248.0	0.950	0.870	FVNR	5	-	5	1.00	157.0	180.4	226.5	
DCC RECIRC WATER PUMP#3 MOTOR	(LATER)	YES	200	480	157.0	180.4	226.5	248.0	0.950	0.870	FVNR	5	-	5	1.00	157.0	180.4	226.5	
CARBON CAPTURE ISOLATION DAMPER #1 MOTOR	(LATER)	YES	75	480	59.4	69.9	87.8	96.0	0.941	0.850	FVNR	4	-	4	1.00	59.4	69.9	87.8	
CARBON CAPTURE ISOLATION DAMPER #2 MOTOR	(LATER)	YES	75	480	59.4	69.9	87.8	96.0	0.941	0.850	FVNR	4	-	4	1.00	59.4	69.9	87.8	
HRSG STACK ISOLATION DAMPER #2 Motor	(LATER)	YES	75	480	59.4	69.9	87.8	96.0	0.941	0.850	FVNR	4	-	4	1.00	59.4	69.9	87.8	
BLOWER SUCTION MOTOR DAMPER	(LATER)	NO	20	480	16.4	20.2	25.4	27.0	0.910	0.810	FVNR	2	-	2	1.00	16.4	20.2	25.4	
MAKEUP WATER VALVE MOTOR	(LATER)	NO	5	480	4.3	5.2	6.5	7.6	0.875	0.820	FVNR	1	-	2	1.00	4.3	5.2	6.5	
SPARE - PER CONTRACT				480							FVNR	2		2					
SPARE SIZE 1 STARTER				480							FVNR	1		2					
SPARE 20A BKR				480							Dual Ckr	125	20	1					
SPARE 30A BKR				480							Dual Ckr	125	30	1					
FUTURE 12" SPACE				480										2					
6Z-LVB-MCC-222 SUBTOTALS								NUMBER OF SECTIONS (W/O MAIN BREAKER)						5		769	937	1127	BUS PF: 0.82
		CONNECTED LOAD			702.7	852.5	1025.4									PERCENT LOADED= 70.4%			PERCENT CONSTANT KVA: 87%

Appendix S

OSBL Electrical Engineering Standards and Symbols

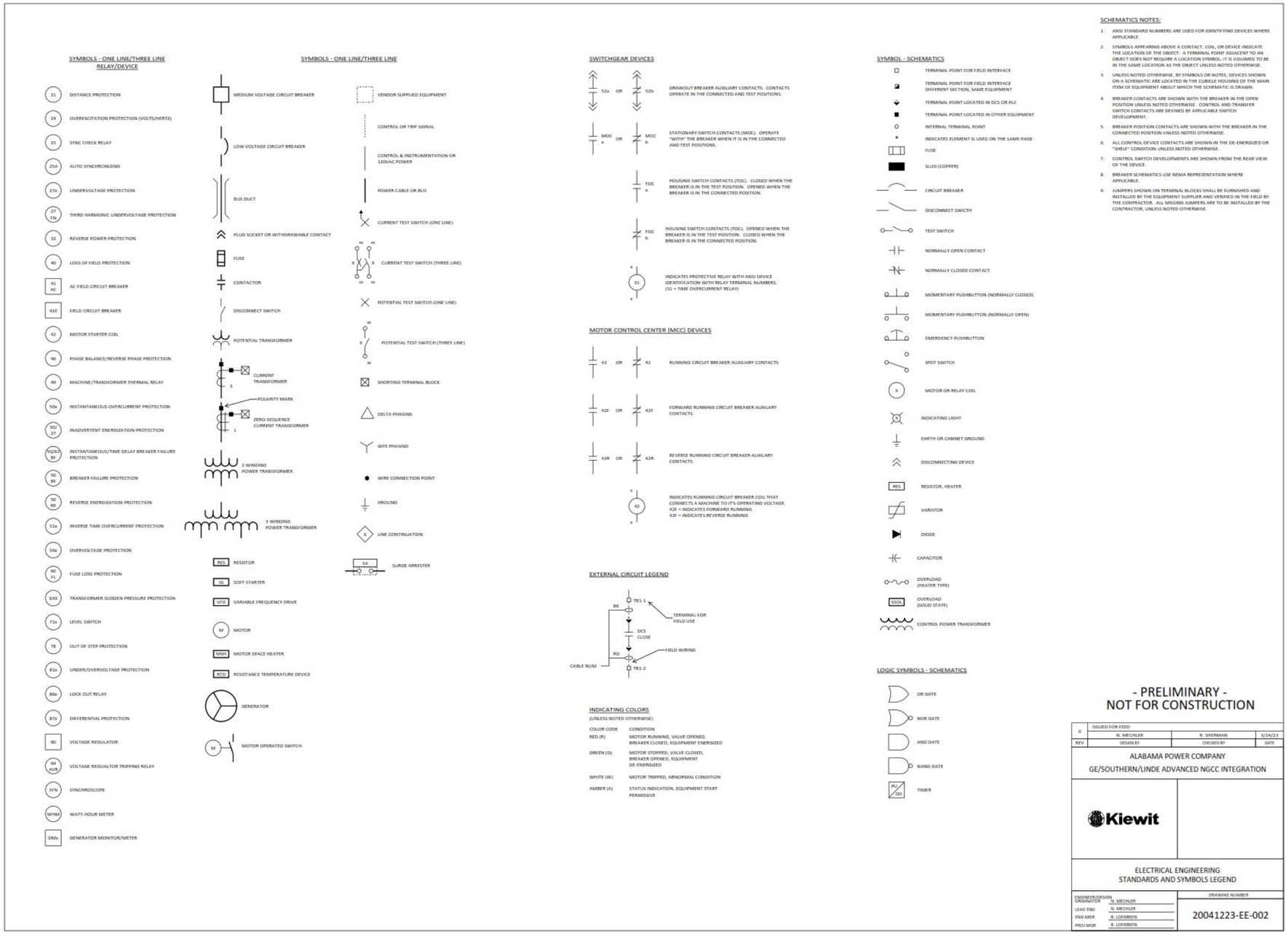
SYMBOLS - ONE LINE/THREE LINE
RELAY/DEVICE
21 DISTANCE PROTECTION
24 OVEREXCITATION PROTECTION (VOLTS/HERTZ)
25 SYNC CHECK RELAY
25A AUTO SYNCHRONIZING
27x UNDERVOLTAGE PROTECTION
27 TN THIRD HARMONIC UNDERVOLTAGE PROTECTION
32 REVERSE POWER PROTECTION
40 LOSS OF FIELD PROTECTION
41 AC AC FIELD CIRCUIT BREAKER
41E FIELD CIRCUIT BREAKER
42 MOTOR STARTER COIL
46 PHASE BALANCE/REVERSE PHASE PROTECTION
49 MACHINE/TRANSFORMER THERMAL RELAY
50x INSTANTANEOUS OVERCURRENT PROTECTION
50/27 INADVERTENT ENERGIZATION PROTECTION
50/62 BF INSTANTANEOUS/TIME DELAY BREAKER FAILURE PROTECTION
50 BF BREAKER FAILURE PROTECTION
50 RE REVERSE ENERGIZATION PROTECTION
51x INVERSE TIME OVERCURRENT PROTECTION
59x OVERVOLTAGE PROTECTION
60 FL FUSE LOSS PROTECTION
63X TRANSFORMER SUDDEN PRESSURE PROTECTION
71x LEVEL SWITCH
78 OUT OF STEP PROTECTION
81x UNDER/OVERVOLTAGE PROTECTION
86x LOCK OUT RELAY
87x DIFFERENTIAL PROTECTION
90 VOLTAGE REGULATOR
90 AVR VOLTAGE REGULATOR TRIPPING RELAY
SYN SYNCHROSCOPE
WHM WATT-HOUR METER
DMx GENERATOR MONITOR/METER
SYMBOLS - ONE LINE/THREE LINE
MEDIUM VOLTAGE CIRCUIT BREAKER
LOW VOLTAGE CIRCUIT BREAKER
BUS DUCT
PLUG SOCKET OR WITHDRAWABLE CONTACT
FUSE
CONTACTOR
DISCONNECT SWITCH
POTENTIAL TRANSFORMER
CURRENT TRANSFORMER
POLARITY MARK
ZERO-SEQUENCE CURRENT TRANSFORMER
2 WINDING POWER TRANSFORMER
3 WINDING POWER TRANSFORMER
RES RESISTOR
SS SOFT STARTER
VFD VARIABLE FREQUENCY DRIVE
M MOTOR
MSH MOTOR SPACE HEATER
RTD RESISTANCE TEMPERATURE DEVICE
GENERATOR
MOTOR OPERATED SWITCH
VENDOR SUPPLIED EQUIPMENT
CONTROL OR TRIP SIGNAL
CONTROL & INSTRUMENTATION OR 120VAC POWER
POWER CABLE OR BUS
CURRENT TEST SWITCH (ONE LINE)
CURRENT TEST SWITCH (THREE LINE)
POTENTIAL TEST SWITCH (ONE LINE)
POTENTIAL TEST SWITCH (THREE LINE)
SHORTING TERMINAL BLOCK
DELTA PHASING
WYE PHASING
WIRE CONNECTION POINT
GROUND
LINE CONTINUATION
SA SURGE ARRESTER
SWITCHGEAR DEVICES
52a OR 52b DRAWOUT BREAKER AUXILIARY CONTACTS. CONTACTS OPERATE IN THE CONNECTED AND TEST POSITIONS.
MOC a OR MOC b STATIONARY SWITCH CONTACTS (MOC). OPERATE "WITH" THE BREAKER WHEN IT IS IN THE CONNECTED AND TEST POSITIONS.
TOC a HOUSING SWITCH CONTACTS (TOC). CLOSED WHEN THE BREAKER IS IN THE TEST POSITION. OPENED WHEN THE BREAKER IS IN THE CONNECTED POSITION.
TOC b HOUSING SWITCH CONTACTS (TOC). OPENED WHEN THE BREAKER IS IN THE TEST POSITION. CLOSED WHEN THE BREAKER IS IN THE CONNECTED POSITION.
51 INDICATES PROTECTIVE RELAY WITH ANSI DEVICE IDENTIFICATION WITH RELAY TERMINAL NUMBERS. (51 = TIME OVERCURRENT RELAY)
MOTOR CONTROL CENTER (MCC) DEVICES
42 OR 42 RUNNING CIRCUIT BREAKER AUXILIARY CONTACTS
42F OR 42F FORWARD RUNNING CIRCUIT BREAKER AUXILIARY CONTACTS.
42R OR 42R REVERSE RUNNING CIRCUIT BREAKER AUXILIARY CONTACTS.
42 INDICATES RUNNING CIRCUIT BREAKER COIL THAT CONNECTS A MACHINE TO IT'S OPERATING VOLTAGE. 42F = INDICATES FORWARD RUNNING 42R = INDICATES REVERSE RUNNING
EXTERNAL CIRCUIT LEGEND
TB1-1
RK
TERMINAL FOR FIELD USE
DCS CLOSE
FIELD WIRING
RD
CABLE NUM
TB1-2
INDICATING COLORS
(UNLESS NOTED OTHERWISE)
COLOR CODE CONDITION
RED (R) MOTOR RUNNING, VALVE OPENED, BREAKER CLOSED, EQUIPMENT ENERGIZED
GREEN (G) MOTOR STOPPED, VALVE CLOSED, BREAKER OPENED, EQUIPMENT DE-ENERGIZED
WHITE (W) MOTOR TRIPPED, ABNORMAL CONDITION
AMBER (A) STATUS INDICATION, EQUIPMENT START PERMISSIVE
SYMBOL - SCHEMATICS
TERMINAL POINT FOR FIELD INTERFACE
TERMINAL POINT FOR FIELD INTERFACE DIFFERENT SECTION, SAME EQUIPMENT
TERMINAL POINT LOCATED IN DCS OR PLC
TERMINAL POINT LOCATED IN OTHER EQUIPMENT
INTERNAL TERMINAL POINT
INDICATES ELEMENT IS USED ON THE SAME PAGE
FUSE
SLUG (COPPER)
CIRCUIT BREAKER
DISCONNECT SWITCH
TEST SWITCH
NORMALLY OPEN CONTACT
NORMALLY CLOSED CONTACT
MOMENTARY PUSHBUTTON (NORMALLY CLOSED)
MOMENTARY PUSHBUTTON (NORMALLY OPEN)
EMERGENCY PUSHBUTTON
SPDT SWITCH
X MOTOR OR RELAY COIL
INDICATING LIGHT
EARTH OR CABINET GROUND
DISCONNECTING DEVICE
RES RESISTOR, HEATER
VARISTOR
DIODE
CAPACITOR
OVERLOAD (HEATER TYPE)
SSOL OVERLOAD (SOLID STATE)
CONTROL POWER TRANSFORMER
LOGIC SYMBOLS - SCHEMATICS
OR GATE
NOR GATE
AND GATE
NAND GATE
PU DO TIMER
SCHEMATICS NOTES:
1. ANSI STANDARD NUMBERS ARE USED FOR IDENTIFYING DEVICES WHERE APPLICABLE.
2. SYMBOLS APPEARING ABOVE A CONTACT, COIL, OR DEVICE INDICATE THE LOCATION OF THE OBJECT. A TERMINAL POINT ADJACENT TO AN OBJECT DOES NOT REQUIRE A LOCATION SYMBOL; IT IS ASSUMED TO BE IN THE SAME LOCATION AS THE OBJECT UNLESS NOTED OTHERWISE.
3. UNLESS NOTED OTHERWISE, BY SYMBOLS OR NOTES, DEVICES SHOWN ON A SCHEMATIC ARE LOCATED IN THE CUBICLE HOUSING OF THE MAIN ITEM OF EQUIPMENT ABOUT WHICH THE SCHEMATIC IS DRAWN.
4. BREAKER CONTACTS ARE SHOWN WITH THE BREAKER IN THE OPEN POSITION UNLESS NOTED OTHERWISE. CONTROL AND TRANSFER SWITCH CONTACTS ARE DEFINED BY APPLICABLE SWITCH DEVELOPMENT.
5. BREAKER POSITION CONTACTS ARE SHOWN WITH THE BREAKER IN THE CONNECTED POSITION UNLESS NOTED OTHERWISE.
6. ALL CONTROL DEVICE CONTACTS ARE SHOWN IN THE DE-ENERGIZED OR "RESET" CONDITION UNLESS NOTED OTHERWISE.
7. CONTROL SWITCH DEVELOPMENTS ARE SHOWN FROM THE REAR VIEW OF THE DEVICE.
8. BREAKER SCHEMATICS USE NEMA REPRESENTATION WHERE APPLICABLE.
9. JUMPERS SHOWN ON TERMINAL BLOCKS SHALL BE FURNISHED AND INSTALLED BY THE EQUIPMENT SUPPLIER AND VERIFIED IN THE FIELD BY THE CONTRACTOR. ALL MISSING JUMPERS ARE TO BE INSTALLED BY THE CONTRACTOR, UNLESS NOTED OTHERWISE.
- PRELIMINARY -
NOT FOR CONSTRUCTION
D ISSUED FOR FEED N. MECHLER R. SHERMAN 3/14/23
REV DESIGN BY CHECKED BY DATE
ALABAMA POWER COMPANY
GE/SOUTHERN/LINDE ADVANCED NGCC INTEGRATION
Kiewit
ELECTRICAL ENGINEERING
STANDARDS AND SYMBOLS LEGEND
ENGINEER/DESIGN ORIGINATOR N. MECHLER
LEAD ENG N. MECHLER
ENG MGR B. LOFGREEN
PROJ MGR B. LOFGREEN
DRAWING NUMBER
20041223-EE-002

Appendix T

OSBL 230-13.8 kV Substation One-Line Diagram

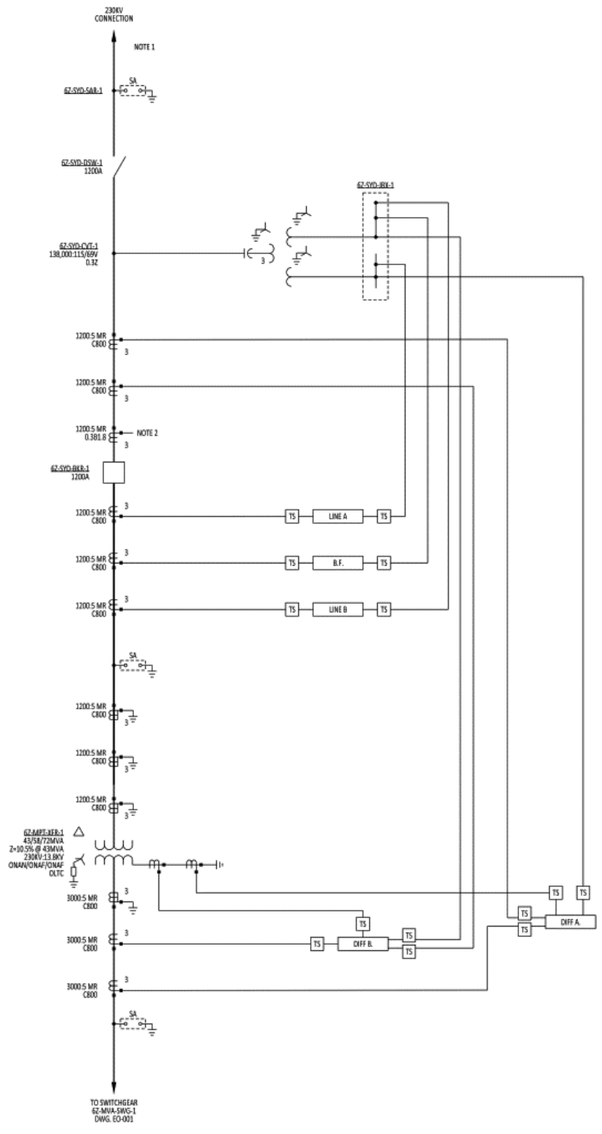

NOTES:

1. POINT OF INTERCONNECTION AT EXISTING 230KV TRANSMISSION LINE.
2. METERING REQUIREMENTS TO BE DETERMINED DURING DETAILED DESIGN.

REFERENCE DRAWINGS:

1. 20041223-PDS-500 GENERAL ARRANGEMENT
2. 20041223-EO-001 OVERALL ONE LINE

- PRELIMINARY -
NOT FOR CONSTRUCTION

REV.			
0	ISSUED FOR FEED		
	K.YN	M. MCKNIGHT	04-28-23
	DESIGN BY	CHECKED BY	DATE

GE/SOUTHERN/LINDE

GE/SOUTHERN/LINDE ADVANCED NGCC INTEGRATION

Kiewit

230/13.8KV
SUBSTATION ONE
LINE DIAGRAM

ENGINEER/DESIGN ORIGINATOR	K. YN
LEAD ENG	N. MECHLER
ENG MGR	B. LOFGREEN
PROJ MGR	B. LOFGREEN

DRAWING NUMBER

20041223-PDS-001

Appendix U

OSBL 125 VDC Electrical One-Line Diagram

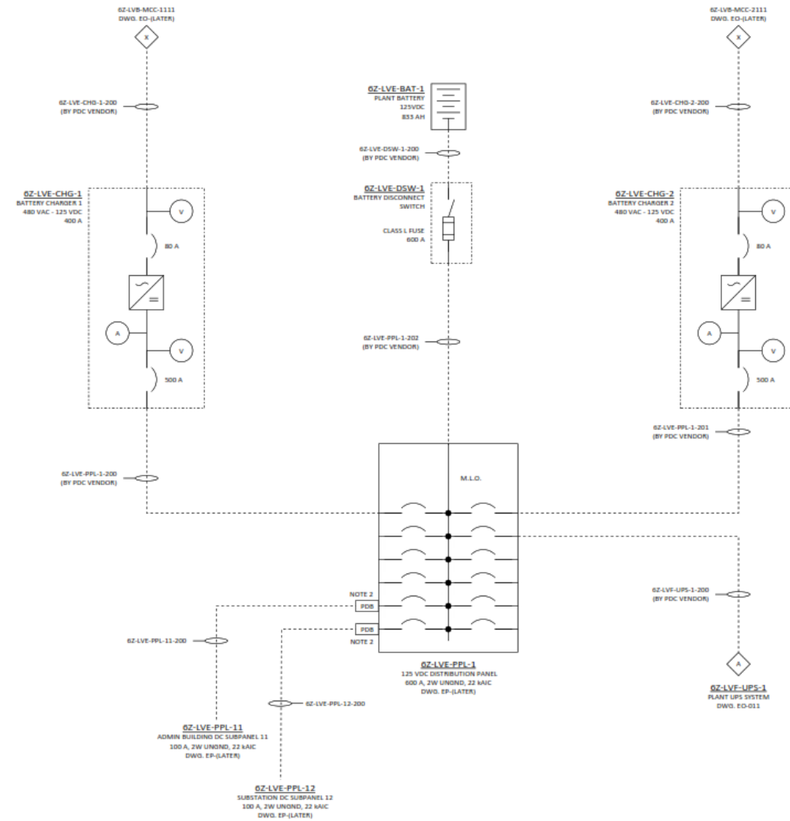

NOTES:

1. BREAKER RATINGS AND ADDITIONAL LOADS ARE LOCATED ON THE PANELBOARD DRAWINGS (LATER).
2. POWER DISTRIBUTION BLOCKS ARE LOCATED IN THE TOP SECTION OF SECTION 2 TO ACCOMODATE LUG REQUIREMENTS OF INCOMING CABLES.

REFERENCE DRAWINGS:

EE-002	ELECTRICAL ENGINEERING STANDARDS AND SYMBOLS LEGEND
EO-011	ELECTRICAL ONE LINE DIAGRAM PLANT UPS SYSTEM

LEGEND:

M.L.O.	MAIN LUG ONLY
PDB	POWER DISTRIBUTION BLOCK
A	DC AMMETER
V	DC VOLTMETER

- PRELIMINARY -
NOT FOR CONSTRUCTION

REV	DESIGN BY	CHECKED BY	DATE
A	ISSUED FOR REVIEW		
	N. MECHLER	K. SHERMAN	3/10/23

GE/SOUTHERN/LINDE

GE/SOUTHERN/LINDE ADVANCED NGCC INTEGRATION

Kiewit

ELECTRICAL ONE LINE DIAGRAM
PLANT 125 VDC SYSTEM

ENGINEER/DESIGN ORIGINATOR	N. MECHLER
LEAD ENG	N. MECHLER
ENG MGR	B. LOFGREEN
PROJ MGR	B. LOFGREEN

DRAWING NUMBER: 20041223-EO-010

Appendix V

OSBL Plant UPS Electrical One-Line Diagram

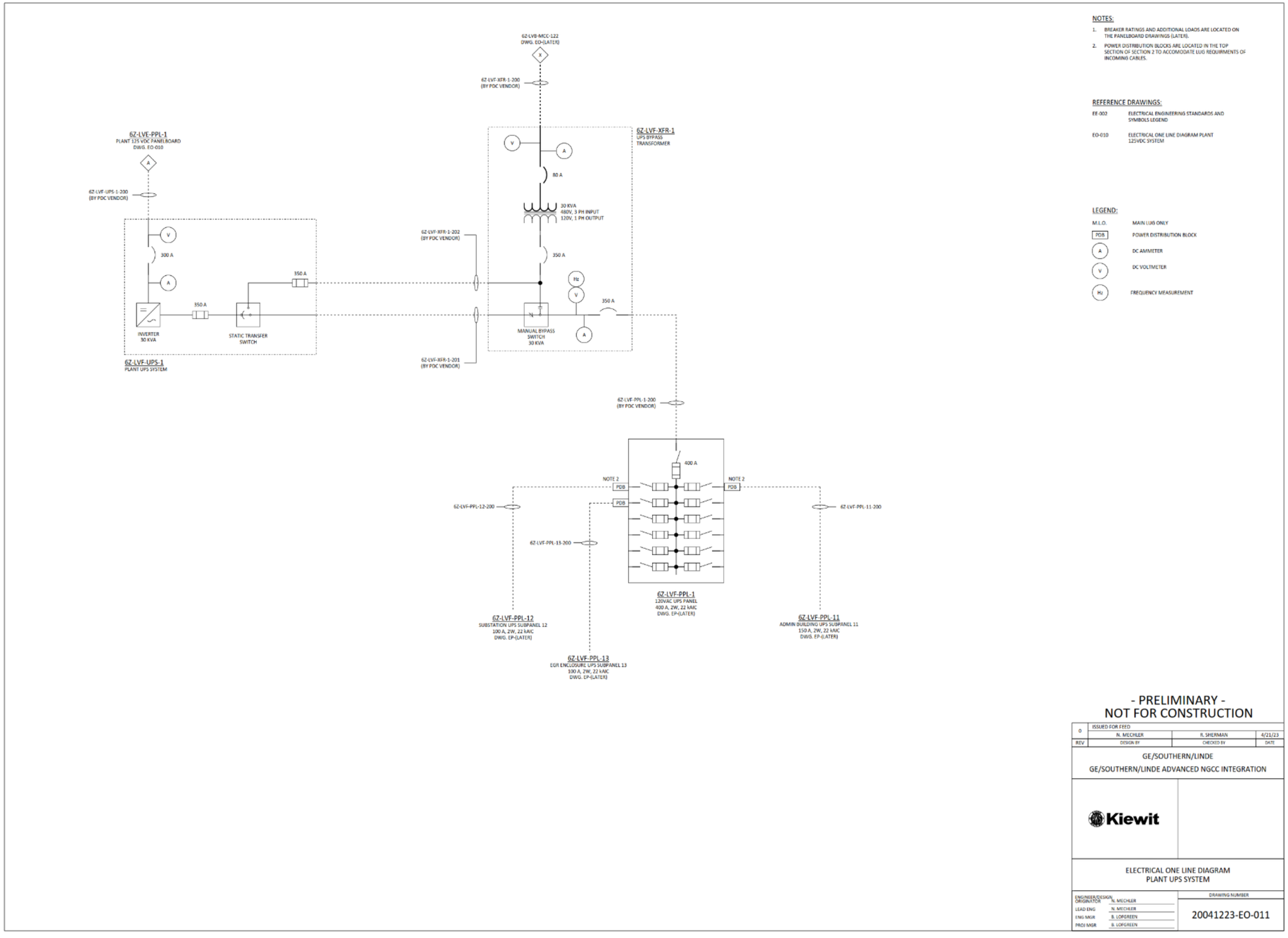

NOTES:

1. BREAKER RATINGS AND ADDITIONAL LOADS ARE LOCATED ON THE PANELBOARD DRAWINGS (LATER).
2. POWER DISTRIBUTION BLOCKS ARE LOCATED IN THE TOP SECTION OF SECTION 2 TO ACCOMODATE LUG REQUIRMENTS OF INCOMING CABLES.

REFERENCE DRAWINGS:

EE-002	ELECTRICAL ENGINEERING STANDARDS AND SYMBOLS LEGEND
EO-010	ELECTRICAL ONE LINE DIAGRAM PLANT 125VDC SYSTEM

LEGEND:

M.L.O.	MAIN LUG ONLY
PDB	POWER DISTRIBUTION BLOCK
A	DC AMMETER
V	DC VOLTMETER
Hz	FREQUENCY MEASUREMENT

- PRELIMINARY -
NOT FOR CONSTRUCTION

REV	DESIGN BY	CHECKED BY	DATE
0	ISSUED FOR FEED		
	N. MECHLER	R. SHERMAN	4/21/23

GE/SOUTHERN/LINDE

GE/SOUTHERN/LINDE ADVANCED NGCC INTEGRATION

Kiewit

ELECTRICAL ONE LINE DIAGRAM
PLANT UPS SYSTEM

ENGINEER/DESIGN ORIGINATOR	N. MECHLER
LEAD ENG	N. MECHLER
ENG MGR	B. LOFGREEN
PROJ MGR	B. LOFGREEN

DRAWING NUMBER

20041223-EO-011

Appendix W

OSBL Electrical System Analysis

GE/SOUTHERN/LINDE ADVANCED NGCC INTEGRATION
SYSTEM ANALYSIS

REV	DATE	DESCRIPTION	ORIG	CHK	APPR
0	21-APR-2023	ISSUED FOR FEED	NJM	RMS	BRL
A	10-MAR-2023	ISSUED FOR REVIEW	NJM	HH	BRL

PROJECT	DOCUMENT NUMBER	REVISION
20041223	20041223-CA-ELE-002	0

KIEWIT ENGINEERING GROUP INC. | GANOTEC INC

CALCULATION SHEET

PROJECT: GE/Southern/Linde Advanced NGCC Integration
JOB NUMBER: 20041223

CALC NO CA-ELE-002

SUBJECT ELECTRICAL SYSTEMS ANALYSIS **SHEET NO** 1

BY Nick Mechler **DATE** 4/21/2023 **SHEET REV** 0

Table of Contents

SECTION	DESCRIPTION	SHEET
1.0	OBJECTIVE	2
2.0	CRITERIA	2
3.0	DESIGN BASIS	4
4.0	METHODS AND EQUATIONS	5
5.0	CONFIGURATIONS	6
6.0	SCENARIOS	10
7.0	RESULTS	11
8.0	CONCLUSIONS	14
9.0	REFERENCES	15

APPENDICES

A.	OVERALL ONE-LINE DIAGRAM
B.	PROJECT LOAD LIST
C.	MOTOR LOADING DATA
D.	UTILITY FAULT INFORMATION
E.	LOAD FLOW STUDY REPORTS
F.	SHORT CIRCUIT STUDY REPORTS
G.	MOTOR STARTING STUDY REPORTS

CALCULATION SHEET

PROJECT: GE/Southern/Linde Advanced NGCC Integration
JOB NUMBER: 20041223

CALC NO CA-ELE-002

SUBJECT ELECTRICAL SYSTEMS ANALYSIS **SHEET NO** 2

BY Nick Mechler **DATE** OPEN **SHEET REV** 0

1.0 OBJECTIVE

1.1 The objective of this calculation is to verify the designed electrical power distribution system will perform properly and safely under normal and abnormal plant conditions.

2.0 CRITERIA

2.1 Load Flow, Short Circuit, and Motor Starting calculations will be performed to show the system operates within the specified constraints and all equipment operates within equipment ratings.

2.2 LOAD FLOW:

2.2.1 The load flow study shall show operating voltages and operating currents of all equipment fall within the manufacturer's equipment design ratings and voltage requirements specified by NEMA C84.1-2016. Different operating scenarios will be defined to verify all equipment operates within manufacturer's equipment ratings.

2.2.2 A load flow scenario is made up of three major items: Configuration, Source Voltage, and Loading. The load flow portion of the study will vary any or all of the above listed items to ensure all of the listed design criteria are met.

2.2.3 Operating scenarios will fall into two categories defined as follows:

2.2.3.1 Normal Scenario: IEEE 399 defines normal cases as "the base cases should represent realistic operating conditions". For the purposes of this study, KED defines the normal scenario as any condition operating under non contingency condition (normal loading, 100% source voltage, and normal configuration), or under a contingency condition with one variant (any one of loading, voltage or configuration varied from normal).

2.2.3.2 Abnormal Scenario: IEEE 399 defines abnormal cases as including the following "loss of transmission line or cable, loss of transformer, loss of generator, abnormal supply conditions". KED defines the abnormal scenario as any contingency condition with two or more variants (any two or more of loading, voltage, or configuration varied from normal).

2.2.4 For all steady state normal operating conditions the design voltage range for all equipment shall be maintained within Range A of NEMA C84.1-2016 Voltage Limits (Table 1 below). For all abnormal operating conditions the design voltage range for equipment shall be maintained within Range B of Table 1. At any given time during load flow, all motor

CALCULATION SHEET

PROJECT: GE/Southern/Linde Advanced NGCC Integration
JOB NUMBER: 20041223

CALC NO CA-ELE-002
SUBJECT ELECTRICAL SYSTEMS ANALYSIS **SHEET NO** 3
BY Nick Mechler **DATE** OPEN **SHEET REV** 0

terminal voltages shall be maintained above 90% and below 110% of nominal terminal voltage.

TABLE 1: NEMA C84.1-2016 VOLTAGE LIMITS

Nominal Voltage	Range A (Normal)			Range B (Abnormal)		
	Minimum (Service)	Minimum (Utilization)	Maximum (Service/ Utilization)	Minimum (Service)	Minimum (Utilization)	Maximum (Service/ Utilization)
120	114 (95%)	108 (90%)	126 (105%)	110 (91.7%)	104 (86.7%)	127 (105.8%)
208	197 (94.7%)	187 (89.9%)	218 (104.8%)	191 (91.8%)	180 (86.5%)	220 (105.8%)
240	228 (95%)	216 (90%)	252 (105%)	220 (91.7%)	208 (86.7%)	254 (105.8%)
480	456 (95%)	432 (90%)	504 (105%)	440 (91.7%)	416 (86.7%)	508 (105.8%)
4160	4050 (97.4%)	3740 (89.9%)	4370 (105.0%)	3950 (95%)	3600 (86.5%)	4400 (105.8%)
6900	6730 (97.5%)	6210 (90%)	7240 (104.9%)	6560 (95.1%)	5940 (86.1%)	7260 (105.2%)
13800	13460 (97.5%)	12420 (90%)	14490 (105%)	13110 (95%)	11880 (86.1%)	14520 (105.2%)
34500	33640 (97.5%)	N/A	36230 (105%)	32780 (95%)	N/A	36510 (105.8%)

2.3 SHORT CIRCUIT:

2.3.1 System short circuit studies shall establish equipment ratings at each voltage level. Calculation of fault currents necessary for determination of 4.16 kV and 34.5 kV switchgear ratings shall be in accordance with ANSI C37.010, Application Guide for AC High-Voltage Circuit Breakers. The short circuit study shall show all short circuit currents fall within the manufacturer's bus withstand ratings.

2.3.2 A short circuit scenario is made up of three major items: Configuration, Source Voltage, and Loading. The short circuit portion of the study will vary the configuration and source voltage to confirm the system meets the design criteria above. Loading will be set to its heavily loaded level to allow for max short circuit contribution from motors (heavily loading is defined in section 4.5 of this report).

2.4 MOTOR STARTING:

2.4.1 The motor starting study ensures the system will have the ability to start the largest motor when all other motors are running without any adverse effects on the system. Motor starting shall show all equipment voltages will operate within desired voltages as specified in IEEE 399 Table 9-1: "Summary of Representative Critical System Voltage Levels when Starting

CALCULATION SHEET

PROJECT: GE/Southern/Linde Advanced NGCC Integration
JOB NUMBER: 20041223

CALC NO CA-ELE-002
SUBJECT ELECTRICAL SYSTEMS ANALYSIS **SHEET NO** 4
BY Nick Mechler **DATE** OPEN **SHEET REV** 0

Motors". Table 2 below is Table 9-1 from IEEE Std. 399-1997.

TABLE 2: SUMMARY OF REPRESENTATIVE CRITICAL SYSTEM VOLTAGE LEVELS WHEN STARTING MOTORS

Voltage Drop Location or Problem	Minimum Allowable Voltage (% Rated)
At Terminal of Starting Motor	80%[a]
All Terminals of other Motors that must Reaccelerate	71%[a]
AC Contactor Pick-Up (by standard) (see 9.8, NEMA standards)	85%
DC Contactor Pick-Up (by standard) (see 9.8, NEMA standards)	80%
Contactor Hold-in (average of those in use)	60-70%[b]
Solid-State Control Devices	90%[c]
Noticeable Light Flicker	3% Change
NOTE – More detailed information is provided in Table 51 of IEEE Std. 242-1989 [a]Typical for NEMA design B motors only. Value may be higher (or lower) depending on actual motor and load characteristics [b]Value may be as high as 80% for certain conditions during prolonged starting intervals [c]May typically vary by ±5% depending on available tap settings of power supply transformer when provided	

2.4.2 A motor starting scenario is made up of four major items: Configuration, Source Voltage, Loading, and starting motor. The motor starting portion of the study will vary the configuration, source voltage, loading, and starting motor to confirm the system meets the design criteria above.

2.5 The studies described above shall be the basis for establishing the continuous rating, transformation ratio, and impedance for transformers in the power supply system to be furnished.

2.6 All motor starting studies use the static motor starting model. Static motor starting calculates the locked rotor condition for the instant the motor is started. This represents the worst case scenario for starting one motor at a time.

3.0 DESIGN BASIS

3.1 The ETAP input data originated from the GE/Southern/Linde overall one-line diagram and load list as shown in Appendix A and B respectively. Any future alterations to the system configuration and design as shown in this calculation should be verified in ETAP for system safety.

3.2 The substation available three-phase short circuit current is 50kA at an X/R ratio of 29 and the single-phase short circuit current is 52kA at an X/R ratio of 20. This information is found in Appendix D of this report.

CALCULATION SHEET

PROJECT: GE/Southern/Linde Advanced NGCC Integration
JOB NUMBER: 20041223

CALC NO CA-ELE-002
SUBJECT ELECTRICAL SYSTEMS ANALYSIS **SHEET NO** 5
BY Nick Mechler **DATE** OPEN **SHEET REV** 0

3.3 Switchyard maximum and minimum voltages are based on a maximum voltage of 240kV (104.3%), a normal voltage of 235kV (102.2%) and a minimum voltage of 230kV (100%). This information is derived from the utility data provided in Appendix D.

3.4 At preliminary system design 10% margin shall be provided on medium voltage buses and 20% margin shall be provided on low voltage buses. As design progresses a 10% spare capacity will be maintained for future use.

3.5 The ETAP model has been designed with all motors running at 100% load factor in the "Design" loading case except for motors where Kiewit has a guaranteed maximum load from the vendor. These guarantees can be found in Appendix C.

4.0 METHODS AND EQUATIONS

4.1 ETAP Enterprise's software "Electrical Transient Analysis Program" (ETAP) 20.6 was used to analyze the GE/Southern/Linde Electrical System.

4.2 The following conditions were set for all three types of studies:

4.2.1 Generators were modeled based on manufacturer provided data.

4.2.2 4.16kV and 13.8kV loads are modeled as individual loads.

4.2.3 For the purposes of preliminary design, equipment down to 480V motor control centers, switchboards, and large panels are modeled. During detailed design, all panels will be modeled with a loading of 80% of their nameplate current rating.

4.2.4 The percent impedances on all transformers are set to the impedances provided by the manufacturer. If manufacturer data is not available at this time, ETAP's typical values for impedance and X/R ratio are used. A ±7.5% impedance tolerance will be included on the impedance of all 2-winding transformers. A -7.5% impedance tolerance will be used during short circuit analysis as this will increase available short circuit current through the transformer. A +7.5% impedance tolerance will be used during load flow and motor starting as this will cause a larger voltage dip and provide the worst-case scenario. For three-winding transformers, a 10% tolerance is used instead of 7.5%.

4.2.5 Cables are modeled for medium voltage equipment. Cable lengths and sizes are estimated and

CALCULATION SHEET

PROJECT: GE/Southern/Linde Advanced NGCC Integration
JOB NUMBER: 20041223

CALC NO CA-ELE-002
SUBJECT ELECTRICAL SYSTEMS ANALYSIS **SHEET NO** 6
BY Nick Mechler **DATE** OPEN **SHEET REV** 0

are based on the available data.

4.3 Equipment/Motor data was based on ETAP's library and estimated horsepower, data will be updated when manufacturer's data becomes available.

4.4 Loading Definitions:

- Lightly Loaded –All motors are off while only static loads remain. "Light" loading Category
- Normally Loaded – Only loads for normal operation are running and are set to the expected normal load. All redundant loads are off. "Normal" loading category.
- Heavily Loaded – 50% of all welding receptacles are running, power panels are set to 80% of main breaker rating and all other normally operating loads are on in full. All redundant loads are off. "Heavy" loading category.

5.0 STUDY CASES

5.1 LOAD FLOW

5.1.1 The following will be used as global variables in ETAP for load flow study cases:

5.1.1.1 Info Tab

- Method - Adaptive Newton-Raphson
- Method - Calculate Flows for 1-Phase & Panel: Unchecked
- Report – Rated Voltage: kV
- Report – Operating Voltage: %
- Report – Power: MVA
- Report – Equipment Cable: Checked
- Report – Exclude Load Diversity: Unchecked
- Options – Initial Voltages: Bus Initial Voltages
- Options – Apply Transformer Phase Shift: Unchecked
- Update – All options: Unchecked

5.1.1.2 Loading Tab

- Charger Loading: Loading Category

5.1.1.3 Adjustment Tab

- Impedance Tolerance – Transformer: Checked, Individual Selected
- Impedance Tolerance – Reactor: Checked, Individual Selected
- Impedance Tolerance – Overload Heater: Unchecked

CALCULATION SHEET

PROJECT: GE/Southern/Linde Advanced NGCC Integration
JOB NUMBER: 20041223

CALC NO CA-ELE-002
SUBJECT ELECTRICAL SYSTEMS ANALYSIS **SHEET NO** 7
BY Nick Mechler **DATE** OPEN **SHEET REV** 0

- Length Tolerance – Cable: Checked, Individual Selected
- Length Tolerance – Transmission Line: Checked, Individual Selected
- Resistance Temp Correction – Cable: Checked, Individual Max. Temp Selected
- Resistance Temp Correction – Transmission Line: Checked, Individual. Max. Temp Selected

5.1.1.4 Alerts Tab

- Loading – All Critical Alarms: 100%
- Loading – All Marginal Alarms: 98%
- Generator/Power Grid Excitation – Overexcitation Critical: 100%
- Generator/Power Grid Excitation – Overexcitation Marginal: 95%
- Generator/Power Grid Excitation – Underexcited: Checked

5.1.2 The details of this section explain deviations from the global variables above for specific study cases

Table 3: Load Flow Study Case Variable Changes

Info Tab	Load Tab		
Study Case ID	Loading Category	Generation Category	Load Diversity Factor
LF NL LV	NORMAL	MINV	BUS MAX
LF HL LV	HEAVY	MINV	BUS MAX
LF LL NV	LIGHT	NORMAL	Constant KVA: 0 Constant Z: 100 Constant I: 100 Generic: 100
LF NL NV	NORMAL	NORMAL	BUS MAX
LF HL NV	HEAVY	NORMAL	BUS MAX
LF LL HV	LIGHT	MAXV	Constant KVA: 0 Constant Z: 100 Constant I: 100 Generic: 100
LF NL HV	NORMAL	MAXV	BUS MAX

5.2 SHORT CIRCUIT

5.2.1 The following will be used as global variables in ETAP for short circuit study cases:

5.2.1.1 Info Tab

CALCULATION SHEET

PROJECT: GE/Southern/Linde Advanced NGCC Integration
JOB NUMBER: 20041223

CALC NO CA-ELE-002
SUBJECT ELECTRICAL SYSTEMS ANALYSIS **SHEET NO** 8
BY Nick Mechler **DATE** OPEN **SHEET REV** 0

- Load Terminal Fault – Calc. Load Term. SC: Checked
- Equip. Cable & OL Heater – MV and LV: Checked
- Transformer Tap: Adjust Base kV Selected
- Report – Contribution Level: 1
- 1-Ph/Panel/1-Ph UPS Subsystem: 1-Ph Unchecked, Panel Checked, 1-Ph UPS Unchecked
- 1-Ph/Panel/1-Ph UPS Subsystem – UPS Model: Vf behind Z selected
- Motor Contribution Based on - Loading Category: Heavy
- Fault: All Busses

5.2.1.2 Standard Tab

- Standard – ANSI Selected
- Prefault Voltage – Fixed: 105%
- Prefault Voltage – Nominal kV Selected
- HV CB Interrupting Capability – Adjusted Based on Bus: Nominal kV
- Zero Sequence MdI: Include Branch Y & Static Load: Unchecked
- Machine X/R: Fixed Selected
- LV CB Interrupting Capability – Evaluate Based on Rated Max. kV Limit: C37.13/UL489 Selected
- Protective Device Duty – Based on Max Through Fault Current
- Protective Device Duty – C37.010-1999
- MF for HV CB & Bus Momentary Duty: Based on Calculated X/R Selected
- MF for LV CB (Molded & Insulated) Duty: Higher MF (Peak or Asym) Selected

5.2.1.3 AF Method Tab, AF FCT Tab, and AF Data Tab will be set to default values and will be updated in the Arc Flash Study

5.2.1.4 Adjustment Tab

- Apply Pos. Tolerance and Max Temp for ANSI Min. Short Circuit & Arc Flash: Checked
- Impedance Tolerance – Transformer checked and Individual Selected
- Impedance Tolerance – Reactor Checked and Individual Selected
- Impedance Tolerance – Overload Heater: Unchecked
- Fault Zf – Include Fault Impedance Zf: Unchecked
- Length Tolerance – Cable Length: Checked and Individual Selected
- Length Tolerance – Transmission Line Length: Checked and Individual Selected
- Resistance Temperature Correction – Cable Checked and Individual Min Temp Selected

CALCULATION SHEET

PROJECT: GE/Southern/Linde Advanced NGCC Integration
JOB NUMBER: 20041223

CALC NO CA-ELE-002
SUBJECT ELECTRICAL SYSTEMS ANALYSIS **SHEET NO** 9
BY Nick Mechler **DATE** OPEN **SHEET REV** 0

- Resistance Temperature Correction – Transmission Line Checked and Individual Min. Temp Selected

5.2.1.5 Alert – Marginal checked and all set to 90%

5.3 MOTOR STARTING

5.3.1 The following will be used as global variables in ETAP for motor starting study cases:

5.3.1.1 Info Tab

- Solution Parameters – Newton-Raphson Selected with default values
- Prestart Charger Loading – Loading Category Selected
- Load Diversity Factor: Bus Maximum
- Report – Bus Voltage in Percent Selected

5.3.1.2 Event Tab

- Action by Load Transitioning – Active: Unchecked

5.3.1.3 Model Tab

- Include Automatic Action – For Prestart Load Flow: Checked
- During & After Motor Acceleration: Checked
- Time Delay – Use Individual LTC Time Delay Selected
- Starting Load of Accelerating Motors: Based on Motor Electrical Rating Selected

5.3.1.4 Adjustment Tab

- Apply Pos. Tolerance and Max Temp for ANSI Min. Short Circuit & Arc Flash: Checked
- Impedance Tolerance – Transformer checked and Individual Selected
- Impedance Tolerance – Reactor Checked and Individual Selected
- Impedance Tolerance – Overload Heater: Unchecked
- Fault Zf – Include Fault Impedance Zf: Unchecked
- Length Tolerance – Cable Length: Checked and Individual Selected
- Length Tolerance – Transmission Line Length: Checked and Individual Selected
- Resistance Temperature Correction – Cable Checked and Individual Min Temp Selected
- Resistance Temperature Correction – Transmission Line Checked and Individual Min. Temp Selected

CALCULATION SHEET

PROJECT: GE/Southern/Linde Advanced NGCC Integration
JOB NUMBER: 20041223

CALC NO CA-ELE-002
SUBJECT ELECTRICAL SYSTEMS ANALYSIS **SHEET NO** 10
BY Nick Mechler **DATE** OPEN **SHEET REV** 0

5.3.1.5 Alert Tab

- Alerts all remain at Default values

5.3.2 The details of this section explain deviations from the global variables above for specific study cases

Table 4: Motor Starting Study Case Variable Changes

Study Case ID	Prestart Loading Category	Prestart Generation Category	Event
MS-CIRWAT	HEAVY	MINV	Start 6Z-CWS-MPM-01A

6.0 CONFIGURATIONS

6.1 The configuration of the system is defined by which breakers are open and closed and what equipment is operating at a given time. The following configurations will be used for this study:

6.1.1 Normal Operation Configuration (Normal):

- Two (2) Circulating Water Pumps in service.

7.0 SCENARIOS

7.1 LOAD FLOW:

7.1.1 The load flow study will look at the following normal scenarios:

TABLE 5: Load Flow Normal Scenarios

Scenario Name	Study Case	Configuration
LF-1	LF NL NV	Normal
LF-2	LF LL NV	Normal
LF-3	LF HL NV	Normal
LF-4	LF NL LV	Normal
LF-5	LF NL HV	Normal

7.1.2 The load flow study will look at the following abnormal scenarios:

CALCULATION SHEET

PROJECT: GE/Southern/Linde Advanced NGCC Integration
JOB NUMBER: 20041223

CALC NO CA-ELE-002
SUBJECT ELECTRICAL SYSTEMS ANALYSIS **SHEET NO** 11
BY Nick Mechler **DATE** OPEN **SHEET REV** 0

TABLE 6: Load Flow Abnormal Scenarios

Scenario Name	Study Case	Configuration
LF-6	LF LL HV	Normal
LF-7	LF HL LV	Normal

7.2 SHORT CIRCUIT:

7.2.1 The short circuit study will look at the following scenarios:

TABLE 7: Short Circuit Scenarios

Scenario Name	Study Case	Configuration
SC-1	SC HL HV	Normal

7.3 MOTOR STARTING:

7.4 The motor starting study starts the largest motor with all loads running coinciding with the minimum prestart voltage in the switchyard and generator voltage in the configurations below. This ensures the system can handle the worst-case scenario for starting a motor.

TABLE 8: Motor Starting Scenarios

Scenario Name	Study Case	Starting Motor	Configuration
MS-1	MS-CIRWAT	6Z-CWS-MPM-01A	Normal

8.0 RESULTS

8.1 LOAD FLOW

8.1.1 Each load flow scenario is described below with its associated report name. Please refer to Appendix E for the complete ETAP Load Flow calculation reports.

8.1.1.1 The table below shows the voltage results for load flow:

CALCULATION SHEET

PROJECT: GE/Southern/Linde Advanced NGCC Integration
JOB NUMBER: 20041223

CALC NO CA-ELE-002
SUBJECT ELECTRICAL SYSTEMS ANALYSIS **SHEET NO** 12
BY Nick Mechler **DATE** OPEN **SHEET REV** 0

TABLE 9: Load Flow Voltage Results

BUS ID	NOMINAL VOLTAGE (KV)	VOLTAGE RESULTS (% OF VNOM)						
		LF-1	LF-2	LF-3	LF-4	LF-5	LF-6	LF-7
6Z-MVA-SWG-1	13.8	99.2	100.9	99.6	99.0	99.0	99.3	100.5
6Z-MVA-SWG-2	13.8	98.9	100.9	99.3	98.9	98.7	99.0	100.5
6Z-MVC-SWG-11	4.16	100.2	103.5	100.4	100.2	100.0	100.2	103.1
6Z-MVC-SWG-21	4.16	99.9	103.5	100.1	99.9	99.7	99.9	103.1
6Z-LVB-SWG-12	0.48	97.4	103.5	97.5	97.4	97.2	97.5	103.1
6Z-LVB-SWG-22	0.48	97.6	103.5	97.6	97.6	97.4	97.7	103.1
6Z-LVB-MCC-121	0.48	97.2	103.5	97.2	97.2	97.0	97.3	103.1
6Z-LVB-MCC-122	0.48	97.2	103.5	97.2	97.2	97.0	97.3	103.1
6Z-LVB-MCC-123	0.48	97.3	103.5	97.3	97.3	97.1	97.4	103.1
6Z-LVB-MCC-221	0.48	97.4	103.5	97.3	97.4	97.2	97.5	103.1
6Z-LVB-MCC-222	0.48	97.4	103.5	97.3	97.4	97.2	97.5	103.1

8.1.1.2 The table below shows the bus loading results for load flow:

TABLE 10: Load Flow Bus Loading Results

BUS ID	BUS RATING (A)	BUS LOADING RESULTS (% OF RATING)						
		LF-1	LF-2	LF-3	LF-4	LF-5	LF-6	LF-7
6Z-MVA-SWG-1	3000	88.7	0	91.3	88.7	88.8	88.6	0
6Z-MVA-SWG-2	1200	20.0	0	22.2	20.0	20.1	20.0	0
6Z-MVC-SWG-11	1200	29.7	0	32.9	29.7	29.7	29.7	0
6Z-MVC-SWG-21	1200	39.2	0	43.4	39.2	39.3	39.2	0
6Z-LVB-SWG-12	4000	92.0	0	99.2	92.0	91.9	92.0	0
6Z-LVB-SWG-22	4000	67.5	0	75.0	67.5	67.6	67.5	0
6Z-LVB-MCC-121	1600	82.3	0	91.5	82.3	82.4	82.3	0
6Z-LVB-MCC-122	1600	81.8	0	90.9	81.8	81.9	81.8	0
6Z-LVB-MCC-123	1600	68.4	0	68.4	68.4	68.3	68.5	0
6Z-LVB-MCC-221	1600	84.4	0	93.8	84.4	84.5	84.3	0
6Z-LVB-MCC-222	1600	84.4	0	93.8	84.4	84.5	84.3	0

8.1.1.3 The table below shows the transformer loading results for load flow:

CALCULATION SHEET

PROJECT: GE/Southern/Linde Advanced NGCC Integration
JOB NUMBER: 20041223

CALC NO CA-ELE-002
SUBJECT ELECTRICAL SYSTEMS ANALYSIS **SHEET NO** 13
BY Nick Mechler **DATE** OPEN **SHEET REV** 0

TABLE 11: Load Flow Transformer Loading Results

TRANSFORMER ID	XMFR RATING (MVA)	TRANSFORMER LOADING RESULTS (% OF RATING)						
		LF-1	LF-2	LF-3	LF-4	LF-5	LF-6	LF-7
6Z-MPT-XFR-1	72	88.0	0	91.0	88.0	88.0	88.0	0
6Z-SUS-XFR-11	8.75	29.4	0	32.6	29.4	29.4	29.4	0
6Z-SUS-XFR-12	3.33	89.6	0	96.8	89.6	89.4	89.7	0
6Z-SUS-XFR-21	8.75	38.7	0	43.0	38.7	38.7	38.7	0
6Z-SUS-XFR-22	3.33	65.9	0	73.2	65.9	65.8	65.9	0

8.2 SHORT CIRCUIT

8.3 Each short circuit scenario is described below with its associated report name. Refer to Appendix F for the complete ETAP Short Circuit calculation reports.

8.3.1 The table below shows the results for the short circuit studies:

TABLE 15: Short Circuit Results

BUS ID	BUS RATING	SHORT CIRCUIT RESULTS (% OF BUS RATING)
		SC-1
6Z-MVA-SWG-1	50KAIC	72.3
6Z-MVA-SWG-2	50KAIC	48.4
6Z-MVC-SWG-11	25KAIC	68.2
6Z-MVC-SWG-21	25KAIC	67.1
6Z-LVB-SWG-12	65KAIC	93.4
6Z-LVB-SWG-22	65KAIC	94.5
6Z-LVB-MCC-121	65KAIC	86.6
6Z-LVB-MCC-122	65KAIC	86.6
6Z-LVB-MCC-123	65KAIC	85.6
6Z-LVB-MCC-221	65KAIC	88.1
6Z-LVB-MCC-222	65KAIC	88.1

8.4 MOTOR STARTING

CALCULATION SHEET

PROJECT: GE/Southern/Linde Advanced NGCC Integration
JOB NUMBER: 20041223

CALC NO CA-ELE-002
SUBJECT ELECTRICAL SYSTEMS ANALYSIS **SHEET NO** 14
BY Nick Mechler **DATE** OPEN **SHEET REV** 0

8.5 Each motor starting scenario is described with its associated report name. Please refer to Appendix G for the complete ETAP Motor Starting calculation reports.

8.5.1 The table below shows the results for the motor starting studies:

TABLE 16: Motor Starting Voltage Results

BUS ID	NOMINAL VOLTAGE (KV)	VOLTAGE RESULTS (% OF VNOM) MS-1
6Z-MVA-SWG-1	13.8	90.3
6Z-MVA-SWG-2	13.8	89.9
6Z-MVC-SWG-11	4.16	90.6
6Z-MVC-SWG-21	4.16	90.2
6Z-LVB-SWG-12	0.48	87.7
6Z-LVB-SWG-22	0.48	87.6
6Z-LVB-MCC-121	0.48	87.5
6Z-LVB-MCC-122	0.48	87.5
6Z-LVB-MCC-123	0.48	87.6
6Z-LVB-MCC-221	0.48	87.3
6Z-LVB-MCC-222	0.48	87.3
6Z-CWS-MPM-01A	4	93.7

9.0 CONCLUSIONS

9.1 RECOMMENDATIONS:

9.1.1 The load flow analysis indicated that the electrical system would perform within standard requirements under normal and worst-case situations. Voltage on buses will not drop below or rise above 5% during normal plant operation and not drop below NEMA limit levels during abnormal operations. SUS transformers must have tap settings of -2.5% applied to their primary windings (13.8kV side).

9.1.2 The short circuit analysis confirmed that fault current levels would be below the proposed equipment ratings (50 KAIC for 13.8kV equipment, 25 KAIC for 4.16kV equipment, and 65 KAIC for 480V equipment). No changes to the system are needed.

9.1.3 The motor starting analysis confirmed the 13.8 kV power system can start the 5500HP Circulating Water Pump Motor (6Z-CWS-MPM-01A). No changes to the system are needed.

9.1.4 These calculations have proven the capability of the power system under the conditions

CALCULATION SHEET

PROJECT: GE/Southern/Linde Advanced NGCC Integration
JOB NUMBER: 20041223

CALC NO CA-ELE-002
SUBJECT ELECTRICAL SYSTEMS ANALYSIS **SHEET NO** 15
BY Nick Mechler **DATE** OPEN **SHEET REV** 0

described above. Any deviations from the transformer tap settings detailed in this report will need to be analyzed in ETAP with the current system configuration to confirm proper performance of the system. The scenarios in this calculation have utilized worst case or conservative conditions and actual operation and field conditions should be analyzed to verify if tapping is necessary.

10.0 REFERENCES

[1] IEEE Std 399-1997, IEEE Recommended Practice for Industrial and Commercial Power Systems Analysis. (IEEE Brown Book) (Not Attached)

[2] IEEE Std 141-1993, IEEE Recommended Practice for Electrical Power Distribution for Industrial Plants. (IEEE Red Book) (Not Attached)

[3] IEEE Std. 666-2007 IEEE Design Guide for Electrical Power Service Systems for Generating Stations. (Not Attached)

[4] IEEE Std. C50.13-2014, IEEE Standard for Cylindrical-Rotor 50Hz and 60Hz Synchronous Generators Rated 10 MVA and Above (Not Attached)

[5] IEEE Std. 67, IEEE Guide for Operation and Maintenance of Turbine Generators (Not Attached)

APPENDICES

PROJECT: GE/Southern/Linde Advanced NGCC Integration
JOB NUMBER: 20041223

CALC NO CA-ELE-002

SUBJECT ELECTRICAL SYSTEMS ANALYSIS

BY Nick Mechler **DATE** 4/21/2023 **SHEET REV** 0

APPENDIX A

Description	No. of Pages
Overall One-Line Diagram	2

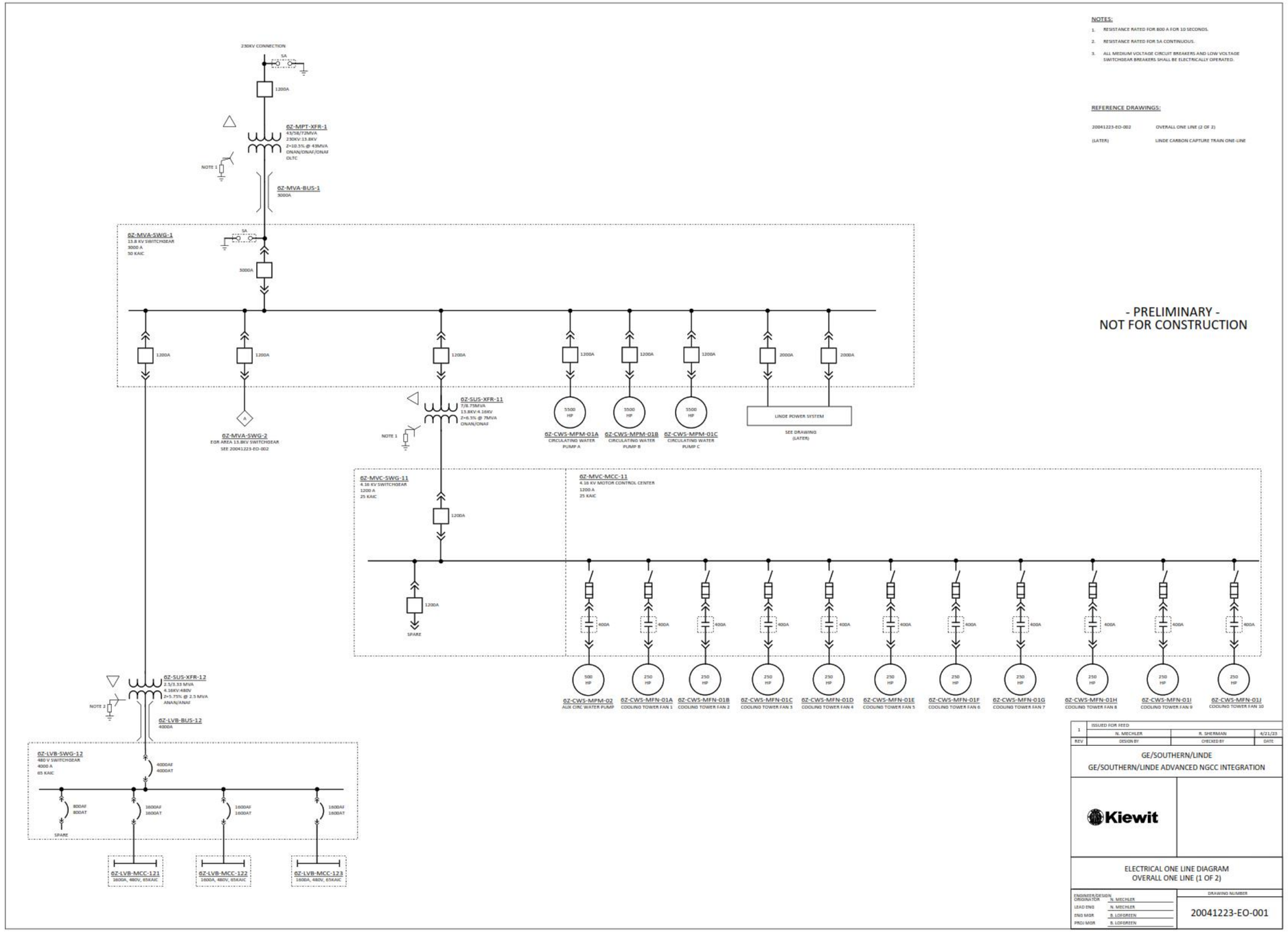

NOTES:

1. RESISTANCE RATED FOR 800 A FOR 10 SECONDS.
2. RESISTANCE RATED FOR 5A CONTINUOUS.
3. ALL MEDIUM VOLTAGE CIRCUIT BREAKERS AND LOW VOLTAGE SWITCHGEAR BREAKERS SHALL BE ELECTRICALLY OPERATED.

REFERENCE DRAWINGS:

20041223-EO-002	OVERALL ONE LINE (2 OF 2)
(LATER)	LINDE CARBON CAPTURE TRAIN ONE-LINE

- PRELIMINARY -
NOT FOR CONSTRUCTION

REV	DESIGN BY	CHECKED BY	DATE
1	ISSUED FOR FEED	N. MECHLER	R. SHERMAN	4/21/23

GE/SOUTHERN/LINDE
GE/SOUTHERN/LINDE ADVANCED NGCC INTEGRATION

Kiewit

ELECTRICAL ONE LINE DIAGRAM
OVERALL ONE LINE (1 OF 2)

ENGINEER/DESIGN ORIGINATOR	N. MECHLER
LEAD ENG	N. MECHLER
ENG MGR	B. LOFGREEN
PROJ MGR	B. LOFGREEN

DRAWING NUMBER
20041223-EO-001

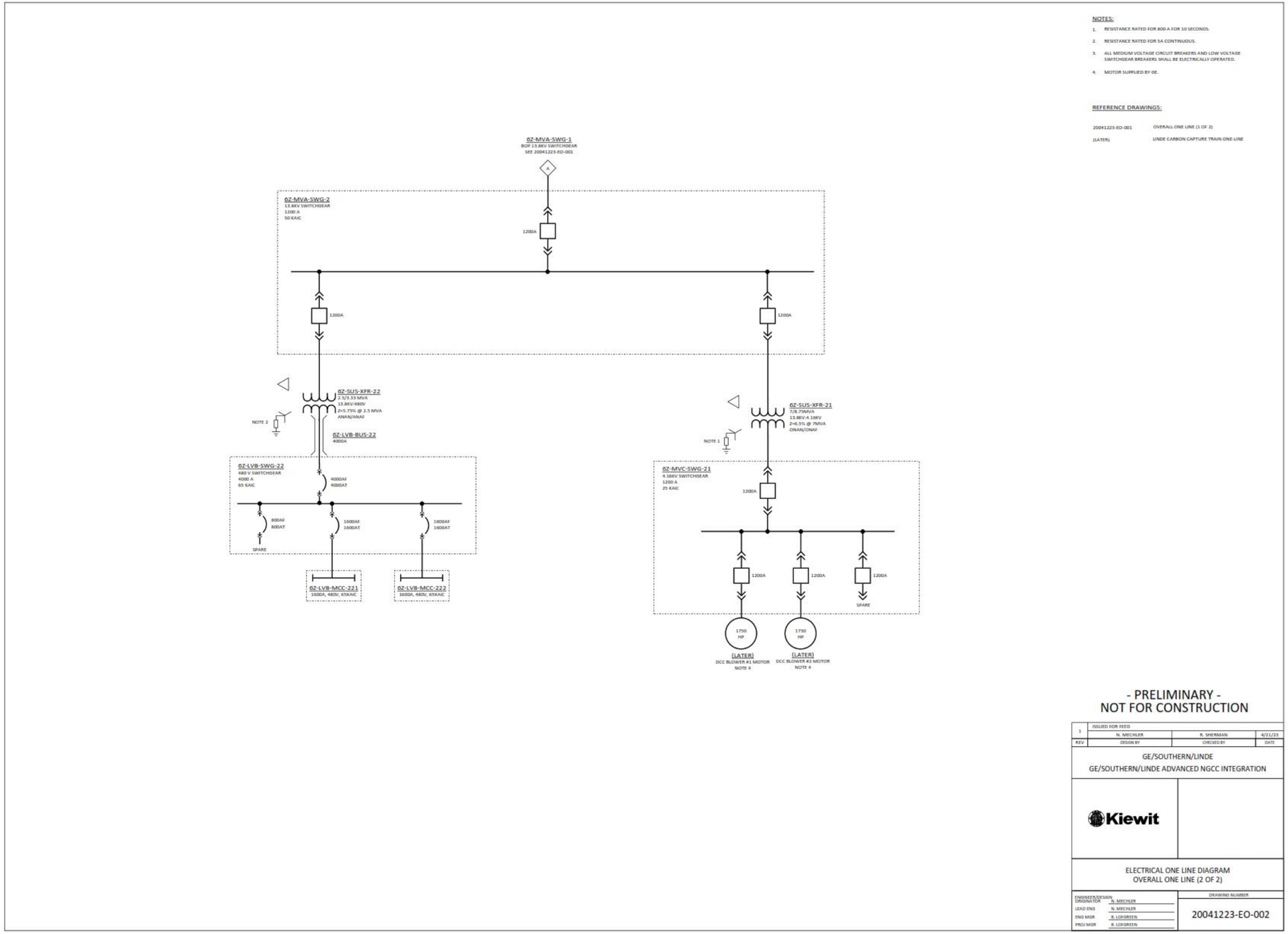
NOTES:
1. RESISTANCE RATED FOR 800 A FOR 10 SECONDS.
2. RESISTANCE RATED FOR 5A CONTINUOUS.
3. ALL MEDIUM VOLTAGE CIRCUIT BREAKERS AND LOW VOLTAGE SWITCHGEAR BREAKERS SHALL BE ELECTRICALLY OPERATED.
4. MOTOR SUPPLIED BY GE.
REFERENCE DRAWINGS:
20041223-EO-001 OVERALL ONE LINE (1 OF 2)
(LATER) LINDE CARBON CAPTURE TRAIN ONE-LINE
6Z-MVA-SWG-1
BOP 13.8KV SWITCHGEAR
SEE 20041223-EO-001
A
6Z-MVA-SWG-2
13.8KV SWITCHGEAR
1200 A
50 KAIC
1200A
1200A
1200A
6Z-SUS-XFR-22
2.5/3.33 MVA
13.8KV-480V
Z=5.75% @ 2.5 MVA
ANAN/ANAF
NOTE 2
6Z-LVB-BUS-22
4000A
6Z-LVB-SWG-22
480 V SWITCHGEAR
4000 A
65 KAIC
4000AF
4000AT
800AF
800AT
1600AF
1600AT
1600AF
1600AT
SPARE
6Z-LVB-MCC-221
1600A, 480V, 65KAIC
6Z-LVB-MCC-222
1600A, 480V, 65KAIC
6Z-SUS-XFR-21
7/8.75MVA
13.8KV-4.16KV
Z=6.5% @ 7MVA
ONAN/ONAF
NOTE 1
6Z-MVC-SWG-21
4.16KV SWITCHGEAR
1200 A
25 KAIC
1200A
1200A
1200A
1200A
SPARE
1750 HP
1750 HP
(LATER)
DCC BLOWER #1 MOTOR
NOTE 4
(LATER)
DCC BLOWER #2 MOTOR
NOTE 4
- PRELIMINARY -
NOT FOR CONSTRUCTION
1 ISSUED FOR FEED N. MECHLER R. SHERMAN 4/21/23
REV DESIGN BY CHECKED BY DATE
GE/SOUTHERN/LINDE
GE/SOUTHERN/LINDE ADVANCED NGCC INTEGRATION
Kiewit
ELECTRICAL ONE LINE DIAGRAM
OVERALL ONE LINE (2 OF 2)
ENGINEER/DESIGN ORIGINATOR N. MECHLER
LEAD ENG N. MECHLER
ENG MGR B. LOFGREN
PROJ MGR B. LOFGREN
DRAWING NUMBER
20041223-EO-002

APPENDICES

PROJECT: GE/Southern/Linde Advanced NGCC Integration
JOB NUMBER: 20041223

CALC NO CA-ELE-002

SUBJECT ELECTRICAL SYSTEMS ANALYSIS

BY Nick Mechler **DATE** 4/21/2023 **SHEET REV** 0

APPENDIX B

Description	No. of Pages
Project Load List	6

GE/SOUTHERN/LINDE ADVANCED NGCC INTEGRATION
ELECTRICAL LOAD LIST

Kiewit Engineering Group Inc.

REV	DATE	DESCRIPTION	ORIG	CHK	APPR
1	21-APR-2023	ISSUED FOR FEED	NJM	RMS	BRL
0	10-MAR-2023	ISSUED FOR FEED	NJM	HH	BRL
A	22-FEB-2023	ISSUED FOR REVIEW	NJM	HH	BRL

PROJECT	DOCUMENT NUMBER	REVISION
20041223	20041223-CA-ELE-001	1

KIEWIT ENGINEERING GROUP INC.

000000-EL-TMP-0001 v. 04

13.8KV SWITCHGEAR

GE/SOUTHERN/LINDE ADVANCED NGCC INTEGRATION

LOAD	TAG ID	HP	VOLTS	FL KW	FL KVA	FL AMPS	FL EFF.	FL P.F.	DEMAND	BREAKER SIZE	DEMAND HP	DEMAND KW	DEMAND KVA	DEMAND AMPS	COMMENTS	
50 KA	**6Z-MVA-SWG-1**															
LINDE LUMPED LOAD FEED A	(LATER)	44500	13200	36870.7	39016.6	1706.5	0.900	0.945	1.00	2000	44500.0	36870.7	39016.6	1640.9	LINDE PEAK LOAD	
LINDE LUMPED LOAD FEED B	(LATER)	44500	13200	36870.7	39016.6	1706.5	0.900	0.945	0.00	2000	0.0	0.0	0.0	0.0	LINDE PEAK LOAD	
CIRC WATER PUMP A	6Z-CWS-MPM-01A	5500	13200	4254.5	4654.8	203.6	0.964	0.914	1.00	1200	5500.0	4254.5	4654.8	195.8		
CIRC WATER PUMP B	6Z-CWS-MPM-01B	5500	13200	4254.5	4654.8	203.6	0.964	0.914	1.00	1200	5500.0	4254.5	4654.8	195.8		
CIRC WATER PUMP C	6Z-CWS-MPM-01C	5500	13200	4254.5	4654.8	203.6	0.964	0.914	0.00	1200	0.0	0.0	0.0	0.0		
4.16KV MCC/SWITCHGEAR 11	6Z-MVC-SWG-11		13800	2390.5	2924.5	122.4	1.000	0.817	1.00	1200		2390.5	2924.5	122.4		
13.8KV SWITCHGEAR 2	6Z-MVA-SWG-2		13800	4290.0	5113.2	213.9	1.000	0.848	1.00	1200		4336.0	5113.2	213.9		
480V SWITCHGEAR 111	6Z-LVB-SWG-12		13800	1874.2	2115.7	88.5	1.000	0.886	1.00	1200		1874.2	2115.7	88.5		
6Z-MVA-SWG-1 SUBTOTALS			13800									**53980**	**58733**	**2457**	**BUS PF**	**0.92**
	CONNECTED LOAD			95059.6	106332.9	4448.6										
50 KA	**6Z-MVA-SWG-2**															
4.16KV MCC/SWITCHGEAR 21	6Z-MVC-SWG-21		13800	2710.2	3196.0	133.7	1.000	0.848	1.00	1200		2710.2	3196.0	133.7		
480V SWITCHGEAR 22	6Z-LVB-SWG-22		13800	1579.7	1917.2	80.2	1.000	0.824	1.00	1200		1579.7	1917.2	80.2		
6Z-MVA-SWG-2 SUBTOTALS			13800									**4290**	**5113**	**214**	**BUS PF**	**0.84**
	CONNECTED LOAD			4290.0	5113.219	213.9										

4.16KV SWITCHGEAR

GE/SOUTHERN/LINDE ADVANCED NGCC INTEGRATION

LOAD	TAG ID	HP	VOLTS	FL KW	FL KVA	FL AMPS	FL EFF.	FL P.F.	DEMAND	BREAKER SIZE	DEMAND HP	DEMAND KW	DEMAND KVA	DEMAND AMPS	COMMENTS	
<50 KA	**6Z-MVC-SWG-11 / 6Z-MVC-MCC-11**															
COOLING TOWER FAN 1	6Z-CWS-MFN-01A	250	4000	199.0	242.3	35.0	0.937	0.821	1.00	400	250.0	199.0	242.3	33.6		
COOLING TOWER FAN 2	6Z-CWS-MFN-01B	250	4000	199.0	242.3	35.0	0.937	0.821	1.00	400	250.0	199.0	242.3	33.6		
COOLING TOWER FAN 3	6Z-CWS-MFN-01C	250	4000	199.0	242.3	35.0	0.937	0.821	1.00	400	250.0	199.0	242.3	33.6		
COOLING TOWER FAN 4	6Z-CWS-MFN-01D	250	4000	199.0	242.3	35.0	0.937	0.821	1.00	400	250.0	199.0	242.3	33.6		
COOLING TOWER FAN 5	6Z-CWS-MFN-01E	250	4000	199.0	242.3	35.0	0.937	0.821	1.00	400	250.0	199.0	242.3	33.6		
COOLING TOWER FAN 6	6Z-CWS-MFN-01F	250	4000	199.0	242.3	35.0	0.937	0.821	1.00	400	250.0	199.0	242.3	33.6		
COOLING TOWER FAN 7	6Z-CWS-MFN-01G	250	4000	199.0	242.3	35.0	0.937	0.821	1.00	400	250.0	199.0	242.3	33.6		
COOLING TOWER FAN 8	6Z-CWS-MFN-01H	250	4000	199.0	242.3	35.0	0.937	0.821	1.00	400	250.0	199.0	242.3	33.6		
COOLING TOWER FAN 9	6Z-CWS-MFN-01I	250	4000	199.0	242.3	35.0	0.937	0.821	1.00	400	250.0	199.0	242.3	33.6		
COOLING TOWER FAN 10	6Z-CWS-MFN-01J	250	4000	199.0	242.3	35.0	0.937	0.821	1.00	400	250.0	199.0	242.3	33.6		
AUX CIRC WATER PUMP	6Z-CWS-MPM-02	500	4000	400.9	501.1	72.3	0.930	0.800	1.00	400	500.0	400.9	501.1	69.6		
SPARE - PER CONTRACT			4160							1200						
6Z-MVC-SWG-11 / 6Z-MVC-MCC-11 SUBTOTALS			4160									**2391**	**2925**	**406**	**BUS PF**	**0.82**
		CONNECTED LOAD		2390.5	3041.503	422.1										

<50 KA	6Z-MVC-SWG-21															
DCC BLOWER #1 MOTOR		1750	4000	1355.1	1598.0	230.7	0.963	0.848	1.00	1200	1750.0	1355.1	1598.0	221.8		
DCC BLOWER #2 MOTOR		1750	4000	1355.1	1598.0	230.7	0.963	0.848	1.00	1200	1750.0	1355.1	1598.0	221.8		
SPARE - PER CONTRACT			4160							1200						
6Z-MVC-SWG-21 SUBTOTALS			4160									**2710**	**3196**	**444**	**BUS PF**	**0.85**
		CONNECTED LOAD		2710.2	3323.865	461.3										

LOW VOLTAGE SWITCHGEAR																		
GE/SOUTHERN/LINDE ADVANCED NGCC INTEGRATION																		
LOAD	TAG ID	HP	VOLTS	FL KW	FL KVA	FL AMPS	NEC 430.250 FLA	FL EFF.	FL P.F.	DEMAND	FRAME SIZE	BREAKER SIZE	DEMAND HP	DEMAND KW	DEMAND KVA	DEMAND AMPS	COMMENTS	
65 KA	6Z-LVB-SWG-12																	
BOP MCC 1	6Z-LVB-MCC-121		480	712.6	824.3	991.5		1.000	0.864	1.00	1600	1600		712.6	824.3	991.5		
BOP MCC 2	6Z-LVB-MCC-122		480	762.6	874.3	1051.6		1.000	0.872	1.00	1600	1600		762.6	874.3	1051.6		
BOP MCC 3 (DISTRIBUTION)	6Z-LVB-MCC-123		480	399.0	417.1	501.7		1.000	0.957	1.00	1600	1600		399.0	417.1	501.7		
SPARE - PER CONTRACT			480								800	800						
6Z-LVB-SWG-12 SUBTOTALS			480											1874	2116	2545	BUS PF	0.89
		CONNECTED LOAD		1874.2	2115.709	2544.8												
65 KA	6Z-LVB-SWG-22																	
EGR MCC 1	6Z-LVB-MCC-221		480	811.5	980.2	1179.0		1.000	0.828	1.00	1600	1600		811.5	980.2	1179.0		
EGR MCC 2	6Z-LVB-MCC-222		480	768.3	937.0	1127.0		1.000	0.820	1.00	1600	1600		768.3	937.0	1127.0		
SPARE - PER CONTRACT			480								800	800						
6Z-LVB-SWG-22 SUBTOTALS			480											1580	1917	2306	BUS PF	0.82
		CONNECTED LOAD		1579.7	1917.195	2306.0												

LOW VOLTAGE MOTOR CONTROL CENTERS

GE/SOUTHERN/LINDE ADVANCED NGCC INTEGRATION

LOAD	TAG ID	MOTOR SPACE HTR REQUIRED?	HP	VOLTS	FL KW	FL KVA	FL AMPS	NEC 430.250 FLA	FL EFF.	FL P.F.	TYPE	FRAME SIZE	BREAKER SIZE	SPACE	DEMAND	DEMAND KW	DEMAND KVA	DEMAND AMPS	COMMENTS
65 KA	6Z-LVB-MCC-121																		
BUS SIZE (AMPS) = 1600																			
UNIT 1 HRSG TIE-IN DAMPER SEAL AIR SKID	6A-FLG-SKD-01	YES	100	460	78.9	90.7	113.8	**124.0**	0.945	0.870	FVNR	4	-	4	1.00	78.9	90.7	113.8	
UNIT 1 CC TRAIN DAMPER SEAL AIR SKID	6A-FLG-SKD-02	YES	100	460	78.9	90.7	113.8	**124.0**	0.945	0.870	FVNR	4	-	4	1.00	78.9	90.7	113.8	
UNIT 1 CC TRAIN DAMPER	6A-DPR-FLG-190	NO	1	460	0.9	1.2	1.5	**2.1**	0.825	0.760	FVNR	1	-	2	1.00	0.9	1.2	1.5	
DEMINERALIZED WATER FORWARDING PUMP A	6Z-DWS-MPM-01A	NO	15	460	12.3	14.8	16.8	**21.0**	0.910	0.830	FVNR	2	-	2	1.00	12.3	14.8	16.8	
COOLING TOWER BLOWDOWN SODIUM BISULFITE FEED PUMP A	6Z-TCF-MPM-06A	NO	0.5	460	0.5	0.7	0.9	**1.1**	0.788	0.680	FVNR	1	-	2	1.00	0.5	0.7	0.9	
CORROSION INHIBITOR FEED PUMP A	6Z-TCF-MPM-02A	NO	0.5	460	0.5	0.7	0.9	**1.1**	0.788	0.680	FVNR	1	-	2	1.00	0.5	0.7	0.9	
SULFURIC ACID FEED PUMP A	6Z-TCF-MPM-03A	NO	0.5	460	0.5	0.7	0.9	**1.1**	0.788	0.680	FVNR	1	-	2	1.00	0.5	0.7	0.9	
SODIUM HYPOCHLORITE FEED PUMP A	6Z-TCF-MPM-04A	NO	0.5	460	0.5	0.7	0.9	**1.1**	0.788	0.680	FVNR	1	-	2	1.00	0.5	0.7	0.9	
COOLING TOWER CHEM FEED SUMP PUMP A	6Z-TCF-MPM-01A	NO	1	460	0.9	1.2	1.5	**2.1**	0.825	0.760	FVNR	1	-	2	1.00	0.9	1.2	1.5	
SCALE INHIBITOR FEED PUMP A	6Z-TCF-SKD-05A			460	0.5	0.6	0.7		0.900	0.850	Dual Bkr	125	20	1	1.00	0.5	0.6	0.7	
ANTI-FOAM DOSAGE UNIT A FEED PUMP A	6A-AFA-MPM-01A			460	0.5	0.6	0.7		0.900	0.850	Dual Bkr	125	20	1	1.00	0.5	0.6	0.7	
ANTI-FOAM DOSAGE UNIT B FEED PUMP A	6A-AFA-MPM-01B			460	0.5	0.6	0.7		0.900	0.850	Dual Bkr	125	20	1	1.00	0.5	0.6	0.7	
SERVICE WATER PUMP A	6Z-SWS-MPM-01A	YES	150	460	117.7	135.3	169.9	**180.0**	0.950	0.870	FVNR	5	-	5	1.00	117.7	135.3	169.9	
POTABLE WATER PUMP A	6Z-PWS-MPM-01			460	0.5	0.6	0.7		0.900	0.850	Dual Bkr	125	20	1	1.00	0.5	0.6	0.7	
AIR COMPRESSOR A	6Z-IA-CMP-01			480	122.0	143.5	172.6		0.900	0.850	BKR	250	225	3	1.00	122.0	143.5	172.6	
WASTE WATER SUMP PUMP	6Z-WW-MPM-01A			480	0.5	0.6	0.7		0.900	0.850	Dual Bkr	125	20	1	1.00	0.5	0.6	0.7	
OIL/WATER SEPARATOR PUMP A	6Z-PDR-MPM-01A	NO	5	460	4.3	5.2	6.5	**7.6**	0.875	0.820	FVNR	1	-	2	1.00	4.3	5.2	6.5	
EGR UNIT 1 INLET DAMPER SEAL AIR SKID	01-EGR-SKD-03	YES	60	460	40.1	46.1	57.8	**65.0**	0.930	0.870	FVNR	3	-	3	1.00	40.1	46.1	57.8	
UNIT 1 VENT STACK DAMPER SEAL AIR SKID	01-EGR-SKD-04	YES	60	460	40.1	46.1	57.8	**65.0**	0.930	0.870	FVNR	3	-	3	1.00	40.1	46.1	57.8	
UNIT 1 VENT STACK DAMPER	01-EGR-DPR-02	NO	1	460	0.9	1.2	1.5	**2.1**	0.825	0.760	FVNR	1	-	2	1.00	0.9	1.2	1.5	
UNIT 1 GT TIE-IN DAMPER SEAL AIR SKID	01-EGR-SKD-05	YES	60	460	40.1	46.1	57.8	**65.0**	0.930	0.870	FVNR	3	-	3	1.00	40.1	46.1	57.8	
UNIT 1 GT TIE-IN DAMPER	01-EGR-DPR-03	NO	1	460	0.9	1.2	1.5	**2.1**	0.825	0.760	FVNR	1	-	2	1.00	0.9	1.2	1.5	
CONDENSATE PUMP A	6Z-CND-MPM-01A	YES	25	460	20.2	23.2	29.1	**34.0**	0.924	0.870	FVNR	2	-	2	1.00	20.2	23.2	29.1	
BATTERY CHARGER 1	6Z-LVE-CHG-1			480	150.0	150.0	180.4		1.000	1.000	BKR	250	250	3	1.00	150.0	150.0	180.4	
SPARE - PER CONTRACT				460							FVNR	2		2					
SPARE SIZE 1 STARTER				460							FVNR	1		2					
SPARE 20A BKR				480							Dual Bkr	125	20	1					
SPARE 30A BKR				480							Dual Bkr	125	30	1					
FUTURE 12" SPACE				480										2					
6Z-LVB-MCC-121 SUBTOTALS								NUMBER OF SECTIONS (W/O MAIN BREAKER)						7		713	824	991	BUS PF 0.86
CONNECTED LOAD					712.6	824.3	991.5									PERCENT LOADED= 62.0%			PERCENT CONSTANT KVA 61%

LOAD	TAG ID	MOTOR SPACE HTR REQUIRED?	HP	VOLTS	FL KW	FL KVA	FL AMPS	NEC 430.250 FLA	FL EFF.	FL P.F.	TYPE	FRAME SIZE	BREAKER SIZE	SPACE	DEMAND	DEMAND KW	DEMAND KVA	DEMAND AMPS	COMMENTS
65 KA	6Z-LVB-MCC-122																		
BUS SIZE (AMPS) = 1600																			
UNIT 2 HRSG TIE IN DAMPER SEAL AIR SKID	6B-FLG-SKD-01	YES	100	460	78.9	90.7	113.8	**124.0**	0.945	0.870	FVNR	4	-	4	1.00	78.9	90.7	113.8	
UNIT 2 CC TRAIN DAMPER SEAL AIR SKID	6B-FLG-SKD-02	YES	100	460	78.9	90.7	113.8	**124.0**	0.945	0.870	FVNR	4	-	4	1.00	78.9	90.7	113.8	
UNIT 2 CC TRAIN DAMPER	6A-DPR-FLG-290	NO	1	460	0.9	1.2	1.5	**2.1**	0.825	0.760	FVNR	1	-	2	1.00	0.9	1.2	1.5	
DEMINERALIZED WATER FORWARDING PUMP B	6Z-DWS-MPM-01B	NO	15	460	12.3	14.8	16.8	**21.0**	0.910	0.830	FVNR	2	-	2	1.00	12.3	14.8	16.8	
COOLING TOWER BLOWDOWN SODIUM BISULFITE FEED PUMP B	6Z-TCF-MPM-06B	NO	0.5	460	0.5	0.7	0.9	**1.1**	0.788	0.680	FVNR	1	-	2	1.00	0.5	0.7	0.9	
CORROSION INHIBITOR FEED PUMP B	6Z-TCF-MPM-02B	NO	0.5	460	0.5	0.7	0.9	**1.1**	0.788	0.680	FVNR	1	-	2	1.00	0.5	0.7	0.9	
SULFURIC ACID FEED PUMP B	6Z-TCF-MPM-03B	NO	0.5	460	0.5	0.7	0.9	**1.1**	0.788	0.680	FVNR	1	-	2	1.00	0.5	0.7	0.9	
SODIUM HYPOCHLORITE FEED PUMP B	6Z-TCF-MPM-04B	NO	0.5	460	0.5	0.7	0.9	**1.1**	0.788	0.680	FVNR	1	-	2	1.00	0.5	0.7	0.9	
COOLING TOWER CHEM FEED SUMP PUMP B	6Z-TCF-MPM-01B	NO	1	460	0.9	1.2	1.5	**2.1**	0.825	0.760	FVNR	1	-	2	1.00	0.9	1.2	1.5	
SCALE INHIBITOR FEED PUMP B	6Z-TCF-SKD-05B			460	0.5	0.6	0.7		0.900	0.850	Dual Bkr	125	20	1	1.00	0.5	0.6	0.7	
ANTI-FOAM DOSAGE UNIT A FEED PUMP B	6B-AFA-MPM-01A			460	0.5	0.6	0.7		0.900	0.850	Dual Bkr	125	20	1	1.00	0.5	0.6	0.7	
ANTI-FOAM DOSAGE UNIT B FEED PUMP B	6B-AFA-MPM-01B			460	0.5	0.6	0.7		0.900	0.850	Dual Bkr	125	20	1	1.00	0.5	0.6	0.7	
SERVICE WATER PUMP B	6Z-SWS-MPM-01B	YES	150	460	117.7	135.3	169.9	**180.0**	0.950	0.870	FVNR	5	-	5	1.00	117.7	135.3	169.9	
POTABLE WATER PUMP B	6Z-PWS-MPM-02			460	0.5	0.6	0.7		0.900	0.850	Dual Bkr	125	20	1	1.00	0.5	0.6	0.7	
AIR COMPRESSOR B	6Z-IA-CMP-02			480	122.0	143.5	172.6		0.900	0.850	BKR	250	225	3	1.00	122.0	143.5	172.6	
WASTE WATER SUMP PUMP	6Z-WW-MPM-01B			480	0.5	0.6	0.7		0.900	0.850	Dual Bkr	125	20	1	1.00	0.5	0.6	0.7	
OIL/WATER SEPARATOR PUMP B	6Z-PDR-MPM-01B	NO	5	460	4.3	5.2	6.5	**7.6**	0.875	0.820	FVNR	1	-	2	1.00	4.3	5.2	6.5	
EGR UNIT 2 INLET DAMPER SEAL AIR SKID	02-EGR-SKD-03	YES	60	460	40.1	46.1	57.8	**65.0**	0.930	0.870	FVNR	3	-	3	1.00	40.1	46.1	57.8	
UNIT 2 VENT STACK DAMPER SEAL AIR SKID	02-EGR-SKD-04	YES	60	460	40.1	46.1	57.8	**65.0**	0.930	0.870	FVNR	3	-	3	1.00	40.1	46.1	57.8	
UNIT 2 VENT STACK DAMPER	02-EGR-DPR-02	NO	1	460	0.9	1.2	1.5	**2.1**	0.825	0.760	FVNR	1	-	2	1.00	0.9	1.2	1.5	
UNIT 2 GT TIE IN DAMPER SEAL AIR SKID	02-EGR-SKD-05	YES	60	460	40.1	46.1	57.8	**65.0**	0.930	0.870	FVNR	3	-	3	1.00	40.1	46.1	57.8	
UNIT 2 GT TIE-IN DAMPER	02-EGR-DPR-03	NO	1	460	0.9	1.2	1.5	**2.1**	0.825	0.760	FVNR	1	-	2	1.00	0.9	1.2	1.5	
CONDENSATE PUMP B	6Z-CND-MPM-01B	YES	25	460	20.2	23.2	29.1	**34.0**	0.924	0.870	FVNR	2	-	2	1.00	20.2	23.2	29.1	
BATTERY CHARGER 2	6Z-LVE-CHG-2			480	150.0	150.0	180.4		1.000	1.000	BKR	250	250	3	1.00	150.0	150.0	180.4	
UPS BYPASS	6Z-LVF-XFR-1			480	50.0	50.0	60.1		1.000	1.000	Dual Bkr	125	80	1	1.00	50.0	50.0	60.1	
SPARE - PER CONTRACT				460							FVNR	2		2					
SPARE SIZE 1 STARTER				460							FVNR	1		2					
SPARE 20A BKR				480							Dual Bkr	125	20	1					
SPARE 30A BKR				480							Dual Bkr	125	30	1					
FUTURE 12" SPACE				480										2					
6Z-LVB-MCC-122 SUBTOTALS								NUMBER OF SECTIONS (W/O MAIN BREAKER)						7		763	874	1052	BUS PF 0.87
CONNECTED LOAD					762.6	874.3	1051.6									PERCENT LOADED= 65.7%			PERCENT CONSTANT KVA 58%

GE/SOUTHERN/LINDE ADVANCED NGCC INTEGRATION

LOAD	TAG ID	MOTOR SPACE HTR REQUIRED?	HP	VOLTS	FL KW	FL KVA	FL AMPS	NEC 430.250 FLA	FL EFF	FL P.F.	TYPE	FRAME SIZE	BREAKER SIZE	SPACE	DEMAND	DEMAND KW	DEMAND KVA	DEMAND AMPS	COMMENTS	
65 KA	6Z-LVB-MCC-123																			
BUS SIZE (AMPS) = 1600																				
HEAT TRACE PANEL 1	6Z-HTT-PPL-01			480	54.0	54.0	65.0		1.000	1.000	Dual Bkr	125	100	1	0.80	43.2	43.2	52.0	COLOCATED 480V:208/120V TRANSFORMER	
HEAT TRACE PANEL 2	6Z-HTT-PPL-02			480	54.0	54.0	65.0		1.000	1.000	Dual Bkr	125	100	1	0.80	43.2	43.2	52.0	COLOCATED 480V:208/120V TRANSFORMER	
BOP ENCLOSURE 480V PANEL	6Z-LVB-PPL-1231			480	74.8	83.1	100.0		1.000	0.900	Dual Bkr	125	125	1	0.80	59.9	66.5	80.0		
BOP ENCLOSURE 208V/120V PANEL	6Z-LVD-PPL-1232			480	48.6	54.0	65.0		1.000	0.900	Dual Bkr	125	100	1	0.80	38.9	43.2	52.0	COLOCATED 480V:208/120V TRANSFORMER	
SUBSTATION 480V PANEL	6Z-LVB-PPL-1234			480	74.8	83.1	100.0		1.000	0.900	Dual Bkr	125	125	1	0.80	59.9	66.5	80.0		
HEAT TRACE PANEL 3	6Z-HTT-PPL-03			480	54.0	54.0	65.0		1.000	1.000	Dual Bkr	125	100	1	0.80	43.2	43.2	52.0	COLOCATED 480V:208/120V TRANSFORMER	
HEAT TRACE PANEL 4	6Z-HTT-PPL-04			480	54.0	54.0	65.0		1.000	1.000	Dual Bkr	125	100	1	0.80	43.2	43.2	52.0	COLOCATED 480V:208/120V TRANSFORMER	
ADMIN BUILDING 480V PANEL	6Z-LVB-PPL-1233			480	83.1	83.1	100.0		1.000	1.000	Dual Bkr	125	125	1	0.80	66.5	66.5	80.0		
OIL/WATER SEPARATOR PUMP 2A	6Z-PDR-MPM-02A	NO	0.5	460	0.5	0.7	0.9	1.1	0.788	0.680	FVNR	1	-	2	1.00	0.5	0.7	0.9		
OIL/WATER SEPARATOR PUMP 2B	6Z-PDR-MPM-02B	NO	0.5	460	0.5	0.7	0.9	1.1	0.788	0.680	FVNR	1	-	2	1.00	0.5	0.7	0.9		
SPARE - PER CONTRACT				460							FVNR	2		2						
SPARE SIZE 1 STARTER				460							FVNR	1		2						
SPARE 20A BKR				480							Dual Bkr	125	20	1						
SPARE 30A BKR				480							Dual Bkr	125	30	1						
FUTURE 12" SPACE				480										2						
6Z-LVB-MCC-123 SUBTOTALS								NUMBER OF SECTIONS (W/O MAIN BREAKER)						3		399	417	582	BUS PF	0.96
			CONNECTED LOAD		267.0	275.8	331.7									PERCENT LOADED=		31.4%	PERCENT CONSTANT KVA	0%

LOAD	TAG ID	MOTOR SPACE HTR REQUIRED?	HP	VOLTS	FL KW	FL KVA	FL AMPS	NEC 430.250 FLA	FL EFF	FL P.F.	TYPE	FRAME SIZE	BREAKER SIZE	SPACE	DEMAND	DEMAND KW	DEMAND KVA	DEMAND AMPS	COMMENTS	
65 KA	6Z-LVB-MCC-221																			
BUS SIZE (AMPS) = 1600																				
SEAL AIR PUMP#1 MOTOR	(LATER)	NO	20	460	16.4	20.2	25.4	27.0	0.910	0.810	FVNR	2	-	2	1.00	16.4	20.2	25.4		
SEAL AIR PUMP#2 MOTOR	(LATER)	NO	20	460	16.4	20.2	25.4	27.0	0.910	0.810	FVNR	2	-	2	1.00	16.4	20.2	25.4		
SEAL AIR PUMP#3 MOTOR	(LATER)	NO	20	460	16.4	20.2	25.4	27.0	0.910	0.810	FVNR	2	-	2	1.00	16.4	20.2	25.4		
SEAL AIR PUMP#4 MOTOR	(LATER)	NO	20	460	16.4	20.2	25.4	27.0	0.910	0.810	FVNR	2	-	2	1.00	16.4	20.2	25.4		
SEAL AIR PUMP#5 MOTOR	(LATER)	NO	20	460	16.4	20.2	25.4	27.0	0.910	0.810	FVNR	2	-	2	1.00	16.4	20.2	25.4		
SEAL AIR PUMP#6 MOTOR	(LATER)	NO	20	460	16.4	20.2	25.4	27.0	0.910	0.810	FVNR	2	-	2	1.00	16.4	20.2	25.4		
DCC RECIRC WATER PUMP#1 MOTOR	(LATER)	YES	200	460	157.0	180.4	226.5	240.0	0.950	0.870	FVNR	5	-	5	1.00	157.0	180.4	226.5		
DCC RECIRC WATER PUMP#2 MOTOR	(LATER)	YES	200	460	157.0	180.4	226.5	240.0	0.950	0.870	FVNR	5	-	5	1.00	157.0	180.4	226.5		
DCC RECIRC WATER PUMP#3 MOTOR	(LATER)	YES	200	460	157.0	180.4	226.5	240.0	0.950	0.870	FVNR	5	-	5	1.00	157.0	180.4	226.5		
CARBON CAPTURE ISOLATION DAMPER #1 MOTOR	(LATER)	YES	75	460	59.4	69.9	87.8	96.0	0.941	0.850	FVNR	4	-	4	1.00	59.4	69.9	87.8		
CARBON CAPTURE ISOLATION DAMPER #2 MOTOR	(LATER)	YES	75	460	59.4	69.9	87.8	96.0	0.941	0.850	FVNR	4	-	4	1.00	59.4	69.9	87.8		
HRSG STACK ISOLATION DAMPER #2 Motor	(LATER)	YES	75	460	59.4	69.9	87.8	96.0	0.941	0.850	FVNR	4	-	4	1.00	59.4	69.9	87.8		
BLOWER SUCTION MOTOR DAMPER	(LATER)	NO	20	460	16.4	20.2	25.4	27.0	0.910	0.810	FVNR	2	-	2	1.00	16.4	20.2	25.4		
MAKEUP WATER VALVE MOTOR	(LATER)	NO	5	460	4.3	5.2	6.5	7.6	0.875	0.820	FVNR	1	-	2	1.00	4.3	5.2	6.5		
EGR 240/120V PANEL #1	6Z-LVD-PPL-2211			480	54.0	54.0	65.0		1.000	1.000	Dual Bkr	125	100	1	0.80	43.2	43.2	52.0	COLOCATED 480V:240/120V TRANSFORMER	
SPARE - PER CONTRACT				460							FVNR	2		2						
SPARE SIZE 1 STARTER				460							FVNR	1		2						
SPARE 20A BKR				480							Dual Bkr	125	20	1						
SPARE 30A BKR				480							Dual Bkr	125	30	1						
FUTURE 12" SPACE				480										2						
6Z-LVB-MCC-221 SUBTOTALS								NUMBER OF SECTIONS (W/O MAIN BREAKER)						5		811	980	1179	BUS PF	0.83
			CONNECTED LOAD		756.7	906.6	1090.4									PERCENT LOADED=		73.7%	PERCENT CONSTANT KVA	83%

LOAD	TAG ID	MOTOR SPACE HTR REQUIRED?	HP	VOLTS	FL KW	FL KVA	FL AMPS	NEC 430.250 FLA	FL EFF	FL P.F.	TYPE	FRAME SIZE	BREAKER SIZE	SPACE	DEMAND	DEMAND KW	DEMAND KVA	DEMAND AMPS	COMMENTS	
65 KA	6Z-LVB-MCC-222																			
BUS SIZE (AMPS) = 1600																				
SEAL AIR PUMP#1 MOTOR	(LATER)	NO	20	460	16.4	20.2	25.4	27.0	0.910	0.810	FVNR	2	-	2	1.00	16.4	20.2	25.4		
SEAL AIR PUMP#2 MOTOR	(LATER)	NO	20	460	16.4	20.2	25.4	27.0	0.910	0.810	FVNR	2	-	2	1.00	16.4	20.2	25.4		
SEAL AIR PUMP#3 MOTOR	(LATER)	NO	20	460	16.4	20.2	25.4	27.0	0.910	0.810	FVNR	2	-	2	1.00	16.4	20.2	25.4		
SEAL AIR PUMP#4 MOTOR	(LATER)	NO	20	460	16.4	20.2	25.4	27.0	0.910	0.810	FVNR	2	-	2	1.00	16.4	20.2	25.4		
SEAL AIR PUMP#5 MOTOR	(LATER)	NO	20	460	16.4	20.2	25.4	27.0	0.910	0.810	FVNR	2	-	2	1.00	16.4	20.2	25.4		
SEAL AIR PUMP#6 MOTOR	(LATER)	NO	20	460	16.4	20.2	25.4	27.0	0.910	0.810	FVNR	2	-	2	1.00	16.4	20.2	25.4		
DCC RECIRC WATER PUMP#1 MOTOR	(LATER)	YES	200	460	157.0	180.4	226.5	240.0	0.950	0.870	FVNR	5	-	5	1.00	157.0	180.4	226.5		
DCC RECIRC WATER PUMP#2 MOTOR	(LATER)	YES	200	460	157.0	180.4	226.5	240.0	0.950	0.870	FVNR	5	-	5	1.00	157.0	180.4	226.5		
DCC RECIRC WATER PUMP#3 MOTOR	(LATER)	YES	200	460	157.0	180.4	226.5	240.0	0.950	0.870	FVNR	5	-	5	1.00	157.0	180.4	226.5		
CARBON CAPTURE ISOLATION DAMPER #1 MOTOR	(LATER)	YES	75	460	59.4	69.9	87.8	96.0	0.941	0.850	FVNR	4	-	4	1.00	59.4	69.9	87.8		
CARBON CAPTURE ISOLATION DAMPER #2 MOTOR	(LATER)	YES	75	460	59.4	69.9	87.8	96.0	0.941	0.850	FVNR	4	-	4	1.00	59.4	69.9	87.8		
HRSG STACK ISOLATION DAMPER #2 Motor	(LATER)	YES	75	460	59.4	69.9	87.8	96.0	0.941	0.850	FVNR	4	-	4	1.00	59.4	69.9	87.8		
BLOWER SUCTION MOTOR DAMPER	(LATER)	NO	20	460	16.4	20.2	25.4	27.0	0.910	0.810	FVNR	2	-	2	1.00	16.4	20.2	25.4		
MAKEUP WATER VALVE MOTOR	(LATER)	NO	5	460	4.3	5.2	6.5	7.6	0.875	0.820	FVNR	1	-	2	1.00	4.3	5.2	6.5		
SPARE - PER CONTRACT				460							FVNR	2		2						
SPARE SIZE 1 STARTER				460							FVNR	1		2						
SPARE 20A BKR				480							Dual Bkr	125	20	1						
SPARE 30A BKR				480							Dual Bkr	125	30	1						
FUTURE 12" SPACE				480										2						
6Z-LVB-MCC-222 SUBTOTALS								NUMBER OF SECTIONS (W/O MAIN BREAKER)						5		768	937	1127	BUS PF	0.82
			CONNECTED LOAD		702.7	852.5	1025.4									PERCENT LOADED=		70.4%	PERCENT CONSTANT KVA	87%

APPENDICES

PROJECT: GE/Southern/Linde Advanced NGCC Integration
JOB NUMBER: 20041223

CALC NO CA-ELE-002

SUBJECT ELECTRICAL SYSTEMS ANALYSIS

BY Nick Mechler **DATE** 4/21/2023 **SHEET REV** 0

APPENDIX C

Description	No. of Pages
Motor Loading Data	(TBD)

APPENDICES

PROJECT: GE/Southern/Linde Advanced NGCC Integration
JOB NUMBER: 20041223

CALC NO CA-ELE-002

SUBJECT ELECTRICAL SYSTEMS ANALYSIS

BY Nick Mechler **DATE** 4/21/2023 **SHEET REV** 0

APPENDIX D

Description	No. of Pages
Utility Fault Information	4

[redacted]

Sent: Wednesday, February 1, 2023 9:34 AM

[redacted]

Subject: [EXTERNAL] RE: GE/Southern - Barry 6 CCS Study - Electrical Coordination

[redacted]

Here's the site-specific information you requested:

- Available three-phase fault current and X/R ratio at point of interconnection: 50kA, X/R = 29
- Available single-phase fault current and X/R ratio at point of interconnection: 52kA, X/R = 20
- Point of Interconnection Voltage and tolerance (e.g. 345 kV +/- 5%): Nominal voltage is 230kV. Normal operating range is roughly 235kV – 240kV
- Anticipated grid fault clearing time: 3 cycles total for fault in collector substation (1 cycle relay time + 2 cycle breaker operate time)

Please let me know if there are any follow-up questions.

[redacted]

Sent: Thursday, January 26, 2023 11:47 AM

[redacted]

Subject: RE: GE/Southern - Barry 6 CCS Study - Electrical Coordination

EXTERNAL MAIL: Caution Opening Links or Files

Thanks!

[redacted]

Sent: Thursday, January 26, 2023 10:46 AM

[redacted]

Subject: [EXTERNAL] RE: GE/Southern - Barry 6 CCS Study - Electrical Coordination

[redacted]

1

I'll admit, this was what I could pull together going the lone ranger route; I can ask our experts for clarification but it may take a little longer.

I'll ask about the X/R ratio.
The 2 seconds may have been a misinterpretation on my part of our large transformer standard. I will ask about this as well.

I don't think it is a bad idea to start with your standard assumptions and then just cross-check versus the feedback I receive.

[redacted]

Sent: Thursday, January 26, 2023 10:41 AM

[redacted]

Subject: RE: GE/Southern - Barry 6 CCS Study - Electrical Coordination

EXTERNAL MAIL: Caution Opening Links or Files

[redacted]

1. Will the X/R ratio be available? Or, should Kiewit proceed with an assumed value for now?
2. I notice that the fault clearing time is listed as 2 seconds. That's a pretty long time-just wanting to confirm that.

Thanks,

[redacted]

Sent: Thursday, January 26, 2023 9:52 AM

[redacted]

Subject: [EXTERNAL] RE: GE/Southern - Barry 6 CCS Study - Electrical Coordination

Here's what I've been able to collect, please let me know if there are further questions.

[redacted]

[redacted]

Sent: Thursday, January 26, 2023 8:24 AM

[redacted]

Subject: RE: GE/Southern - Barry 6 CCS Study - Electrical Coordination

[redacted]

This may end up being worth a follow-up call or at least follow-up questions from your team, but I can provide some general information off the bat and then we can regroup from there. The assumption should be that there will need to be a new substation to supply the capture island fed from existing Alabama Power 230kV transmission lines. I already know there isn't remotely enough existing substation capacity at the combined cycle site.

I will go ahead and see what all I can track down from our transmission folks about voltage tolerance range, fault current, and anticipated grid fault clearing time. If there are more (or less) questions based on starting with the assumption above, please let me know.

[redacted]

Sent: Wednesday, January 25, 2023 5:03 PM

[redacted]

Subject: GE/Southern - Barry 6 CCS Study - Electrical Coordination

EXTERNAL MAIL: Caution Opening Links or Files

[redacted]

Looking to start working on coordination for the main electrical interconnection. Initially looking for the information below.

- Do you have a location in mind for where we'd make the power supply tie-in?
- Can you provide some technical information at that connection point:
  - Available three-phase fault current and X/R ratio at point of interconnection
  - Available single-phase fault current and X/R ratio at point of interconnection
  - Point of Interconnection Voltage and tolerance (e.g. 345 kV +/- 5%)
  - Anticipated grid fault clearing time

Let us know if you think a breakout call for this topic might be helpful.

Thanks,

[redacted]

APPENDICES

PROJECT: GE/Southern/Linde Advanced NGCC Integration
JOB NUMBER: 20041223

CALC NO CA-ELE-002

SUBJECT ELECTRICAL SYSTEMS ANALYSIS

BY Nick Mechler **DATE** 4/21/2023 **SHEET REV** 0

APPENDIX E

Description	No. of Pages
Load Flow Study Reports	135

Project:	**ETAP**	Page:	1
Location:	20.6.0C	Date:	04-18-2023
Contract:		SN:	KIEWITRWN9
Engineer:	Study Case: LF NL NV	Revision:	Base
Filename: GE-Southern		Config.:	Normal

Electrical Transient Analyzer Program

Load Flow Analysis

Loading Category (2): NORMAL

Generation Category (2): NORMAL

Load Diversity Factor: Bus Maximum

	Swing	V-Control	Load	Total
Number of Buses:	1	0	37	38

	XFMR2	XFMR3	Reactor	Line/Cable/ Busway	Impedance	Tie PD	Total
Number of Branches:	5	0	0	31	0	1	37

Method of Solution:	Adaptive Newton-Raphson Method
Maximum No. of Iteration:	99
Precision of Solution:	0.0001000
System Frequency:	60.00 Hz
Unit System:	English
Project Filename:	GE-Southern
Output Filename:	\\kiewitplaza\kegi\Data\ES\20041223-FOA2515_GE_Southern_Linde_Advanced_NGCC_Integration\ENG\Engineering\Elec_Controls\Calcs\ETAP\GE-Southern\LF-1.lfr

Project:		ETAP		Page:	2
Location:		20.6.0C		Date:	04-18-2023
Contract:				SN:	KIEWITRWN9
Engineer:				Revision:	Base
Filename:	GE-Southern		Study Case: LF NL NV	Config.:	Normal

Adjustments

Tolerance	Apply Adjustments	Individual /Global	Percent
Transformer Impedance:	Yes	Individual	
Reactor Impedance:	Yes	Individual	
Overload Heater Resistance:	No		
Transmission Line Length:	Yes	Individual	
Cable / Busway Length:	Yes	Individual	

Temperature Correction	Apply Adjustments	Individual /Global	Degree C
Transmission Line Resistance:	Yes	Individual	
Cable / Busway Resistance:	Yes	Individual	

Project:		ETAP		Page:	3
Location:		20.6.0C		Date:	04-18-2023
Contract:				SN:	KIEWITRWN9
Engineer:				Revision:	Base
Filename:	GE-Southern		Study Case: LF NL NV	Config.:	Normal

Bus Input Data

Bus			Initial Voltage		Load							
					Constant kVA		Constant Z		Constant I		Generic	
ID	kV	Sub-sys	% Mag.	Ang.	MW	Mvar	MW	Mvar	MW	Mvar	MW	Mvar
6Z-LVB-MCC-121	0.480	1	100.0	0.0	0.616	0.365	0.317	0.188				
6Z-LVB-MCC-122	0.480	1	100.0	0.0	0.612	0.363	0.315	0.187				
6Z-LVB-MCC-123	0.480	1	100.0	0.0			0.917	0.186				
6Z-LVB-MCC-221	0.480	1	100.0	0.0	0.758	0.513	0.155	0.105				
6Z-LVB-MCC-222	0.480	1	100.0	0.0	0.758	0.513	0.155	0.105				
6Z-LVB-SWG-12	0.480	1	100.0	0.0								
6Z-LVB-SWG-22	0.480	1	100.0	0.0								
6Z-MVA-SWG-1	13.800	1	100.0	0.0								
6Z-MVA-SWG-2	13.800	1	100.0	0.0								
6Z-MVC-SWG-11	4.160	1	100.0	0.0								
6Z-MVC-SWG-21	4.160	1	100.0	0.0								
Bus2	4.000	1	100.0	0.0	0.179	0.125						
Bus6	13.200	1	100.0	0.0	3.908	1.536						
Bus7	13.800	1	100.0	0.0	36.867	22.848						
Bus8	4.160	1	100.0	0.0	1.564	0.638						
Bus9	4.160	1	100.0	0.0	1.564	0.638						
Bus18	4.000	1	100.0	0.0	0.179	0.125						
Bus20	4.000	1	100.0	0.0	0.179	0.125						
Bus21	4.000	1	100.0	0.0	0.179	0.125						
Bus22	4.000	1	100.0	0.0	0.179	0.125						
Bus23	4.000	1	100.0	0.0	0.179	0.125						
Bus24	4.000	1	100.0	0.0	0.179	0.125						
Bus25	4.000	1	100.0	0.0	0.179	0.125						
Bus26	4.000	1	100.0	0.0	0.179	0.125						
Bus28	13.200	1	100.0	0.0	3.908	1.536						
Bus29	4.000	1	100.0	0.0	0.360	0.152						
Bus43	4.000	1	100.0	0.0	0.179	0.125						
FIRE PUMP TAP BUS	0.480	1	100.0	0.0								
HV BUS	230.000	1	102.2	0.0								
MPT X WINDING	13.800	1	100.0	0.0								
SUS 11 Primary	13.800	1	100.0	0.0								
SUS 11 Secondary	4.160	1	100.0	0.0								
SUS 12 Primary	13.800	1	100.0	0.0								

Project:	ETAP	Page:	4
Location:	20.6.0C	Date:	04-18-2023
Contract:		SN:	KIEWITRWN9
Engineer:	Study Case: LF NL NV	Revision:	Base
Filename: GE-Southern		Config.:	Normal

Bus			Initial Voltage		Load							
					Constant kVA		Constant Z		Constant I		Generic	
ID	kV	Sub-sys	% Mag.	Ang.	MW	Mvar	MW	Mvar	MW	Mvar	MW	Mvar
SUS 12 Secondary	0.480	1	100.0	0.0								
SUS 21 PRIMARY	13.800	1	100.0	0.0								
SUS 21 SECONDARY	4.160	1	100.0	0.0								
SUS 22 PRIMARY	13.800	1	100.0	0.0								
SUS 22 SECONDARY	0.480	1	100.0	0.0								
Total Number of Buses: 38					52.705	30.348	1.860	0.772	0.000	0.000	0.000	0.000

Generation Bus				Voltage		Generation			Mvar Limits	
ID	kV	Type	Sub-sys	% Mag.	Angle	MW	Mvar	% PF	Max	Min
HV BUS	230.000	Swing	1	102.2	0.0					
						0.000	0.000			

Project:		ETAP		Page:	5
Location:		20.6.0C		Date:	04-18-2023
Contract:				SN:	KIEWITRWN9
Engineer:				Revision:	Base
Filename:	GE-Southern	Study Case: LF NL NV		Config.:	Normal

Line/Cable/Busway Input Data

ohms or siemens/1000 ft per Conductor (Cable) or per Phase (Line/Busway)

Line/Cable/Busway ID	Library	Size	Length Adj. (ft)	% Tol.	#/Phase	T (°C)	R	X	Y
6Z-CWS-MFN-01A-100	5.0NCUS1	1/0	800.0	0.0	1	75	0.127806	0.098000	
6Z-CWS-MFN-01B-100	5.0NCUS1	1/0	800.0	0.0	1	75	0.127806	0.098000	
6Z-CWS-MFN-01C-100	5.0NCUS1	1/0	850.0	0.0	1	75	0.127806	0.098000	
6Z-CWS-MFN-01D-100	5.0NCUS1	1/0	850.0	0.0	1	75	0.127806	0.098000	
6Z-CWS-MFN-01E-100	5.0NCUS1	1/0	900.0	0.0	1	75	0.127806	0.098000	
6Z-CWS-MFN-01F-100	5.0NCUS1	1/0	900.0	0.0	1	75	0.127806	0.098000	
6Z-CWS-MFN-01G-100	5.0NCUS1	1/0	950.0	0.0	1	75	0.127806	0.098000	
6Z-CWS-MFN-01H-100	5.0NCUS1	1/0	950.0	0.0	1	75	0.127806	0.098000	
6Z-CWS-MFN-01I-100	5.0NCUS1	1/0	1100.0	0.0	1	75	0.127806	0.098000	
6Z-CWS-MFN-01J-100	5.0NCUS1	1/0	1100.0	0.0	1	75	0.127806	0.098000	
6Z-CWS-MPM-01A-100	15NCUS1	500	500.0	0.0	1	75	0.033382	0.079000	
6Z-CWS-MPM-01B-100	15NCUS1	500	500.0	0.0	1	75	0.033382	0.079000	
6Z-CWS-MPM-02-100	5.0NCUS1	1/0	500.0	0.0	1	75	0.127806	0.098000	
6Z-LVB-BUS-22	0.6NCUN1	750	50.0	0.0	9	75	0.019400	0.035600	
6Z-LVB-MCC-121-200	0.6NCUN1	500	50.0	0.0	5	75	0.027000	0.039600	
6Z-LVB-MCC-122-200	0.6NCUN1	500	50.0	0.0	5	75	0.027000	0.039600	
6Z-LVB-MCC-123-200	0.6NCUN1	500	50.0	0.0	5	75	0.027000	0.039600	
6Z-LVB-MCC-221-200	0.6NCUN1	500	50.0	0.0	5	75	0.027600	0.037300	
6Z-LVB-MCC-222-200	0.6NCUN1	500	50.0	0.0	5	75	0.027600	0.037300	
6Z-MVA-BUS-1	15NCUN1	750	100.0	0.0	5	75	0.018503	0.034000	
6Z-MVA-BUS-12	0.6NCUN1	750	50.0	0.0	9	75	0.019000	0.038400	
6Z-MVA-SWG-2-100	15NCUS1	500	1500.0	0.0	1	75	0.033382	0.079000	
6Z-MVA-SWG-21-100	5.0NCUS3	500	50.0	0.0	3	75	0.028400	0.035100	
6Z-MVC-SWG-11-100	5.0NCUS1	500	50.0	0.0	3	75	0.026222	0.061417	
6Z-SUS-XFR-11-100	15NCUS1	500	50.0	0.0	1	75	0.028400	0.042100	
6Z-SUS-XFR-12-100	5.0NCUS1	350	50.0	0.0	1	75	0.037095	0.063246	
6Z-SUS-XFR-21-100	15NCUS1	500	50.0	0.0	1	75	0.033382	0.079000	
6Z-SUS-XFR-22-100	5.0NCUS3	500	100.0	0.0	1	75	0.028400	0.035100	
DCC1 FEEDER	5.0NCUS1	500	400.0	0.0	1	75	0.028400	0.042100	
DCC2 FEEDER	5.0NCUS1	500	400.0	0.0	1	75	0.028400	0.042100	
Linde 1 Feeder	15NCUS1	500	250.0	0.0	10	75	0.028400	0.042100	

Line / Cable / Busway resistances are listed at the specified temperatures.

Project:	ETAP	Page:	6
Location:	20.6.0C	Date:	04-18-2023
Contract:		SN:	KIEWITRWN9
Engineer:		Revision:	Base
Filename: GE-Southern	Study Case: LF NL NV	Config.:	Normal

2-Winding Transformer Input Data

Transformer		Rating					Z Variation			% Tap Setting		Adjusted	Phase Shift	
ID	Phase	MVA	Prim. kV	Sec. kV	% Z1	X1/R1	+ 5%	- 5%	% Tol.	Prim.	Sec.	% Z	Type	Angle
6Z-MPT-XFR-1	3-Phase	43.000	230.000	13.800	10.50	29.50	0	0	7.5	0	0	11.2875	Dyn	0.000
6Z-SUS-XFR-11	3-Phase	7.000	13.800	4.160	6.50	13.55	0	0	7.5	-2.500	0	6.9875	Dyn	0.000
6Z-SUS-XFR-12	3-Phase	2.500	13.800	0.480	5.75	10.67	0	0	7.5	-2.500	0	6.1813	Dyn	0.000
6Z-SUS-XFR-21	3-Phase	7.000	13.800	4.160	6.50	13.55	0	0	7.5	-2.500	0	6.9875	Dyn	0.000
6Z-SUS-XFR-22	3-Phase	2.500	13.800	0.480	5.75	10.67	0	0	7.5	-2.500	0	6.1813	Dyn	0.000

2-Winding Transformer Load Tap Changer (LTC) Settings

Transformer	Connected Buses ("*" LTC Side)		Transformer Load Tap Changer Setting					
ID	Primary Bus ID	Secondary Bus ID	% Min. Tap	% Max. Tap	% Step	Regulated Bus ID	% V	kV
6Z-MPT-XFR-1	* IIV BUS	MPT X WINDING	-10.00	10.00	0.625	MPT X WINDING	100.00	13.800

Project:	ETAP	Page:	7
Location:	20.6.0C	Date:	04-18-2023
Contract:		SN:	KIEWITRWN9
Engineer:		Revision:	Base
Filename: GE-Southern	Study Case: LF NL NV	Config.:	Normal

Branch Connections

CKT/Branch		Connected Bus ID		% Impedance, Pos. Seq., 100 MVA Base			
ID	Type	From Bus	To Bus	R	X	Z	Y
6Z-MPT-XFR-1	2W XFMR	HV BUS	MPT X WINDING	0.89	26.23	26.25	
6Z-SUS-XFR-11	2W XFMR	SUS 11 Primary	SUS 11 Secondary	7.16	97.06	97.33	
6Z-SUS-XFR-12	2W XFMR	SUS 12 Primary	SUS 12 Secondary	22.49	240.02	241.07	
6Z-SUS-XFR-21	2W XFMR	SUS 21 PRIMARY	SUS 21 SECONDARY	7.16	97.06	97.33	
6Z-SUS-XFR-22	2W XFMR	SUS 22 PRIMARY	SUS 22 SECONDARY	22.49	240.02	241.07	
6Z-CWS-MFN-01A-100	Cable	6Z-MVC-SWG-11	Bus18	59.08	45.30	74.45	
6Z-CWS-MFN-01B-100	Cable	6Z-MVC-SWG-11	Bus20	59.08	45.30	74.45	
6Z-CWS-MFN-01C-100	Cable	6Z-MVC-SWG-11	Bus21	62.77	48.13	79.10	
6Z-CWS-MFN-01D-100	Cable	6Z-MVC-SWG-11	Bus26	62.77	48.13	79.10	
6Z-CWS-MFN-01E-100	Cable	6Z-MVC-SWG-11	Bus22	66.47	50.97	83.76	
6Z-CWS-MFN-01F-100	Cable	6Z-MVC-SWG-11	Bus23	66.47	50.97	83.76	
6Z-CWS-MFN-01G-100	Cable	6Z-MVC-SWG-11	Bus24	70.16	53.80	88.41	
6Z-CWS-MFN-01H-100	Cable	6Z-MVC-SWG-11	Bus25	70.16	53.80	88.41	
6Z-CWS-MFN-01I-100	Cable	6Z-MVC-SWG-11	Bus43	81.24	62.29	102.37	
6Z-CWS-MFN-01J-100	Cable	6Z-MVC-SWG-11	Bus2	81.24	62.29	102.37	
6Z-CWS-MPM-01A-100	Cable	6Z-MVA-SWG-1	Bus6	0.88	2.07	2.25	
6Z-CWS-MPM-01B-100	Cable	6Z-MVA-SWG-1	Bus28	0.88	2.07	2.25	
6Z-CWS-MPM-02-100	Cable	6Z-MVC-SWG-11	Bus29	36.93	28.31	46.53	
6Z-LVB-BUS-22	Cable	SUS 22 SECONDARY	6Z-LVB-SWG-22	4.68	8.58	9.78	
6Z-LVB-MCC-121-200	Cable	6Z-LVB-SWG-12	6Z-LVB-MCC-121	11.72	17.19	20.80	
6Z-LVB-MCC-122-200	Cable	6Z-LVB-SWG-12	6Z-LVB-MCC-122	11.72	17.19	20.80	
6Z-LVB-MCC-123-200	Cable	6Z-LVB-SWG-12	6Z-LVB-MCC-123	11.72	17.19	20.80	
6Z-LVB-MCC-221-200	Cable	6Z-LVB-SWG-22	6Z-LVB-MCC-221	11.98	16.19	20.14	
6Z-LVB-MCC-222-200	Cable	6Z-LVB-SWG-22	6Z-LVB-MCC-222	11.98	16.19	20.14	
6Z-MVA-BUS-1	Cable	MPT X WINDING	6Z-MVA-SWG-1	0.02	0.04	0.04	
6Z-MVA-BUS-12	Cable	SUS 12 Secondary	FIRE PUMP TAP BUS	4.58	9.26	10.33	
6Z-MVA-SWG-2-100	Cable	6Z-MVA-SWG-1	6Z-MVA-SWG-2	2.63	6.22	6.76	
6Z-MVA-SWG-21-100	Cable	SUS 21 SECONDARY	6Z-MVC-SWG-21	0.27	0.34	0.43	
6Z-MVC-SWG-11-100	Cable	SUS 11 Secondary	6Z-MVC-SWG-11	0.25	0.59	0.64	
6Z-SUS-XFR-11-100	Cable	6Z-MVA-SWG-1	SUS 11 Primary	0.07	0.11	0.13	
6Z-SUS-XFR-12-100	Cable	6Z-MVA-SWG-1	SUS 12 Primary	0.10	0.17	0.19	
6Z-SUS-XFR-21-100	Cable	6Z-MVA-SWG-2	SUS 21 PRIMARY	0.09	0.21	0.23	
6Z-SUS-XFR-22-100	Cable	6Z-MVA-SWG-2	SUS 22 PRIMARY	0.15	0.18	0.24	
DCC1 FEEDER	Cable	6Z-MVC-SWG-21	Bus8	6.56	9.73	11.74	
DCC2 FEEDER	Cable	6Z-MVC-SWG-21	Bus9	6.56	9.73	11.74	
Linde 1 Feeder	Cable	6Z-MVA-SWG-1	Bus7	0.04	0.06	0.07	

Project:		ETAP		Page:	8
Location:		20.6.0C		Date:	04-18-2023
Contract:				SN:	KIEWITRWN9
Engineer:				Revision:	Base
Filename:	GE-Southern		Study Case: LF NL NV	Config.:	Normal

CKT/Branch		Connected Bus ID		% Impedance, Pos. Seq., 100 MVA Base			
ID	Type	From Bus	To Bus	R	X	Z	Y
CB12	Tie Breakr	FIRE PUMP TAP BUS	6Z-LVB-SWG-12				

Project:		ETAP		Page:	9
Location:		20.6.0C		Date:	04-18-2023
Contract:				SN:	KIEWITRWN9
Engineer:				Revision:	Base
Filename:	GE-Southern		Study Case: LF NL NV	Config.:	Normal

LOAD FLOW REPORT

Bus		Voltage		Generation		Load		Load Flow					XFMR
ID	kV	% Mag.	Ang.	MW	Mvar	MW	Mvar	ID	MW	Mvar	Amp	%PF	%Tap
6Z-LVB-MCC-121	0.480	97.228	-11.3	0.000	0.000	0.916	0.543	6Z-LVB-SWG-12	-0.916	-0.543	1317.3	86.0	
6Z-LVB-MCC-122	0.480	97.229	-11.3	0.000	0.000	0.910	0.540	6Z-LVB-SWG-12	-0.910	-0.540	1309.3	86.0	
6Z-LVB-MCC-123	0.480	97.299	-11.3	0.000	0.000	0.868	0.176	6Z-LVB-SWG-12	-0.868	-0.176	1094.6	98.0	
6Z-LVB-MCC-221	0.480	97.391	-10.1	0.000	0.000	0.905	0.613	6Z-LVB-SWG-22	-0.905	-0.613	1350.0	82.8	
6Z-LVB-MCC-222	0.480	97.391	-10.1	0.000	0.000	0.905	0.613	6Z-LVB-SWG-22	-0.905	-0.613	1350.0	82.8	
6Z-LVB-SWG-12	0.480	97.434	-11.2	0.000	0.000	0.000	0.000	6Z-LVB-MCC-121	0.917	0.545	1317.3	85.9	
								6Z-LVB-MCC-122	0.912	0.542	1309.3	85.9	
								6Z-LVB-MCC-123	0.869	0.178	1094.6	98.0	
								FIRE PUMP TAP BUS	-2.697	-1.265	3678.0	90.5	
6Z-LVB-SWG-22	0.480	97.604	-10.1	0.000	0.000	0.000	0.000	SUS 22 SECONDARY	-1.813	-1.230	2700.0	82.8	
								6Z-LVB-MCC-221	0.907	0.615	1350.0	82.8	
								6Z-LVB-MCC-222	0.907	0.615	1350.0	82.8	
6Z-MVA-SWG-1	13.800	99.200	-7.5	0.000	0.000	0.000	0.000	Bus6	3.909	1.540	177.2	93.0	
								Bus28	3.909	1.540	177.2	93.0	
								MPT X WINDING	-54.552	-31.683	2660.6	86.5	
								6Z-MVA-SWG-2	4.976	2.775	240.3	87.3	
								SUS 11 Primary	2.159	1.467	110.1	82.7	
								SUS 12 Primary	2.723	1.504	131.2	87.5	
								Bus7	36.874	22.859	1829.7	85.0	
6Z-MVA-SWG-2	13.800	98.894	-7.6	0.000	0.000	0.000	0.000	6Z-MVA-SWG-1	-4.968	-2.754	240.3	87.5	
								SUS 21 PRIMARY	3.141	1.396	145.4	91.4	
								SUS 22 PRIMARY	1.827	1.358	96.3	80.3	
6Z-MVC-SWG-11	4.160	100.156	-8.6	0.000	0.000	0.000	0.000	Bus18	0.179	0.125	30.3	82.1	
								Bus20	0.179	0.125	30.3	82.1	
								Bus21	0.179	0.125	30.3	82.1	
								Bus26	0.179	0.125	30.3	82.1	
								Bus22	0.179	0.125	30.3	82.1	
								Bus23	0.179	0.125	30.3	82.1	
								Bus24	0.179	0.125	30.3	82.1	
								Bus25	0.179	0.125	30.3	82.1	
								Bus43	0.179	0.125	30.3	82.1	

Project:		ETAP		Page:	10
Location:		20.6.0C		Date:	04-18-2023
Contract:				SN:	KIEWITRWN9
Engineer:				Revision:	Base
Filename:	GE-Southern		Study Case: LF NL NV	Config.:	Normal

Bus		Voltage		Generation		Load		Load Flow					XFMR
ID	kV	% Mag.	Ang.	MW	Mvar	MW	Mvar	ID	MW	Mvar	Amp	%PF	%Tap
								Bus2	0.179	0.125	30.3	82.1	
								Bus29	0.361	0.153	54.3	92.1	
								SUS 11 Secondary	-2.154	-1.401	356.1	83.8	
6Z-MVC-SWG-21	4.160	99.859	-9.3	0.000	0.000	0.000	0.000	SUS 21 SECONDARY	-3.132	-1.281	470.2	92.6	
								Bus8	1.566	0.640	235.1	92.6	
								Bus9	1.566	0.640	235.1	92.6	
Bus2	4.000	103.930	-8.6	0.000	0.000	0.179	0.125	6Z-MVC-SWG-11	-0.179	-0.125	30.3	82.1	
Bus6	13.200	103.639	-7.5	0.000	0.000	3.908	1.536	6Z-MVA-SWG-1	-3.908	-1.536	177.2	93.1	
Bus7	13.800	99.173	-7.5	0.000	0.000	36.867	22.848	6Z-MVA-SWG-1	-36.867	-22.848	1829.7	85.0	
Bus8	4.160	99.693	-9.4	0.000	0.000	1.564	0.638	6Z-MVC-SWG-21	-1.564	-0.638	235.1	92.6	
Bus9	4.160	99.693	-9.4	0.000	0.000	1.564	0.638	6Z-MVC-SWG-21	-1.564	-0.638	235.1	92.6	
Bus18	4.000	103.993	-8.6	0.000	0.000	0.179	0.125	6Z-MVC-SWG-11	-0.179	-0.125	30.3	82.1	
Bus20	4.000	103.993	-8.6	0.000	0.000	0.179	0.125	6Z-MVC-SWG-11	-0.179	-0.125	30.3	82.1	
Bus21	4.000	103.983	-8.6	0.000	0.000	0.179	0.125	6Z-MVC-SWG-11	-0.179	-0.125	30.3	82.1	
Bus22	4.000	103.972	-8.6	0.000	0.000	0.179	0.125	6Z-MVC-SWG-11	-0.179	-0.125	30.3	82.1	
Bus23	4.000	103.972	-8.6	0.000	0.000	0.179	0.125	6Z-MVC-SWG-11	-0.179	-0.125	30.3	82.1	
Bus24	4.000	103.962	-8.6	0.000	0.000	0.179	0.125	6Z-MVC-SWG-11	-0.179	-0.125	30.3	82.1	
Bus25	4.000	103.962	-8.6	0.000	0.000	0.179	0.125	6Z-MVC-SWG-11	-0.179	-0.125	30.3	82.1	
Bus26	4.000	103.983	-8.6	0.000	0.000	0.179	0.125	6Z-MVC-SWG-11	-0.179	-0.125	30.3	82.1	
Bus28	13.200	103.639	-7.5	0.000	0.000	3.908	1.536	6Z-MVA-SWG-1	-3.908	-1.536	177.2	93.1	
Bus29	4.000	103.979	-8.6	0.000	0.000	0.360	0.152	6Z-MVC-SWG-11	-0.360	-0.152	54.3	92.1	
Bus43	4.000	103.930	-8.6	0.000	0.000	0.179	0.125	6Z-MVC-SWG-11	-0.179	-0.125	30.3	82.1	
FIRE PUMP TAP BUS	0.480	97.434	-11.2	0.000	0.000	0.000	0.000	SUS 12 Secondary	-2.697	-1.265	3678.0	90.5	
								6Z-LVB-SWG-12	2.697	1.265	3678.0	90.5	
* IIV BUS	230.000	102.200	0.0	54.920	42.308	0.000	0.000	MPT X WINDING	54.920	42.308	170.3	79.2	-6.250
MPT X WINDING	13.800	99.222	-7.5	0.000	0.000	0.000	0.000	6Z-MVA-SWG-1	54.560	31.698	2660.6	86.5	
								IIV BUS	-54.560	-31.698	2660.6	86.5	
SUS 11 Primary	13.800	99.197	-7.5	0.000	0.000	0.000	0.000	6Z-MVA-SWG-1	-2.159	-1.467	110.1	82.7	
								SUS 11 Secondary	2.159	1.467	110.1	82.7	-2.500
SUS 11 Secondary	4.160	100.170	-8.6	0.000	0.000	0.000	0.000	6Z-MVC-SWG-11	2.155	1.401	356.1	83.8	
								SUS 11 Primary	-2.155	-1.401	356.1	83.8	
SUS 12 Primary	13.800	99.195	-7.5	0.000	0.000	0.000	0.000	6Z-MVA-SWG-1	-2.723	-1.504	131.2	87.5	
								SUS 12 Secondary	2.723	1.504	131.2	87.5	-2.500

Project:	ETAP	Page:	11
Location:	20.6.0C	Date:	04-18-2023
Contract:		SN:	KIEWITRWN9
Engineer:	Study Case: LF NL NV	Revision:	Base
Filename: GE-Southern		Config.:	Normal

Bus		Voltage		Generation		Load		Load Flow					XFMR
ID	kV	% Mag.	Ang.	MW	Mvar	MW	Mvar	ID	MW	Mvar	Amp	%PF	%Tap
SUS 12 Secondary	0.480	97.682	-11.1	0.000	0.000	0.000	0.000	FIRE PUMP TAP BUS	2.702	1.274	3678.0	90.5	
								SUS 12 Primary	-2.702	-1.274	3678.0	90.5	
SUS 21 PRIMARY	13.800	98.889	-7.6	0.000	0.000	0.000	0.000	6Z-MVA-SWG-2	-3.140	-1.396	145.4	91.4	
								SUS 21 SECONDARY	3.140	1.396	145.4	91.4	-2.500
SUS 21 SECONDARY	4.160	99.872	-9.3	0.000	0.000	0.000	0.000	6Z-MVC-SWG-21	3.132	1.281	470.2	92.6	
								SUS 21 PRIMARY	-3.132	-1.281	470.2	92.6	
SUS 22 PRIMARY	13.800	98.889	-7.6	0.000	0.000	0.000	0.000	6Z-MVA-SWG-2	-1.827	-1.358	96.3	80.3	
								SUS 22 SECONDARY	1.827	1.358	96.3	80.3	-2.500
SUS 22 SECONDARY	0.480	97.799	-10.0	0.000	0.000	0.000	0.000	6Z-LVB-SWG-22	1.816	1.234	2700.0	82.7	
								SUS 22 PRIMARY	-1.816	-1.234	2700.0	82.7	

* Indicates a voltage regulated bus (voltage controlled or swing type machine connected to it)

# Indicates a bus with a load mismatch of more than 0.1 MVA

Project:	ETAP	Page:	12
Location:	20.6.0C	Date:	04-18-2023
Contract:		SN:	KIEWITRWN9
Engineer:	Study Case: LF NL NV	Revision:	Base
Filename: GE-Southern		Config.:	Normal

Bus Loading Summary Report

Bus			Directly Connected Load								Total Bus Load			
			Constant kVA		Constant Z		Constant I		Generic					Percent
ID	kV	Rated Amp	MW	Mvar	MW	Mvar	MW	Mvar	MW	Mvar	MVA	% PF	Amp	Loading
6Z-LVB-MCC-121	0.480	1600.0	0.616	0.365	0.300	0.178					1.065	86.0	1317.3	82.3
6Z-LVB-MCC-122	0.480	1600.0	0.612	0.363	0.298	0.177					1.058	86.0	1309.3	81.8
6Z-LVB-MCC-123	0.480	1600.0			0.868	0.176					0.885	98.0	1094.6	68.4
6Z-LVB-MCC-221	0.480	1600.0	0.758	0.513	0.147	0.100					1.093	82.8	1350.0	84.4
6Z-LVB-MCC-222	0.480	1600.0	0.758	0.513	0.147	0.100					1.093	82.8	1350.0	84.4
6Z-LVB-SWG-12	0.480	4000.0									2.979	90.5	3678.0	92.0
6Z-LVB-SWG-22	0.480	4000.0									2.191	82.8	2700.0	67.5
6Z-MVA-SWG-1	13.800	3000.0									63.085	86.5	2660.6	88.7
6Z-MVA-SWG-2	13.800	1200.0									5.680	87.5	240.3	20.0
6Z-MVC-SWG-11	4.160	1200.0									2.570	83.8	356.1	29.7
6Z-MVC-SWG-21	4.160	1200.0									3.384	92.6	470.2	39.2
Bus2	4.000		0.179	0.125							0.218	82.1	30.3	
Bus6	13.200		3.908	1.536							4.199	93.1	177.2	
Bus7	13.800		36.867	22.848							43.373	85.0	1829.7	
Bus8	4.160		1.564	0.638							1.689	92.6	235.1	
Bus9	4.160		1.564	0.638							1.689	92.6	235.1	
Bus18	4.000		0.179	0.125							0.218	82.1	30.3	
Bus20	4.000		0.179	0.125							0.218	82.1	30.3	
Bus21	4.000		0.179	0.125							0.218	82.1	30.3	
Bus22	4.000		0.179	0.125							0.218	82.1	30.3	
Bus23	4.000		0.179	0.125							0.218	82.1	30.3	
Bus24	4.000		0.179	0.125							0.218	82.1	30.3	
Bus25	4.000		0.179	0.125							0.218	82.1	30.3	
Bus26	4.000		0.179	0.125							0.218	82.1	30.3	
Bus28	13.200		3.908	1.536							4.199	93.1	177.2	
Bus29	4.000		0.360	0.152							0.391	92.1	54.3	
Bus43	4.000		0.179	0.125							0.218	82.1	30.3	
FIRE PUMP TAP BUS	0.480										2.979	90.5	3678.0	
HV BUS	230.000										69.326	79.2	170.3	
MPT X WINDING	13.800										63.099	86.5	2660.6	
SUS 11 Primary	13.800										2.610	82.7	110.1	
SUS 11 Secondary	4.160										2.570	83.8	356.1	
SUS 12 Primary	13.800										3.111	87.5	131.2	
SUS 12 Secondary	0.480										2.987	90.5	3678.0	
SUS 21 PRIMARY	13.800										3.437	91.4	145.4	
SUS 21 SECONDARY	4.160										3.384	92.6	470.2	
SUS 22 PRIMARY	13.800										2.277	80.3	96.3	
SUS 22 SECONDARY	0.480										2.195	82.7	2700.0	

Project:		ETAP		Page:	13
Location:		20.6.0C		Date:	04-18-2023
Contract:				SN:	KIEWITRWN9
Engineer:				Revision:	Base
Filename:	GE-Southern	Study Case: LF NL NV		Config.:	Normal

Bus			Directly Connected Load								Total Bus Load			
			Constant kVA		Constant Z		Constant I		Generic					
ID	kV	Rated Amp	MW	Mvar	MW	Mvar	MW	Mvar	MW	Mvar	MVA	% PF	Amp	Percent Loading

* Indicates operating load of a bus exceeds the bus critical limit (100.0% of the Continuous Ampere rating).
\# Indicates operating load of a bus exceeds the bus marginal limit (98.0% of the Continuous Ampere rating).

Project:		ETAP		Page:	14
Location:		20.6.0C		Date:	04-18-2023
Contract:				SN:	KIEWITRWN9
Engineer:				Revision:	Base
Filename:	GE-Southern		Study Case: LF NL NV	Config.:	Normal

Branch Loading Summary Report

CKT / Branch		Busway / Cable & Reactor			Transformer				
		Ampacity	Loading		Capability	Loading (input)		Loading (output)	
ID	Type	(Amp)	Amp	%	(MVA)	MVA	%	MVA	%
6Z-CWS-MFN-01A-100	Cable	124.58	30.27	24.30					
6Z-CWS-MFN-01B-100	Cable	124.58	30.27	24.30					
6Z-CWS-MFN-01C-100	Cable	124.58	30.27	24.30					
6Z-CWS-MFN-01D-100	Cable	124.58	30.27	24.30					
6Z-CWS-MFN-01E-100	Cable	124.58	30.28	24.30					
6Z-CWS-MFN-01F-100	Cable	124.58	30.28	24.30					
6Z-CWS-MFN-01G-100	Cable	124.58	30.28	24.31					
6Z-CWS-MFN-01H-100	Cable	124.58	30.28	24.31					
6Z-CWS-MFN-01I-100	Cable	124.58	30.29	24.31					
6Z-CWS-MFN-01J-100	Cable	124.58	30.29	24.31					
6Z-CWS-MPM-01A-100	Cable	448.89	177.20	39.47					
6Z-CWS-MPM-01B-100	Cable	448.89	177.20	39.47					
6Z-CWS-MPM-02-100	Cable	124.58	54.27	43.56					
6Z-LVB-BUS-22	Cable	5043.36	2699.97	53.54					
6Z-LVB-MCC-121-200	Cable	1965.13	1317.26	67.03					
6Z-LVB-MCC-122-200	Cable	1965.13	1309.30	66.63					
6Z-LVB-MCC-123-200	Cable	1965.13	1094.61	55.70					
6Z-LVB-MCC-221-200	Cable	1943.66	1349.98	69.46					
6Z-LVB-MCC-222-200	Cable	1943.66	1349.98	69.46					
6Z-MVA-BUS-1	Cable	3294.23	2660.58	80.76					
6Z-MVA-BUS-12	Cable	5096.18	3678.01	72.17					
6Z-MVA-SWG-2-100	Cable	448.89	240.30	53.53					
6Z-MVA-SWG-21-100	Cable	1161.03	470.25	40.50					
6Z-MVC-SWG-11-100	Cable	1730.77	356.08	20.57					
6Z-SUS-XFR-11-100	Cable	514.72	110.09	21.39					
6Z-SUS-XFR-12-100	Cable	437.12	131.21	30.02					
6Z-SUS-XFR-21-100	Cable	448.89	145.39	32.39					
6Z-SUS-XFR-22-100	Cable	387.01	96.32	24.89					
DCC1 FEEDER	Cable	444.45	235.12	52.90					
DCC2 FEEDER	Cable	444.45	235.12	52.90					
Linde 1 Feeder	Cable	5147.16	1829.72	35.55					
6Z-MPT-XFR-1	Transformer				71.668	69.326	96.7	63.099	88.0
6Z-SUS-XFR-11	Transformer				8.750	2.610	29.8	2.570	29.4

Project:		ETAP		Page:	15
Location:		20.6.0C		Date:	04-18-2023
Contract:				SN:	KIEWITRWN9
Engineer:				Revision:	Base
Filename:	GE-Southern		Study Case: LF NL NV	Config.:	Normal

CKT / Branch		Busway / Cable & Reactor			Transformer				
						Loading (input)		Loading (output)	
ID	Type	Ampacity (Amp)	Loading Amp	%	Capability (MVA)	MVA	%	MVA	%
6Z-SUS-XFR-12	Transformer				3.333	3.111	93.3	2.987	89.6
6Z-SUS-XFR-21	Transformer				8.750	3.437	39.3	3.384	38.7
6Z-SUS-XFR-22	Transformer				3.333	2.277	68.3	2.195	65.9

* Indicates a branch with operating load exceeding the branch capability.

Project:		ETAP		Page:	16
Location:		20.6.0C		Date:	04-18-2023
Contract:				SN:	KIEWITRWN9
Engineer:				Revision:	Base
Filename:	GE-Southern		Study Case: LF NL NV	Config.:	Normal

Branch Losses Summary Report

Branch ID	From-To Bus Flow		To-From Bus Flow		Losses		% Bus Voltage		Vd % Drop
	MW	Mvar	MW	Mvar	kW	kvar	From	To	in Vmag
6Z-CWS-MFN-01A-100	0.179	0.125	-0.179	-0.125	0.3	0.2	100.2	104.0	0.16
6Z-CWS-MFN-01B-100	0.179	0.125	-0.179	-0.125	0.3	0.2	100.2	104.0	0.16
6Z-CWS-MFN-01C-100	0.179	0.125	-0.179	-0.125	0.3	0.2	100.2	104.0	0.17
6Z-CWS-MFN-01D-100	0.179	0.125	-0.179	-0.125	0.3	0.2	100.2	104.0	0.17
6Z-CWS-MFN-01E-100	0.179	0.125	-0.179	-0.125	0.3	0.2	100.2	104.0	0.18
6Z-CWS-MFN-01F-100	0.179	0.125	-0.179	-0.125	0.3	0.2	100.2	104.0	0.18
6Z-CWS-MFN-01G-100	0.179	0.125	-0.179	-0.125	0.3	0.3	100.2	104.0	0.19
6Z-CWS-MFN-01H-100	0.179	0.125	-0.179	-0.125	0.3	0.3	100.2	104.0	0.19
6Z-CWS-MFN-01I-100	0.179	0.125	-0.179	-0.125	0.4	0.3	100.2	103.9	0.22
6Z-CWS-MFN-01J-100	0.179	0.125	-0.179	-0.125	0.4	0.3	100.2	103.9	0.22
6Z-CWS-MPM-01A-100	3.909	1.540	-3.908	-1.536	1.6	3.7	99.2	103.6	0.07
6Z-CWS-MPM-01B-100	3.909	1.540	-3.908	-1.536	1.6	3.7	99.2	103.6	0.07
6Z-CWS-MPM-02-100	0.361	0.153	-0.360	-0.152	0.6	0.4	100.2	104.0	0.18
6Z-LVB-BUS-22	-1.813	-1.230	1.816	1.234	2.4	4.3	97.6	97.8	0.20
6Z-LVB-MCC-121-200	-0.916	-0.543	0.917	0.545	1.4	2.1	97.2	97.4	0.21
6Z-LVB-MCC-122-200	-0.910	-0.540	0.912	0.542	1.4	2.0	97.2	97.4	0.21
6Z-LVB-MCC-123-200	-0.868	-0.176	0.869	0.178	1.0	1.4	97.3	97.4	0.14
6Z-LVB-MCC-221-200	-0.905	-0.613	0.907	0.615	1.5	2.0	97.4	97.6	0.21
6Z-LVB-MCC-222-200	-0.905	-0.613	0.907	0.615	1.5	2.0	97.4	97.6	0.21
6Z-MPT-XFR-1	54.920	42.308	-54.560	-31.698	359.7	10609.9	102.2	99.2	2.98
6Z-MVA-BUS-1	-54.552	-31.683	54.560	31.698	7.9	14.4	99.2	99.2	0.02
6Z-MVA-BUS-12	-2.697	-1.265	2.702	1.274	4.3	8.7	97.4	97.7	0.25
6Z-MVA-SWG-2-100	4.976	2.775	-4.968	-2.754	8.7	20.5	99.2	98.9	0.31
6Z-MVA-SWG-21-100	-3.132	-1.281	3.132	1.281	0.3	0.4	99.9	99.9	0.01
6Z-MVC-SWG-11-100	-2.154	-1.401	2.155	1.401	0.2	0.4	100.2	100.2	0.01
6Z-SUS-XFR-11	2.159	1.467	-2.155	-1.401	4.8	65.5	99.2	100.2	0.97
6Z-SUS-XFR-11-100	2.159	1.467	-2.159	-1.467	0.1	0.1	99.2	99.2	0.00
6Z-SUS-XFR-12	2.723	1.504	-2.702	-1.274	21.6	230.2	99.2	97.7	1.51
6Z-SUS-XFR-12-100	2.723	1.504	-2.723	-1.504	0.1	0.2	99.2	99.2	0.01
6Z-SUS-XFR-21	3.140	1.396	-3.132	-1.281	8.4	114.3	98.9	99.9	0.98
6Z-SUS-XFR-21-100	3.141	1.396	-3.140	-1.396	0.1	0.3	98.9	98.9	0.01
6Z-SUS-XFR-22	1.827	1.358	-1.816	-1.234	11.6	124.0	98.9	97.8	1.09
6Z-SUS-XFR-22-100	1.827	1.358	-1.827	-1.358	0.1	0.1	98.9	98.9	0.01
DCC1 FEEDER	1.566	0.640	-1.564	-0.638	1.9	2.8	99.9	99.7	0.17

Project:		ETAP		Page:	17
Location:		20.6.0C		Date:	04-18-2023
Contract:				SN:	KIEWITRWN9
Engineer:				Revision:	Base
Filename:	GE-Southern		Study Case: LF NL NV	Config.:	Normal

Branch ID	From-To Bus Flow		To-From Bus Flow		Losses		% Bus Voltage		Vd % Drop
	MW	Mvar	MW	Mvar	kW	kvar	From	To	in Vmag
DCC2 FEEDER	1.566	0.640	-1.564	-0.638	1.9	2.8	99.9	99.7	0.17
Linde 1 Feeder	36.874	22.859	-36.867	-22.848	7.1	10.6	99.2	99.2	0.03
					454.7	11229.4			

* This Transmission Line includes Series Capacitor.

Project:		ETAP		Page:	18
Location:		20.6.0C		Date:	04-18-2023
Contract:				SN:	KIEWITRWN9
Engineer:				Revision:	Base
Filename:	GE-Southern		Study Case: LF NL NV	Config.:	Normal

Alert Summary Report

	% Alert Settings	
	Critical	Marginal
Loading		
Bus	100.0	98.0
Cable / Busway	100.0	98.0
Reactor	100.0	98.0
Line	100.0	98.0
Transformer	100.0	98.0
Panel	100.0	98.0
Protective Device	100.0	98.0
Generator	100.0	98.0
Inverter/Charger	100.0	98.0
Bus Voltage		
OverVoltage	105.0	102.0
UnderVoltage	95.0	98.0
Generator Excitation		
OverExcited (Q Max.)	100.0	95.0
UnderExcited (Q Min.)	100.0	

Marginal Report

Device ID	Type	Condition	Rating/Limit	Unit	Operating	% Operating	Phase Type
6Z-LVB-MCC-121	Bus	Under Voltage	0.480	kV	0.467	97.2	3-Phase
6Z-LVB-MCC-122	Bus	Under Voltage	0.480	kV	0.467	97.2	3-Phase
6Z-LVB-MCC-123	Bus	Under Voltage	0.480	kV	0.467	97.3	3-Phase
6Z-LVB-MCC-221	Bus	Under Voltage	0.480	kV	0.467	97.4	3-Phase
6Z-LVB-MCC-222	Bus	Under Voltage	0.480	kV	0.467	97.4	3-Phase
6Z-LVB-SWG-12	Bus	Under Voltage	0.480	kV	0.468	97.4	3-Phase
6Z-LVB-SWG-22	Bus	Under Voltage	0.480	kV	0.469	97.6	3-Phase
Bus18	Bus	Over Voltage	4.000	kV	4.160	104.0	3-Phase
Bus2	Bus	Over Voltage	4.000	kV	4.157	103.9	3-Phase
Bus20	Bus	Over Voltage	4.000	kV	4.160	104.0	3-Phase
Bus21	Bus	Over Voltage	4.000	kV	4.159	104.0	3-Phase
Bus22	Bus	Over Voltage	4.000	kV	4.159	104.0	3-Phase
Bus23	Bus	Over Voltage	4.000	kV	4.159	104.0	3-Phase
Bus24	Bus	Over Voltage	4.000	kV	4.158	104.0	3-Phase
Bus25	Bus	Over Voltage	4.000	kV	4.158	104.0	3-Phase

Project:		ETAP		Page:	19
Location:		20.6.0C		Date:	04-18-2023
Contract:				SN:	KIEWITRWN9
Engineer:				Revision:	Base
Filename:	GE-Southern		Study Case: LF NL NV	Config.:	Normal

Marginal Report

Device ID	Type	Condition	Rating/Limit	Unit	Operating	% Operating	Phase Type
Bus26	Bus	Over Voltage	4.000	kV	4.159	104.0	3-Phase
Bus28	Bus	Over Voltage	13.200	kV	13.680	103.6	3-Phase
Bus29	Bus	Over Voltage	4.000	kV	4.159	104.0	3-Phase
Bus43	Bus	Over Voltage	4.000	kV	4.157	103.9	3-Phase
Bus6	Bus	Over Voltage	13.200	kV	13.680	103.6	3-Phase
FIRE PUMP TAP BUS	Bus	Under Voltage	0.480	kV	0.468	97.4	3-Phase
HV BUS	Bus	Over Voltage	230.000	kV	235.060	102.2	3-Phase
SUS 12 Secondary	Bus	Under Voltage	0.480	kV	0.469	97.7	3-Phase
SUS 22 SECONDARY	Bus	Under Voltage	0.480	kV	0.469	97.8	3-Phase

SUMMARY OF TOTAL GENERATION, LOADING & DEMAND

	MW	Mvar	MVA	% PF
Source (Swing Buses):	54.920	42.308	69.326	79.22 Lagging
Source (Non-Swing Buses):	0.000	0.000	0.000	
Total Demand:	54.920	42.308	69.326	79.22 Lagging
Total Motor Load:	52.705	30.348	60.817	86.66 Lagging
Total Static Load:	1.760	0.730	1.906	92.36 Lagging
Total Constant I Load:	0.000	0.000	0.000	
Total Generic Load:	0.000	0.000	0.000	
Apparent Losses:	0.455	11.229		
System Mismatch:	0.000	0.000		

Number of Iterations: 3

Project:	**ETAP**	Page:	1
Location:	20.6.0C	Date:	04-18-2023
Contract:		SN:	KIEWITRWN9
Engineer:	Study Case: LF LL NV	Revision:	Base
Filename: GE-Southern		Config.:	Normal

Electrical Transient Analyzer Program

Load Flow Analysis

Loading Category (3): LIGHT

Generation Category (2): NORMAL

Load Diversity Factor: Global

Constant kVA=0%, Constant Z=100%, Generic=100%, Constant I=100%

	Swing	V-Control	Load	Total
Number of Buses:	1	0	37	38

	XFMR2	XFMR3	Reactor	Line/Cable/ Busway	Impedance	Tie PD	Total
Number of Branches:	5	0	0	31	0	1	37

Method of Solution:	Adaptive Newton-Raphson Method
Maximum No. of Iteration:	99
Precision of Solution:	0.0001000
System Frequency:	60.00 Hz
Unit System:	English
Project Filename:	GE-Southern
Output Filename:	\\kiewitplaza\kegi\Data\ES\20041223-FOA2515_GE_Southern_Linde_Advanced_NGCC_Integration\ENG\Engineering\Elec_Controls\Calcs\ETAP\GE-Southern\LF-2.lfr

Project:		ETAP		Page:	2
Location:		20.6.0C		Date:	04-18-2023
Contract:				SN:	KIEWITRWN9
Engineer:				Revision:	Base
Filename:	GE-Southern		Study Case: LF LL NV	Config.:	Normal

Adjustments

Tolerance	Apply Adjustments	Individual /Global	Percent
Transformer Impedance:	Yes	Individual	
Reactor Impedance:	Yes	Individual	
Overload Heater Resistance:	No		
Transmission Line Length:	Yes	Individual	
Cable / Busway Length:	Yes	Individual	

Temperature Correction	Apply Adjustments	Individual /Global	Degree C
Transmission Line Resistance:	Yes	Individual	
Cable / Busway Resistance:	Yes	Individual	

Project:	**ETAP**	Page:	3
Location:	20.6.0C	Date:	04-18-2023
Contract:		SN:	KIEWITRWN9
Engineer:		Revision:	Base
Filename: GE-Southern	Study Case: LF LL NV	Config.:	Normal

Bus Input Data

Bus			Initial Voltage		Load							
					Constant kVA		Constant Z		Constant I		Generic	
ID	kV	Sub-sys	% Mag.	Ang.	MW	Mvar	MW	Mvar	MW	Mvar	MW	Mvar
6Z-LVB-MCC-121	0.480	1	100.0	0.0								
6Z-LVB-MCC-122	0.480	1	100.0	0.0								
6Z-LVB-MCC-123	0.480	1	100.0	0.0								
6Z-LVB-MCC-221	0.480	1	100.0	0.0								
6Z-LVB-MCC-222	0.480	1	100.0	0.0								
6Z-LVB-SWG-12	0.480	1	100.0	0.0								
6Z-LVB-SWG-22	0.480	1	100.0	0.0								
6Z-MVA-SWG-1	13.800	1	100.0	0.0								
6Z-MVA-SWG-2	13.800	1	100.0	0.0								
6Z-MVC-SWG-11	4.160	1	100.0	0.0								
6Z-MVC-SWG-21	4.160	1	100.0	0.0								
Bus2	4.000	1	100.0	0.0								
Bus6	13.200	1	100.0	0.0								
Bus7	13.800	1	100.0	0.0								
Bus8	4.160	1	100.0	0.0								
Bus9	4.160	1	100.0	0.0								
Bus18	4.000	1	100.0	0.0								
Bus20	4.000	1	100.0	0.0								
Bus21	4.000	1	100.0	0.0								
Bus22	4.000	1	100.0	0.0								
Bus23	4.000	1	100.0	0.0								
Bus24	4.000	1	100.0	0.0								
Bus25	4.000	1	100.0	0.0								
Bus26	4.000	1	100.0	0.0								
Bus28	13.200	1	100.0	0.0								
Bus29	4.000	1	100.0	0.0								
Bus43	4.000	1	100.0	0.0								
FIRE PUMP TAP BUS	0.480	1	100.0	0.0								
HV BUS	230.000	1	102.2	0.0								
MPT X WINDING	13.800	1	100.0	0.0								
SUS 11 Primary	13.800	1	100.0	0.0								
SUS 11 Secondary	4.160	1	100.0	0.0								
SUS 12 Primary	13.800	1	100.0	0.0								

Project:	ETAP	Page:	4
Location:	20.6.0C	Date:	04-18-2023
Contract:		SN:	KIEWITRWN9
Engineer:		Revision:	Base
Filename: GE-Southern	Study Case: LF LL NV	Config.:	Normal

Bus			Initial Voltage		Load							
					Constant kVA		Constant Z		Constant I		Generic	
ID	kV	Sub-sys	% Mag.	Ang.	MW	Mvar	MW	Mvar	MW	Mvar	MW	Mvar
SUS 12 Secondary	0.480	1	100.0	0.0								
SUS 21 PRIMARY	13.800	1	100.0	0.0								
SUS 21 SECONDARY	4.160	1	100.0	0.0								
SUS 22 PRIMARY	13.800	1	100.0	0.0								
SUS 22 SECONDARY	0.480	1	100.0	0.0								
Total Number of Buses: 38					0.000	0.000	0.000	0.000	0.000	0.000	0.000	0.000

Generation Bus				Voltage		Generation			Mvar Limits	
ID	kV	Type	Sub-sys	% Mag.	Angle	MW	Mvar	% PF	Max	Min
HV BUS	230.000	Swing	1	102.2	0.0					
						0.000	0.000			

Project:		ETAP		Page:	5
Location:		20.6.0C		Date:	04-18-2023
Contract:				SN:	KIEWITRWN9
Engineer:				Revision:	Base
Filename:	GE-Southern	Study Case: LF LL NV		Config.:	Normal

Line/Cable/Busway Input Data

ohms or siemens/1000 ft per Conductor (Cable) or per Phase (Line/Busway)

Line/Cable/Busway			Length						
ID	Library	Size	Adj. (ft)	% Tol.	#/Phase	T (°C)	R	X	Y
6Z-CWS-MFN-01A-100	5.0NCUS1	1/0	800.0	0.0	1	75	0.127806	0.098000	
6Z-CWS-MFN-01B-100	5.0NCUS1	1/0	800.0	0.0	1	75	0.127806	0.098000	
6Z-CWS-MFN-01C-100	5.0NCUS1	1/0	850.0	0.0	1	75	0.127806	0.098000	
6Z-CWS-MFN-01D-100	5.0NCUS1	1/0	850.0	0.0	1	75	0.127806	0.098000	
6Z-CWS-MFN-01E-100	5.0NCUS1	1/0	900.0	0.0	1	75	0.127806	0.098000	
6Z-CWS-MFN-01F-100	5.0NCUS1	1/0	900.0	0.0	1	75	0.127806	0.098000	
6Z-CWS-MFN-01G-100	5.0NCUS1	1/0	950.0	0.0	1	75	0.127806	0.098000	
6Z-CWS-MFN-01H-100	5.0NCUS1	1/0	950.0	0.0	1	75	0.127806	0.098000	
6Z-CWS-MFN-01I-100	5.0NCUS1	1/0	1100.0	0.0	1	75	0.127806	0.098000	
6Z-CWS-MFN-01J-100	5.0NCUS1	1/0	1100.0	0.0	1	75	0.127806	0.098000	
6Z-CWS-MPM-01A-100	15NCUS1	500	500.0	0.0	1	75	0.033382	0.079000	
6Z-CWS-MPM-01B-100	15NCUS1	500	500.0	0.0	1	75	0.033382	0.079000	
6Z-CWS-MPM-02-100	5.0NCUS1	1/0	500.0	0.0	1	75	0.127806	0.098000	
6Z-LVB-BUS-22	0.6NCUN1	750	50.0	0.0	9	75	0.019400	0.035600	
6Z-LVB-MCC-121-200	0.6NCUN1	500	50.0	0.0	5	75	0.027000	0.039600	
6Z-LVB-MCC-122-200	0.6NCUN1	500	50.0	0.0	5	75	0.027000	0.039600	
6Z-LVB-MCC-123-200	0.6NCUN1	500	50.0	0.0	5	75	0.027000	0.039600	
6Z-LVB-MCC-221-200	0.6NCUN1	500	50.0	0.0	5	75	0.027600	0.037300	
6Z-LVB-MCC-222-200	0.6NCUN1	500	50.0	0.0	5	75	0.027600	0.037300	
6Z-MVA-BUS-1	15NCUN1	750	100.0	0.0	5	75	0.018503	0.034000	
6Z-MVA-BUS-12	0.6NCUN1	750	50.0	0.0	9	75	0.019000	0.038400	
6Z-MVA-SWG-2-100	15NCUS1	500	1500.0	0.0	1	75	0.033382	0.079000	
6Z-MVA-SWG-21-100	5.0NCUS3	500	50.0	0.0	3	75	0.028400	0.035100	
6Z-MVC-SWG-11-100	5.0NCUS1	500	50.0	0.0	3	75	0.026222	0.061417	
6Z-SUS-XFR-11-100	15NCUS1	500	50.0	0.0	1	75	0.028400	0.042100	
6Z-SUS-XFR-12-100	5.0NCUS1	350	50.0	0.0	1	75	0.037095	0.063246	
6Z-SUS-XFR-21-100	15NCUS1	500	50.0	0.0	1	75	0.033382	0.079000	
6Z-SUS-XFR-22-100	5.0NCUS3	500	100.0	0.0	1	75	0.028400	0.035100	
DCC1 FEEDER	5.0NCUS1	500	400.0	0.0	1	75	0.028400	0.042100	
DCC2 FEEDER	5.0NCUS1	500	400.0	0.0	1	75	0.028400	0.042100	
Linde 1 Feeder	15NCUS1	500	250.0	0.0	10	75	0.028400	0.042100	

Line / Cable / Busway resistances are listed at the specified temperatures.

Project:	ETAP	Page:	6
Location:	20.6.0C	Date:	04-18-2023
Contract:		SN:	KIEWITRWN9
Engineer:		Revision:	Base
Filename: GE-Southern	Study Case: LF LL NV	Config.:	Normal

2-Winding Transformer Input Data

Transformer		Rating					Z Variation			% Tap Setting		Adjusted	Phase Shift	
ID	Phase	MVA	Prim. kV	Sec. kV	% Z1	X1/R1	+ 5%	- 5%	% Tol.	Prim.	Sec.	% Z	Type	Angle
6Z-MPT-XFR-1	3-Phase	43.000	230.000	13.800	10.50	29.50	0	0	7.5	0	0	11.2875	Dyn	0.000
6Z-SUS-XFR-11	3-Phase	7.000	13.800	4.160	6.50	13.55	0	0	7.5	-2.500	0	6.9875	Dyn	0.000
6Z-SUS-XFR-12	3-Phase	2.500	13.800	0.480	5.75	10.67	0	0	7.5	-2.500	0	6.1813	Dyn	0.000
6Z-SUS-XFR-21	3-Phase	7.000	13.800	4.160	6.50	13.55	0	0	7.5	-2.500	0	6.9875	Dyn	0.000
6Z-SUS-XFR-22	3-Phase	2.500	13.800	0.480	5.75	10.67	0	0	7.5	-2.500	0	6.1813	Dyn	0.000

2-Winding Transformer Load Tap Changer (LTC) Settings

Transformer	Connected Buses ("*" LTC Side)		Transformer Load Tap Changer Setting					
ID	Primary Bus ID	Secondary Bus ID	% Min. Tap	% Max. Tap	% Step	Regulated Bus ID	% V	kV
6Z-MPT-XFR-1	* IIV BUS	MPT X WINDING	-10.00	10.00	0.625	MPT X WINDING	100.00	13.800

Project:	ETAP	Page:	7
Location:	20.6.0C	Date:	04-18-2023
Contract:		SN:	KIEWITRWN9
Engineer:	Study Case: LF LL NV	Revision:	Base
Filename: GE-Southern		Config.:	Normal

Branch Connections

CKT/Branch		Connected Bus ID		% Impedance, Pos. Seq., 100 MVA Base			
ID	Type	From Bus	To Bus	R	X	Z	Y
6Z-MPT-XFR-1	2W XFMR	HV BUS	MPT X WINDING	0.89	26.23	26.25	
6Z-SUS-XFR-11	2W XFMR	SUS 11 Primary	SUS 11 Secondary	7.16	97.06	97.33	
6Z-SUS-XFR-12	2W XFMR	SUS 12 Primary	SUS 12 Secondary	22.49	240.02	241.07	
6Z-SUS-XFR-21	2W XFMR	SUS 21 PRIMARY	SUS 21 SECONDARY	7.16	97.06	97.33	
6Z-SUS-XFR-22	2W XFMR	SUS 22 PRIMARY	SUS 22 SECONDARY	22.49	240.02	241.07	
6Z-CWS-MFN-01A-100	Cable	6Z-MVC-SWG-11	Bus18	59.08	45.30	74.45	
6Z-CWS-MFN-01B-100	Cable	6Z-MVC-SWG-11	Bus20	59.08	45.30	74.45	
6Z-CWS-MFN-01C-100	Cable	6Z-MVC-SWG-11	Bus21	62.77	48.13	79.10	
6Z-CWS-MFN-01D-100	Cable	6Z-MVC-SWG-11	Bus26	62.77	48.13	79.10	
6Z-CWS-MFN-01E-100	Cable	6Z-MVC-SWG-11	Bus22	66.47	50.97	83.76	
6Z-CWS-MFN-01F-100	Cable	6Z-MVC-SWG-11	Bus23	66.47	50.97	83.76	
6Z-CWS-MFN-01G-100	Cable	6Z-MVC-SWG-11	Bus24	70.16	53.80	88.41	
6Z-CWS-MFN-01H-100	Cable	6Z-MVC-SWG-11	Bus25	70.16	53.80	88.41	
6Z-CWS-MFN-01I-100	Cable	6Z-MVC-SWG-11	Bus43	81.24	62.29	102.37	
6Z-CWS-MFN-01J-100	Cable	6Z-MVC-SWG-11	Bus2	81.24	62.29	102.37	
6Z-CWS-MPM-01A-100	Cable	6Z-MVA-SWG-1	Bus6	0.88	2.07	2.25	
6Z-CWS-MPM-01B-100	Cable	6Z-MVA-SWG-1	Bus28	0.88	2.07	2.25	
6Z-CWS-MPM-02-100	Cable	6Z-MVC-SWG-11	Bus29	36.93	28.31	46.53	
6Z-LVB-BUS-22	Cable	SUS 22 SECONDARY	6Z-LVB-SWG-22	4.68	8.58	9.78	
6Z-LVB-MCC-121-200	Cable	6Z-LVB-SWG-12	6Z-LVB-MCC-121	11.72	17.19	20.80	
6Z-LVB-MCC-122-200	Cable	6Z-LVB-SWG-12	6Z-LVB-MCC-122	11.72	17.19	20.80	
6Z-LVB-MCC-123-200	Cable	6Z-LVB-SWG-12	6Z-LVB-MCC-123	11.72	17.19	20.80	
6Z-LVB-MCC-221-200	Cable	6Z-LVB-SWG-22	6Z-LVB-MCC-221	11.98	16.19	20.14	
6Z-LVB-MCC-222-200	Cable	6Z-LVB-SWG-22	6Z-LVB-MCC-222	11.98	16.19	20.14	
6Z-MVA-BUS-1	Cable	MPT X WINDING	6Z-MVA-SWG-1	0.02	0.04	0.04	
6Z-MVA-BUS-12	Cable	SUS 12 Secondary	FIRE PUMP TAP BUS	4.58	9.26	10.33	
6Z-MVA-SWG-2-100	Cable	6Z-MVA-SWG-1	6Z-MVA-SWG-2	2.63	6.22	6.76	
6Z-MVA-SWG-21-100	Cable	SUS 21 SECONDARY	6Z-MVC-SWG-21	0.27	0.34	0.43	
6Z-MVC-SWG-11-100	Cable	SUS 11 Secondary	6Z-MVC-SWG-11	0.25	0.59	0.64	
6Z-SUS-XFR-11-100	Cable	6Z-MVA-SWG-1	SUS 11 Primary	0.07	0.11	0.13	
6Z-SUS-XFR-12-100	Cable	6Z-MVA-SWG-1	SUS 12 Primary	0.10	0.17	0.19	
6Z-SUS-XFR-21-100	Cable	6Z-MVA-SWG-2	SUS 21 PRIMARY	0.09	0.21	0.23	
6Z-SUS-XFR-22-100	Cable	6Z-MVA-SWG-2	SUS 22 PRIMARY	0.15	0.18	0.24	
DCC1 FEEDER	Cable	6Z-MVC-SWG-21	Bus8	6.56	9.73	11.74	
DCC2 FEEDER	Cable	6Z-MVC-SWG-21	Bus9	6.56	9.73	11.74	
Linde 1 Feeder	Cable	6Z-MVA-SWG-1	Bus7	0.04	0.06	0.07	

Project:		ETAP		Page:	8
Location:		20.6.0C		Date:	04-18-2023
Contract:				SN:	KIEWITRWN9
Engineer:				Revision:	Base
Filename:	GE-Southern		Study Case: LF LL NV	Config.:	Normal

CKT/Branch		Connected Bus ID		% Impedance, Pos. Seq., 100 MVA Base			
ID	Type	From Bus	To Bus	R	X	Z	Y
CB12	Tie Breakr	FIRE PUMP TAP BUS	6Z-LVB-SWG-12				

Project:	ETAP	Page:	9
Location:	20.6.0C	Date:	04-18-2023
Contract:		SN:	KIEWITRWN9
Engineer:		Revision:	Base
Filename: GE-Southern	Study Case: LF LL NV	Config.:	Normal

LOAD FLOW REPORT

Bus		Voltage		Generation		Load		Load Flow					XFMR
ID	kV	% Mag.	Ang.	MW	Mvar	MW	Mvar	ID	MW	Mvar	Amp	%PF	%Tap
6Z-LVB-MCC-121	0.480	103.526	0.0	0.000	0.000	0.000	0.000	6Z-LVB-SWG-12	0.000	0.000	0.0	0.0	
6Z-LVB-MCC-122	0.480	103.526	0.0	0.000	0.000	0.000	0.000	6Z-LVB-SWG-12	0.000	0.000	0.0	0.0	
6Z-LVB-MCC-123	0.480	103.526	0.0	0.000	0.000	0.000	0.000	6Z-LVB-SWG-12	0.000	0.000	0.0	0.0	
6Z-LVB-MCC-221	0.480	103.526	0.0	0.000	0.000	0.000	0.000	6Z-LVB-SWG-22	0.000	0.000	0.0	0.0	
6Z-LVB-MCC-222	0.480	103.526	0.0	0.000	0.000	0.000	0.000	6Z-LVB-SWG-22	0.000	0.000	0.0	0.0	
6Z-LVB-SWG-12	0.480	103.526	0.0	0.000	0.000	0.000	0.000	6Z-LVB-MCC-121	0.000	0.000	0.0	0.0	
								6Z-LVB-MCC-122	0.000	0.000	0.0	0.0	
								6Z-LVB-MCC-123	0.000	0.000	0.0	0.0	
								FIRE PUMP TAP BUS	0.000	0.000	0.0	0.0	
6Z-LVB-SWG-22	0.480	103.526	0.0	0.000	0.000	0.000	0.000	SUS 22 SECONDARY	0.000	0.000	0.0	0.0	
								6Z-LVB-MCC-221	0.000	0.000	0.0	0.0	
								6Z-LVB-MCC-222	0.000	0.000	0.0	0.0	
6Z-MVA-SWG-1	13.800	100.938	0.0	0.000	0.000	0.000	0.000	Bus6	0.000	0.000	0.0	0.0	
								Bus28	0.000	0.000	0.0	0.0	
								MPT X WINDING	0.000	0.000	0.0	0.0	
								6Z-MVA-SWG-2	0.000	0.000	0.0	0.0	
								SUS 11 Primary	0.000	0.000	0.0	0.0	
								SUS 12 Primary	0.000	0.000	0.0	0.0	
								Bus7	0.000	0.000	0.0	0.0	
6Z-MVA-SWG-2	13.800	100.938	0.0	0.000	0.000	0.000	0.000	6Z-MVA-SWG-1	0.000	0.000	0.0	0.0	
								SUS 21 PRIMARY	0.000	0.000	0.0	0.0	
								SUS 22 PRIMARY	0.000	0.000	0.0	0.0	
6Z-MVC-SWG-11	4.160	103.526	0.0	0.000	0.000	0.000	0.000	Bus18	0.000	0.000	0.0	0.0	
								Bus20	0.000	0.000	0.0	0.0	
								Bus21	0.000	0.000	0.0	0.0	
								Bus26	0.000	0.000	0.0	0.0	
								Bus22	0.000	0.000	0.0	0.0	
								Bus23	0.000	0.000	0.0	0.0	
								Bus24	0.000	0.000	0.0	0.0	
								Bus25	0.000	0.000	0.0	0.0	
								Bus43	0.000	0.000	0.0	0.0	

Project:		ETAP		Page:	10
Location:		20.6.0C		Date:	04-18-2023
Contract:				SN:	KIEWITRWN9
Engineer:				Revision:	Base
Filename:	GE-Southern		Study Case: LF LL NV	Config.:	Normal

Bus		Voltage		Generation		Load		Load Flow					XFMR
ID	kV	% Mag.	Ang.	MW	Mvar	MW	Mvar	ID	MW	Mvar	Amp	%PF	%Tap
								Bus2	0.000	0.000	0.0	0.0	
								Bus29	0.000	0.000	0.0	0.0	
								SUS 11 Secondary	0.000	0.000	0.0	0.0	
6Z-MVC-SWG-21	4.160	103.526	0.0	0.000	0.000	0.000	0.000	SUS 21 SECONDARY	0.000	0.000	0.0	0.0	
								Bus8	0.000	0.000	0.0	0.0	
								Bus9	0.000	0.000	0.0	0.0	
Bus2	4.000	107.668	0.0	0.000	0.000	0.000	0.000	6Z-MVC-SWG-11	0.000	0.000	0.0	0.0	
Bus6	13.200	105.526	0.0	0.000	0.000	0.000	0.000	6Z-MVA-SWG-1	0.000	0.000	0.0	0.0	
Bus7	13.800	100.938	0.0	0.000	0.000	0.000	0.000	6Z-MVA-SWG-1	0.000	0.000	0.0	0.0	
Bus8	4.160	103.526	0.0	0.000	0.000	0.000	0.000	6Z-MVC-SWG-21	0.000	0.000	0.0	0.0	
Bus9	4.160	103.526	0.0	0.000	0.000	0.000	0.000	6Z-MVC-SWG-21	0.000	0.000	0.0	0.0	
Bus18	4.000	107.668	0.0	0.000	0.000	0.000	0.000	6Z-MVC-SWG-11	0.000	0.000	0.0	0.0	
Bus20	4.000	107.668	0.0	0.000	0.000	0.000	0.000	6Z-MVC-SWG-11	0.000	0.000	0.0	0.0	
Bus21	4.000	107.668	0.0	0.000	0.000	0.000	0.000	6Z-MVC-SWG-11	0.000	0.000	0.0	0.0	
Bus22	4.000	107.668	0.0	0.000	0.000	0.000	0.000	6Z-MVC-SWG-11	0.000	0.000	0.0	0.0	
Bus23	4.000	107.668	0.0	0.000	0.000	0.000	0.000	6Z-MVC-SWG-11	0.000	0.000	0.0	0.0	
Bus24	4.000	107.668	0.0	0.000	0.000	0.000	0.000	6Z-MVC-SWG-11	0.000	0.000	0.0	0.0	
Bus25	4.000	107.668	0.0	0.000	0.000	0.000	0.000	6Z-MVC-SWG-11	0.000	0.000	0.0	0.0	
Bus26	4.000	107.668	0.0	0.000	0.000	0.000	0.000	6Z-MVC-SWG-11	0.000	0.000	0.0	0.0	
Bus28	13.200	105.526	0.0	0.000	0.000	0.000	0.000	6Z-MVA-SWG-1	0.000	0.000	0.0	0.0	
Bus29	4.000	107.668	0.0	0.000	0.000	0.000	0.000	6Z-MVC-SWG-11	0.000	0.000	0.0	0.0	
Bus43	4.000	107.668	0.0	0.000	0.000	0.000	0.000	6Z-MVC-SWG-11	0.000	0.000	0.0	0.0	
FIRE PUMP TAP BUS	0.480	103.526	0.0	0.000	0.000	0.000	0.000	SUS 12 Secondary	0.000	0.000	0.0	0.0	
								6Z-LVB-SWG-12	0.000	0.000	0.0	0.0	
* IIV BUS	230.000	102.200	0.0	0.000	0.000	0.000	0.000	MPT X WINDING	0.000	0.000	0.0	0.0	1.250
MPT X WINDING	13.800	100.938	0.0	0.000	0.000	0.000	0.000	6Z-MVA-SWG-1	0.000	0.000	0.0	0.0	
								IIV BUS	0.000	0.000	0.0	0.0	
SUS 11 Primary	13.800	100.938	0.0	0.000	0.000	0.000	0.000	6Z-MVA-SWG-1	0.000	0.000	0.0	0.0	
								SUS 11 Secondary	0.000	0.000	0.0	0.0	-2.500
SUS 11 Secondary	4.160	103.526	0.0	0.000	0.000	0.000	0.000	6Z-MVC-SWG-11	0.000	0.000	0.0	0.0	
								SUS 11 Primary	0.000	0.000	0.0	0.0	
SUS 12 Primary	13.800	100.938	0.0	0.000	0.000	0.000	0.000	6Z-MVA-SWG-1	0.000	0.000	0.0	0.0	
								SUS 12 Secondary	0.000	0.000	0.0	0.0	-2.500

Project:		ETAP		Page:	11
Location:		20.6.0C		Date:	04-18-2023
Contract:				SN:	KIEWITRWN9
Engineer:				Revision:	Base
Filename:	GE-Southern		Study Case: LF LL NV	Config.:	Normal

Bus		Voltage		Generation		Load		Load Flow					XFMR
ID	kV	% Mag.	Ang.	MW	Mvar	MW	Mvar	ID	MW	Mvar	Amp	%PF	%Tap
SUS 12 Secondary	0.480	103.526	0.0	0.000	0.000	0.000	0.000	FIRE PUMP TAP BUS	0.000	0.000	0.0	0.0	
								SUS 12 Primary	0.000	0.000	0.0	0.0	
SUS 21 PRIMARY	13.800	100.938	0.0	0.000	0.000	0.000	0.000	6Z-MVA-SWG-2	0.000	0.000	0.0	0.0	
								SUS 21 SECONDARY	0.000	0.000	0.0	0.0	-2.500
SUS 21 SECONDARY	4.160	103.526	0.0	0.000	0.000	0.000	0.000	6Z-MVC-SWG-21	0.000	0.000	0.0	0.0	
								SUS 21 PRIMARY	0.000	0.000	0.0	0.0	
SUS 22 PRIMARY	13.800	100.938	0.0	0.000	0.000	0.000	0.000	6Z-MVA-SWG-2	0.000	0.000	0.0	0.0	
								SUS 22 SECONDARY	0.000	0.000	0.0	0.0	-2.500
SUS 22 SECONDARY	0.480	103.526	0.0	0.000	0.000	0.000	0.000	6Z-LVB-SWG-22	0.000	0.000	0.0	0.0	
								SUS 22 PRIMARY	0.000	0.000	0.0	0.0	

* Indicates a voltage regulated bus (voltage controlled or swing type machine connected to it)

# Indicates a bus with a load mismatch of more than 0.1 MVA

Project:		ETAP		Page:	12
Location:		20.6.0C		Date:	04-18-2023
Contract:				SN:	KIEWITRWN9
Engineer:				Revision:	Base
Filename:	GE-Southern	Study Case: LF LL NV		Config.:	Normal

Bus Loading Summary Report

Bus			Directly Connected Load								Total Bus Load			
			Constant kVA		Constant Z		Constant I		Generic					
ID	kV	Rated Amp	MW	Mvar	MW	Mvar	MW	Mvar	MW	Mvar	MVA	% PF	Amp	Percent Loading
6Z-LVB-MCC-121	0.480	1600.0												
6Z-LVB-MCC-122	0.480	1600.0												
6Z-LVB-MCC-123	0.480	1600.0												
6Z-LVB-MCC-221	0.480	1600.0												
6Z-LVB-MCC-222	0.480	1600.0												
6Z-LVB-SWG-12	0.480	4000.0												
6Z-LVB-SWG-22	0.480	4000.0											-	-
6Z-MVA-SWG-1	13.800	3000.0											-	-
6Z-MVA-SWG-2	13.800	1200.0											-	-
6Z-MVC-SWG-11	4.160	1200.0											-	-
6Z-MVC-SWG-21	4.160	1200.0											-	-
Bus2	4.000													
Bus6	13.200													
Bus7	13.800													
Bus8	4.160												-	
Bus9	4.160												-	
Bus18	4.000													
Bus20	4.000													
Bus21	4.000													
Bus22	4.000													
Bus23	4.000													
Bus24	4.000													
Bus25	4.000													
Bus26	4.000													
Bus28	13.200													
Bus29	4.000												-	
Bus43	4.000													
FIRE PUMP TAP BUS	0.480													
HV BUS	230.000													
MPT X WINDING	13.800												-	
SUS 11 Primary	13.800												-	
SUS 11 Secondary	4.160												-	
SUS 12 Primary	13.800												-	
SUS 12 Secondary	0.480													
SUS 21 PRIMARY	13.800												-	
SUS 21 SECONDARY	4.160												-	
SUS 22 PRIMARY	13.800													
SUS 22 SECONDARY	0.480												-	

Project:	ETAP	Page:	13
Location:	20.6.0C	Date:	04-18-2023
Contract:		SN:	KIEWITRWN9
Engineer:	Study Case: LF LL NV	Revision:	Base
Filename: GE-Southern		Config.:	Normal

Bus			Directly Connected Load								Total Bus Load			
			Constant kVA		Constant Z		Constant I		Generic					
ID	kV	Rated Amp	MW	Mvar	MW	Mvar	MW	Mvar	MW	Mvar	MVA	% PF	Amp	Percent Loading

* Indicates operating load of a bus exceeds the bus critical limit (100.0% of the Continuous Ampere rating).
\# Indicates operating load of a bus exceeds the bus marginal limit (98.0% of the Continuous Ampere rating).

Project:		ETAP		Page:	14
Location:		20.6.0C		Date:	04-18-2023
Contract:				SN:	KIEWITRWN9
Engineer:				Revision:	Base
Filename:	GE-Southern	Study Case: LF LL NV		Config.:	Normal

Branch Loading Summary Report

CKT / Branch		Busway / Cable & Reactor			Transformer				
		Ampacity	Loading		Capability	Loading (input)		Loading (output)	
ID	Type	(Amp)	Amp	%	(MVA)	MVA	%	MVA	%
6Z-CWS-MFN-01A-100	Cable	124.58							
6Z-CWS-MFN-01B-100	Cable	124.58							
6Z-CWS-MFN-01C-100	Cable	124.58	0.00	0.00					
6Z-CWS-MFN-01D-100	Cable	124.58	0.00	0.00					
6Z-CWS-MFN-01E-100	Cable	124.58							
6Z-CWS-MFN-01F-100	Cable	124.58							
6Z-CWS-MFN-01G-100	Cable	124.58							
6Z-CWS-MFN-01H-100	Cable	124.58							
6Z-CWS-MFN-01I-100	Cable	124.58							
6Z-CWS-MFN-01J-100	Cable	124.58							
6Z-CWS-MPM-01A-100	Cable	448.89							
6Z-CWS-MPM-01B-100	Cable	448.89							
6Z-CWS-MPM-02-100	Cable	124.58	0.00	0.00					
6Z-LVB-BUS-22	Cable	5043.36	0.00	0.00					
6Z-LVB-MCC-121-200	Cable	1965.13	0.00	0.00					
6Z-LVB-MCC-122-200	Cable	1965.13	0.00	0.00					
6Z-LVB-MCC-123-200	Cable	1965.13	0.00	0.00					
6Z-LVB-MCC-221-200	Cable	1943.66							
6Z-LVB-MCC-222-200	Cable	1943.66							
6Z-MVA-BUS-1	Cable	3294.23	0.00	0.00					
6Z-MVA-BUS-12	Cable	5096.18	0.00	0.00					
6Z-MVA-SWG-2-100	Cable	448.89	0.00	0.00					
6Z-MVA-SWG-21-100	Cable	1161.03	0.00	0.00					
6Z-MVC-SWG-11-100	Cable	1730.77	0.00	0.00					
6Z-SUS-XFR-11-100	Cable	514.72	0.00	0.00					
6Z-SUS-XFR-12-100	Cable	437.12	0.00	0.00					
6Z-SUS-XFR-21-100	Cable	448.89							
6Z-SUS-XFR-22-100	Cable	387.01							
DCC1 FEEDER	Cable	444.45	0.00	0.00					
DCC2 FEEDER	Cable	444.45	0.00	0.00					
Linde 1 Feeder	Cable	5147.16							
6Z-MPT-XFR-1	Transformer				71.668				
6Z-SUS-XFR-11	Transformer				8.750				

Project:		ETAP		Page:	15
Location:		20.6.0C		Date:	04-18-2023
Contract:				SN:	KIEWITRWN9
Engineer:				Revision:	Base
Filename:	GE-Southern	Study Case: LF LL NV		Config.:	Normal

CKT / Branch		Busway / Cable & Reactor			Transformer				
						Loading (input)		Loading (output)	
ID	Type	Ampacity (Amp)	Loading Amp	%	Capability (MVA)	MVA	%	MVA	%
6Z-SUS-XFR-12	Transformer				3.333				
6Z-SUS-XFR-21	Transformer				8.750				
6Z-SUS-XFR-22	Transformer				3.333				

* Indicates a branch with operating load exceeding the branch capability.

Project:		ETAP		Page:	16
Location:		20.6.0C		Date:	04-18-2023
Contract:				SN:	KIEWITRWN9
Engineer:				Revision:	Base
Filename:	GE-Southern		Study Case: LF LL NV	Config.:	Normal

Branch Losses Summary Report

	From-To Bus Flow		To-From Bus Flow		Losses		% Bus Voltage		Vd % Drop
Branch ID	MW	Mvar	MW	Mvar	kW	kvar	From	To	in Vmag
6Z-CWS-MFN-01A-100	0.000	0.000	0.000	0.000			103.5	107.7	
6Z-CWS-MFN-01B-100	0.000	0.000	0.000	0.000			103.5	107.7	
6Z-CWS-MFN-01C-100	0.000	0.000	0.000	0.000			103.5	107.7	
6Z-CWS-MFN-01D-100	0.000	0.000	0.000	0.000			103.5	107.7	
6Z-CWS-MFN-01E-100	0.000	0.000	0.000	0.000			103.5	107.7	
6Z-CWS-MFN-01F-100	0.000	0.000	0.000	0.000			103.5	107.7	
6Z-CWS-MFN-01G-100	0.000	0.000	0.000	0.000			103.5	107.7	
6Z-CWS-MFN-01H-100	0.000	0.000	0.000	0.000			103.5	107.7	
6Z-CWS-MFN-01I-100	0.000	0.000	0.000	0.000			103.5	107.7	
6Z-CWS-MFN-01J-100	0.000	0.000	0.000	0.000			103.5	107.7	
6Z-CWS-MPM-01A-100	0.000	0.000	0.000	0.000			100.9	105.5	
6Z-CWS-MPM-01B-100	0.000	0.000	0.000	0.000			100.9	105.5	
6Z-CWS-MPM-02-100	0.000	0.000	0.000	0.000			103.5	107.7	
6Z-LVB-BUS-22	0.000	0.000	0.000	0.000			103.5	103.5	0.00
6Z-LVB-MCC-121-200	0.000	0.000	0.000	0.000			103.5	103.5	
6Z-LVB-MCC-122-200	0.000	0.000	0.000	0.000			103.5	103.5	
6Z-LVB-MCC-123-200	0.000	0.000	0.000	0.000			103.5	103.5	
6Z-LVB-MCC-221-200	0.000	0.000	0.000	0.000			103.5	103.5	
6Z-LVB-MCC-222-200	0.000	0.000	0.000	0.000			103.5	103.5	
6Z-MPT-XFR-1	0.000	0.000	0.000	0.000			102.2	100.9	1.26
6Z-MVA-BUS-1	0.000	0.000	0.000	0.000			100.9	100.9	0.00
6Z-MVA-BUS-12	0.000	0.000	0.000	0.000			103.5	103.5	0.00
6Z-MVA-SWG-2-100	0.000	0.000	0.000	0.000			100.9	100.9	0.00
6Z-MVA-SWG-21-100	0.000	0.000	0.000	0.000			103.5	103.5	
6Z-MVC-SWG-11-100	0.000	0.000	0.000	0.000			103.5	103.5	
6Z-SUS-XFR-11	0.000	0.000	0.000	0.000			100.9	103.5	2.59
6Z-SUS-XFR-11-100	0.000	0.000	0.000	0.000			100.9	100.9	0.00
6Z-SUS-XFR-12	0.000	0.000	0.000	0.000			100.9	103.5	2.59
6Z-SUS-XFR-12-100	0.000	0.000	0.000	0.000			100.9	100.9	0.00
6Z-SUS-XFR-21	0.000	0.000	0.000	0.000			100.9	103.5	2.59
6Z-SUS-XFR-21-100	0.000	0.000	0.000	0.000			100.9	100.9	
6Z-SUS-XFR-22	0.000	0.000	0.000	0.000			100.9	103.5	2.59
6Z-SUS-XFR-22-100	0.000	0.000	0.000	0.000			100.9	100.9	
DCC1 FEEDER	0.000	0.000	0.000	0.000			103.5	103.5	

Project:		ETAP		Page:	17
Location:		20.6.0C		Date:	04-18-2023
Contract:				SN:	KIEWITRWN9
Engineer:				Revision:	Base
Filename:	GE-Southern	Study Case: LF LL NV		Config.:	Normal

Branch ID	From-To Bus Flow		To-From Bus Flow		Losses		% Bus Voltage		Vd % Drop in Vmag
	MW	Mvar	MW	Mvar	kW	kvar	From	To	
DCC2 FEEDER	0.000	0.000	0.000	0.000			103.5	103.5	
Linde 1 Feeder	0.000	0.000	0.000	0.000			100.9	100.9	

* This Transmission Line includes Series Capacitor.

Project:		ETAP		Page:	18
Location:		20.6.0C		Date:	04-18-2023
Contract:				SN:	KIEWITRWN9
Engineer:				Revision:	Base
Filename:	GE-Southern	Study Case: LF LL NV		Config.:	Normal

Alert Summary Report

	% Alert Settings	
	Critical	Marginal
Loading		
Bus	100.0	98.0
Cable / Busway	100.0	98.0
Reactor	100.0	98.0
Line	100.0	98.0
Transformer	100.0	98.0
Panel	100.0	98.0
Protective Device	100.0	98.0
Generator	100.0	98.0
Inverter/Charger	100.0	98.0
Bus Voltage		
OverVoltage	105.0	102.0
UnderVoltage	95.0	98.0
Generator Excitation		
OverExcited (Q Max.)	100.0	95.0
UnderExcited (Q Min.)	100.0	

Critical Report

Device ID	Type	Condition	Rating/Limit	Unit	Operating	% Operating	Phase Type
Bus18	Bus	Over Voltage	4.000	kV	4.307	107.7	3-Phase
Bus2	Bus	Over Voltage	4.000	kV	4.307	107.7	3-Phase
Bus20	Bus	Over Voltage	4.000	kV	4.307	107.7	3-Phase
Bus21	Bus	Over Voltage	4.000	kV	4.307	107.7	3-Phase
Bus22	Bus	Over Voltage	4.000	kV	4.307	107.7	3-Phase
Bus23	Bus	Over Voltage	4.000	kV	4.307	107.7	3-Phase
Bus24	Bus	Over Voltage	4.000	kV	4.307	107.7	3-Phase
Bus25	Bus	Over Voltage	4.000	kV	4.307	107.7	3-Phase
Bus26	Bus	Over Voltage	4.000	kV	4.307	107.7	3-Phase
Bus28	Bus	Over Voltage	13.200	kV	13.929	105.5	3-Phase
Bus29	Bus	Over Voltage	4.000	kV	4.307	107.7	3-Phase
Bus43	Bus	Over Voltage	4.000	kV	4.307	107.7	3-Phase
Bus6	Bus	Over Voltage	13.200	kV	13.929	105.5	3-Phase

Marginal Report

Project:		ETAP		Page:	19
Location:		20.6.0C		Date:	04-18-2023
Contract:				SN:	KIEWITRWN9
Engineer:				Revision:	Base
Filename:	GE-Southern	Study Case: LF LL NV		Config.:	Normal

Marginal Report

Device ID	Type	Condition	Rating/Limit	Unit	Operating	% Operating	Phase Type
6Z-LVB-MCC-121	Bus	Over Voltage	0.480	kV	0.497	103.5	3-Phase
6Z-LVB-MCC-122	Bus	Over Voltage	0.480	kV	0.497	103.5	3-Phase
6Z-LVB-MCC-123	Bus	Over Voltage	0.480	kV	0.497	103.5	3-Phase
6Z-LVB-MCC-221	Bus	Over Voltage	0.480	kV	0.497	103.5	3-Phase
6Z-LVB-MCC-222	Bus	Over Voltage	0.480	kV	0.497	103.5	3-Phase
6Z-LVB-SWG-12	Bus	Over Voltage	0.480	kV	0.497	103.5	3-Phase
6Z-LVB-SWG-22	Bus	Over Voltage	0.480	kV	0.497	103.5	3-Phase
6Z-MVC-SWG-11	Bus	Over Voltage	4.160	kV	4.307	103.5	3-Phase
6Z-MVC-SWG-21	Bus	Over Voltage	4.160	kV	4.307	103.5	3-Phase
Bus8	Bus	Over Voltage	4.160	kV	4.307	103.5	3-Phase
Bus9	Bus	Over Voltage	4.160	kV	4.307	103.5	3-Phase
FIRE PUMP TAP BUS	Bus	Over Voltage	0.480	kV	0.497	103.5	3-Phase
HV BUS	Bus	Over Voltage	230.000	kV	235.060	102.2	3-Phase
SUS 11 Secondary	Bus	Over Voltage	4.160	kV	4.307	103.5	3-Phase
SUS 12 Secondary	Bus	Over Voltage	0.480	kV	0.497	103.5	3-Phase
SUS 21 SECONDARY	Bus	Over Voltage	4.160	kV	4.307	103.5	3-Phase
SUS 22 SECONDARY	Bus	Over Voltage	0.480	kV	0.497	103.5	3-Phase

Project:		ETAP		Page:	20
Location:		20.6.0C		Date:	04-18-2023
Contract:				SN:	KIEWITRWN9
Engineer:				Revision:	Base
Filename:	GE-Southern		Study Case: LF LL NV	Config.:	Normal

SUMMARY OF TOTAL GENERATION, LOADING & DEMAND

	MW	Mvar	MVA	% PF
Source (Swing Buses):	0.000	0.000	0.000	
Source (Non-Swing Buses):	0.000	0.000	0.000	
Total Demand:	0.000	0.000	0.000	
Total Motor Load:	0.000	0.000	0.000	
Total Static Load:	0.000	0.000	0.000	
Total Constant I Load:	0.000	0.000	0.000	
Total Generic Load:	0.000	0.000	0.000	
Apparent Losses:	0.000	0.000		
System Mismatch:	0.000	0.000		

Number of Iterations: 3

Project:	**ETAP**	Page:	1
Location:	20.6.0C	Date:	04-18-2023
Contract:		SN:	KIEWITRWN9
Engineer:	Study Case: LF HL NV	Revision:	Base
Filename: GE-Southern		Config.:	Normal

Electrical Transient Analyzer Program

Load Flow Analysis

Loading Category (1): HEAVY

Generation Category (2): NORMAL

Load Diversity Factor: Bus Maximum

	Swing	V-Control	Load	Total
Number of Buses:	1	0	37	38

	XFMR2	XFMR3	Reactor	Line/Cable/ Busway	Impedance	Tie PD	Total
Number of Branches:	5	0	0	31	0	1	37

Method of Solution:	Adaptive Newton-Raphson Method
Maximum No. of Iteration:	99
Precision of Solution:	0.0001000
System Frequency:	60.00 Hz
Unit System:	English
Project Filename:	GE-Southern
Output Filename:	\\kiewitplaza\kegi\Data\ES\20041223-FOA2515_GE_Southern_Linde_Advanced_NGCC_Integration\ENG\Engineering\Elec_Controls\Calcs\ETAP\GE-Southern\LF-3.lfr

Project:		ETAP		Page:	2
Location:		20.6.0C		Date:	04-18-2023
Contract:				SN:	KIEWITRWN9
Engineer:				Revision:	Base
Filename:	GE-Southern		Study Case: LF HL NV	Config.:	Normal

Adjustments

Tolerance	Apply Adjustments	Individual /Global	Percent
Transformer Impedance:	Yes	Individual	
Reactor Impedance:	Yes	Individual	
Overload Heater Resistance:	No		
Transmission Line Length:	Yes	Individual	
Cable / Busway Length:	Yes	Individual	

Temperature Correction	Apply Adjustments	Individual /Global	Degree C
Transmission Line Resistance:	Yes	Individual	
Cable / Busway Resistance:	Yes	Individual	

Project:		ETAP		Page:	3
Location:		20.6.0C		Date:	04-18-2023
Contract:				SN:	KIEWITRWN9
Engineer:				Revision:	Base
Filename:	GE-Southern		Study Case: LF HL NV	Config.:	Normal

Bus Input Data

Bus			Initial Voltage		Load							
					Constant kVA		Constant Z		Constant I		Generic	
ID	kV	Sub-sys	% Mag.	Ang.	MW	Mvar	MW	Mvar	MW	Mvar	MW	Mvar
6Z-LVB-MCC-121	0.480	1	100.0	0.0	0.684	0.406	0.352	0.209				
6Z-LVB-MCC-122	0.480	1	100.0	0.0	0.680	0.404	0.350	0.208				
6Z-LVB-MCC-123	0.480	1	100.0	0.0			0.917	0.186				
6Z-LVB-MCC-221	0.480	1	100.0	0.0	0.842	0.570	0.172	0.117				
6Z-LVB-MCC-222	0.480	1	100.0	0.0	0.842	0.570	0.172	0.117				
6Z-LVB-SWG-12	0.480	1	100.0	0.0								
6Z-LVB-SWG-22	0.480	1	100.0	0.0								
6Z-MVA-SWG-1	13.800	1	100.0	0.0								
6Z-MVA-SWG-2	13.800	1	100.0	0.0								
6Z-MVC-SWG-11	4.160	1	100.0	0.0								
6Z-MVC-SWG-21	4.160	1	100.0	0.0								
Bus2	4.000	1	100.0	0.0	0.199	0.138						
Bus6	13.200	1	100.0	0.0	4.342	1.706						
Bus7	13.800	1	100.0	0.0	36.867	22.848						
Bus8	4.160	1	100.0	0.0	1.738	0.708						
Bus9	4.160	1	100.0	0.0	1.738	0.708						
Bus18	4.000	1	100.0	0.0	0.199	0.138						
Bus20	4.000	1	100.0	0.0	0.199	0.138						
Bus21	4.000	1	100.0	0.0	0.199	0.138						
Bus22	4.000	1	100.0	0.0	0.199	0.138						
Bus23	4.000	1	100.0	0.0	0.199	0.138						
Bus24	4.000	1	100.0	0.0	0.199	0.138						
Bus25	4.000	1	100.0	0.0	0.199	0.138						
Bus26	4.000	1	100.0	0.0	0.199	0.138						
Bus28	13.200	1	100.0	0.0	4.342	1.706						
Bus29	4.000	1	100.0	0.0	0.400	0.169						
Bus43	4.000	1	100.0	0.0	0.199	0.138						
FIRE PUMP TAP BUS	0.480	1	100.0	0.0								
HV BUS	230.000	1	102.2	0.0								
MPT X WINDING	13.800	1	100.0	0.0								
SUS 11 Primary	13.800	1	100.0	0.0								
SUS 11 Secondary	4.160	1	100.0	0.0								
SUS 12 Primary	13.800	1	100.0	0.0								

Project:	ETAP	Page:	4
Location:	20.6.0C	Date:	04-18-2023
Contract:		SN:	KIEWITRWN9
Engineer:		Revision:	Base
Filename: GE-Southern	Study Case: LF HL NV	Config.:	Normal

Bus			Initial Voltage		Load							
					Constant kVA		Constant Z		Constant I		Generic	
ID	kV	Sub-sys	% Mag.	Ang.	MW	Mvar	MW	Mvar	MW	Mvar	MW	Mvar
SUS 12 Secondary	0.480	1	100.0	0.0								
SUS 21 PRIMARY	13.800	1	100.0	0.0								
SUS 21 SECONDARY	4.160	1	100.0	0.0								
SUS 22 PRIMARY	13.800	1	100.0	0.0								
SUS 22 SECONDARY	0.480	1	100.0	0.0								
Total Number of Buses: 38					54.464	31.181	1.964	0.837	0.000	0.000	0.000	0.000

Generation Bus				Voltage		Generation			Mvar Limits	
ID	kV	Type	Sub-sys	% Mag.	Angle	MW	Mvar	% PF	Max	Min
HV BUS	230.000	Swing	1	102.2	0.0					
						0.000	0.000			

Project:		ETAP		Page:	5
Location:		20.6.0C		Date:	04-18-2023
Contract:				SN:	KIEWITRWN9
Engineer:				Revision:	Base
Filename:	GE-Southern	Study Case: LF HL NV		Config.:	Normal

Line/Cable/Busway Input Data

ohms or siemens/1000 ft per Conductor (Cable) or per Phase (Line/Busway)

Line/Cable/Busway ID	Library	Size	Length Adj. (ft)	% Tol.	#/Phase	T (°C)	R	X	Y
6Z-CWS-MFN-01A-100	5.0NCUS1	1/0	800.0	0.0	1	75	0.127806	0.098000	
6Z-CWS-MFN-01B-100	5.0NCUS1	1/0	800.0	0.0	1	75	0.127806	0.098000	
6Z-CWS-MFN-01C-100	5.0NCUS1	1/0	850.0	0.0	1	75	0.127806	0.098000	
6Z-CWS-MFN-01D-100	5.0NCUS1	1/0	850.0	0.0	1	75	0.127806	0.098000	
6Z-CWS-MFN-01E-100	5.0NCUS1	1/0	900.0	0.0	1	75	0.127806	0.098000	
6Z-CWS-MFN-01F-100	5.0NCUS1	1/0	900.0	0.0	1	75	0.127806	0.098000	
6Z-CWS-MFN-01G-100	5.0NCUS1	1/0	950.0	0.0	1	75	0.127806	0.098000	
6Z-CWS-MFN-01H-100	5.0NCUS1	1/0	950.0	0.0	1	75	0.127806	0.098000	
6Z-CWS-MFN-01I-100	5.0NCUS1	1/0	1100.0	0.0	1	75	0.127806	0.098000	
6Z-CWS-MFN-01J-100	5.0NCUS1	1/0	1100.0	0.0	1	75	0.127806	0.098000	
6Z-CWS-MPM-01A-100	15NCUS1	500	500.0	0.0	1	75	0.033382	0.079000	
6Z-CWS-MPM-01B-100	15NCUS1	500	500.0	0.0	1	75	0.033382	0.079000	
6Z-CWS-MPM-02-100	5.0NCUS1	1/0	500.0	0.0	1	75	0.127806	0.098000	
6Z-LVB-BUS-22	0.6NCUN1	750	50.0	0.0	9	75	0.019400	0.035600	
6Z-LVB-MCC-121-200	0.6NCUN1	500	50.0	0.0	5	75	0.027000	0.039600	
6Z-LVB-MCC-122-200	0.6NCUN1	500	50.0	0.0	5	75	0.027000	0.039600	
6Z-LVB-MCC-123-200	0.6NCUN1	500	50.0	0.0	5	75	0.027000	0.039600	
6Z-LVB-MCC-221-200	0.6NCUN1	500	50.0	0.0	5	75	0.027600	0.037300	
6Z-LVB-MCC-222-200	0.6NCUN1	500	50.0	0.0	5	75	0.027600	0.037300	
6Z-MVA-BUS-1	15NCUN1	750	100.0	0.0	5	75	0.018503	0.034000	
6Z-MVA-BUS-12	0.6NCUN1	750	50.0	0.0	9	75	0.019000	0.038400	
6Z-MVA-SWG-2-100	15NCUS1	500	1500.0	0.0	1	75	0.033382	0.079000	
6Z-MVA-SWG-21-100	5.0NCUS3	500	50.0	0.0	3	75	0.028400	0.035100	
6Z-MVC-SWG-11-100	5.0NCUS1	500	50.0	0.0	3	75	0.026222	0.061417	
6Z-SUS-XFR-11-100	15NCUS1	500	50.0	0.0	1	75	0.028400	0.042100	
6Z-SUS-XFR-12-100	5.0NCUS1	350	50.0	0.0	1	75	0.037095	0.063246	
6Z-SUS-XFR-21-100	15NCUS1	500	50.0	0.0	1	75	0.033382	0.079000	
6Z-SUS-XFR-22-100	5.0NCUS3	500	100.0	0.0	1	75	0.028400	0.035100	
DCC1 FEEDER	5.0NCUS1	500	400.0	0.0	1	75	0.028400	0.042100	
DCC2 FEEDER	5.0NCUS1	500	400.0	0.0	1	75	0.028400	0.042100	
Linde 1 Feeder	15NCUS1	500	250.0	0.0	10	75	0.028400	0.042100	

Line / Cable / Busway resistances are listed at the specified temperatures.

Project:	ETAP	Page:	6
Location:	20.6.0C	Date:	04-18-2023
Contract:		SN:	KIEWITRWN9
Engineer:		Revision:	Base
Filename: GE-Southern	Study Case: LF HL NV	Config.:	Normal

2-Winding Transformer Input Data

Transformer		Rating					Z Variation			% Tap Setting		Adjusted	Phase Shift	
ID	Phase	MVA	Prim. kV	Sec. kV	% Z1	X1/R1	+ 5%	- 5%	% Tol.	Prim.	Sec.	% Z	Type	Angle
6Z-MPT-XFR-1	3-Phase	43.000	230.000	13.800	10.50	29.50	0	0	7.5	0	0	11.2875	Dyn	0.000
6Z-SUS-XFR-11	3-Phase	7.000	13.800	4.160	6.50	13.55	0	0	7.5	-2.500	0	6.9875	Dyn	0.000
6Z-SUS-XFR-12	3-Phase	2.500	13.800	0.480	5.75	10.67	0	0	7.5	-2.500	0	6.1813	Dyn	0.000
6Z-SUS-XFR-21	3-Phase	7.000	13.800	4.160	6.50	13.55	0	0	7.5	-2.500	0	6.9875	Dyn	0.000
6Z-SUS-XFR-22	3-Phase	2.500	13.800	0.480	5.75	10.67	0	0	7.5	-2.500	0	6.1813	Dyn	0.000

2-Winding Transformer Load Tap Changer (LTC) Settings

Transformer	Connected Buses ("*" LTC Side)		Transformer Load Tap Changer Setting					
ID	Primary Bus ID	Secondary Bus ID	% Min. Tap	% Max. Tap	% Step	Regulated Bus ID	% V	kV
6Z-MPT-XFR-1	* HV BUS	MPT X WINDING	-10.00	10.00	0.625	MPT X WINDING	100.00	13.800

Project:	ETAP	Page:	7
Location:	20.6.0C	Date:	04-18-2023
Contract:		SN:	KIEWITRWN9
Engineer:		Revision:	Base
Filename: GE-Southern	Study Case: LF HL NV	Config.:	Normal

Branch Connections

CKT/Branch		Connected Bus ID		% Impedance, Pos. Seq., 100 MVA Base			
ID	Type	From Bus	To Bus	R	X	Z	Y
6Z-MPT-XFR-1	2W XFMR	HV BUS	MPT X WINDING	0.89	26.23	26.25	
6Z-SUS-XFR-11	2W XFMR	SUS 11 Primary	SUS 11 Secondary	7.16	97.06	97.33	
6Z-SUS-XFR-12	2W XFMR	SUS 12 Primary	SUS 12 Secondary	22.49	240.02	241.07	
6Z-SUS-XFR-21	2W XFMR	SUS 21 PRIMARY	SUS 21 SECONDARY	7.16	97.06	97.33	
6Z-SUS-XFR-22	2W XFMR	SUS 22 PRIMARY	SUS 22 SECONDARY	22.49	240.02	241.07	
6Z-CWS-MFN-01A-100	Cable	6Z-MVC-SWG-11	Bus18	59.08	45.30	74.45	
6Z-CWS-MFN-01B-100	Cable	6Z-MVC-SWG-11	Bus20	59.08	45.30	74.45	
6Z-CWS-MFN-01C-100	Cable	6Z-MVC-SWG-11	Bus21	62.77	48.13	79.10	
6Z-CWS-MFN-01D-100	Cable	6Z-MVC-SWG-11	Bus26	62.77	48.13	79.10	
6Z-CWS-MFN-01E-100	Cable	6Z-MVC-SWG-11	Bus22	66.47	50.97	83.76	
6Z-CWS-MFN-01F-100	Cable	6Z-MVC-SWG-11	Bus23	66.47	50.97	83.76	
6Z-CWS-MFN-01G-100	Cable	6Z-MVC-SWG-11	Bus24	70.16	53.80	88.41	
6Z-CWS-MFN-01H-100	Cable	6Z-MVC-SWG-11	Bus25	70.16	53.80	88.41	
6Z-CWS-MFN-01I-100	Cable	6Z-MVC-SWG-11	Bus43	81.24	62.29	102.37	
6Z-CWS-MFN-01J-100	Cable	6Z-MVC-SWG-11	Bus2	81.24	62.29	102.37	
6Z-CWS-MPM-01A-100	Cable	6Z-MVA-SWG-1	Bus6	0.88	2.07	2.25	
6Z-CWS-MPM-01B-100	Cable	6Z-MVA-SWG-1	Bus28	0.88	2.07	2.25	
6Z-CWS-MPM-02-100	Cable	6Z-MVC-SWG-11	Bus29	36.93	28.31	46.53	
6Z-LVB-BUS-22	Cable	SUS 22 SECONDARY	6Z-LVB-SWG-22	4.68	8.58	9.78	
6Z-LVB-MCC-121-200	Cable	6Z-LVB-SWG-12	6Z-LVB-MCC-121	11.72	17.19	20.80	
6Z-LVB-MCC-122-200	Cable	6Z-LVB-SWG-12	6Z-LVB-MCC-122	11.72	17.19	20.80	
6Z-LVB-MCC-123-200	Cable	6Z-LVB-SWG-12	6Z-LVB-MCC-123	11.72	17.19	20.80	
6Z-LVB-MCC-221-200	Cable	6Z-LVB-SWG-22	6Z-LVB-MCC-221	11.98	16.19	20.14	
6Z-LVB-MCC-222-200	Cable	6Z-LVB-SWG-22	6Z-LVB-MCC-222	11.98	16.19	20.14	
6Z-MVA-BUS-1	Cable	MPT X WINDING	6Z-MVA-SWG-1	0.02	0.04	0.04	
6Z-MVA-BUS-12	Cable	SUS 12 Secondary	FIRE PUMP TAP BUS	4.58	9.26	10.33	
6Z-MVA-SWG-2-100	Cable	6Z-MVA-SWG-1	6Z-MVA-SWG-2	2.63	6.22	6.76	
6Z-MVA-SWG-21-100	Cable	SUS 21 SECONDARY	6Z-MVC-SWG-21	0.27	0.34	0.43	
6Z-MVC-SWG-11-100	Cable	SUS 11 Secondary	6Z-MVC-SWG-11	0.25	0.59	0.64	
6Z-SUS-XFR-11-100	Cable	6Z-MVA-SWG-1	SUS 11 Primary	0.07	0.11	0.13	
6Z-SUS-XFR-12-100	Cable	6Z-MVA-SWG-1	SUS 12 Primary	0.10	0.17	0.19	
6Z-SUS-XFR-21-100	Cable	6Z-MVA-SWG-2	SUS 21 PRIMARY	0.09	0.21	0.23	
6Z-SUS-XFR-22-100	Cable	6Z-MVA-SWG-2	SUS 22 PRIMARY	0.15	0.18	0.24	
DCC1 FEEDER	Cable	6Z-MVC-SWG-21	Bus8	6.56	9.73	11.74	
DCC2 FEEDER	Cable	6Z-MVC-SWG-21	Bus9	6.56	9.73	11.74	
Linde 1 Feeder	Cable	6Z-MVA-SWG-1	Bus7	0.04	0.06	0.07	

Project:		ETAP		Page:	8
Location:		20.6.0C		Date:	04-18-2023
Contract:				SN:	KIEWITRWN9
Engineer:				Revision:	Base
Filename:	GE-Southern		Study Case: LF HL NV	Config.:	Normal

CKT/Branch		Connected Bus ID		% Impedance, Pos. Seq., 100 MVA Base			
ID	Type	From Bus	To Bus	R	X	Z	Y
CB12	Tie Breakr	FIRE PUMP TAP BUS	6Z-LVB-SWG-12				

Project:		ETAP		Page:	9
Location:		20.6.0C		Date:	04-18-2023
Contract:				SN:	KIEWITRWN9
Engineer:				Revision:	Base
Filename:	GE-Southern		Study Case: LF HL NV	Config.:	Normal

LOAD FLOW REPORT

Bus		Voltage		Generation		Load		Load Flow					XFMR
ID	kV	% Mag.	Ang.	MW	Mvar	MW	Mvar	ID	MW	Mvar	Amp	%PF	%Tap
6Z-LVB-MCC-121	0.480	97.243	-11.7	0.000	0.000	1.018	0.604	6Z-LVB-SWG-12	-1.018	-0.604	1463.5	86.0	
6Z-LVB-MCC-122	0.480	97.245	-11.7	0.000	0.000	1.011	0.600	6Z-LVB-SWG-12	-1.011	-0.600	1454.7	86.0	
6Z-LVB-MCC-123	0.480	97.337	-11.8	0.000	0.000	0.868	0.176	6Z-LVB-SWG-12	-0.868	-0.176	1095.0	98.0	
6Z-LVB-MCC-221	0.480	97.340	-10.6	0.000	0.000	1.005	0.681	6Z-LVB-SWG-22	-1.005	-0.681	1500.5	82.8	
6Z-LVB-MCC-222	0.480	97.340	-10.6	0.000	0.000	1.005	0.681	6Z-LVB-SWG-22	-1.005	-0.681	1500.5	82.8	
6Z-LVB-SWG-12	0.480	97.473	-11.7	0.000	0.000	0.000	0.000	6Z-LVB-MCC-121	1.019	0.606	1463.5	85.9	
								6Z-LVB-MCC-122	1.013	0.603	1454.7	85.9	
								6Z-LVB-MCC-123	0.869	0.178	1095.0	98.0	
								FIRE PUMP TAP BUS	-2.902	-1.387	3968.8	90.2	
6Z-LVB-SWG-22	0.480	97.577	-10.5	0.000	0.000	0.000	0.000	SUS 22 SECONDARY	-2.015	-1.367	3001.0	82.8	
								6Z-LVB-MCC-221	1.007	0.683	1500.5	82.8	
								6Z-LVB-MCC-222	1.007	0.683	1500.5	82.8	
6Z-MVA-SWG-1	13.800	99.636	-7.6	0.000	0.000	0.000	0.000	Bus6	4.344	1.711	196.0	93.0	
								Bus28	4.344	1.711	196.0	93.0	
								MPT X WINDING	-56.428	-32.699	2738.5	86.5	
								6Z-MVA-SWG-2	5.534	3.116	266.7	87.1	
								SUS 11 Primary	2.400	1.638	122.0	82.6	
								SUS 12 Primary	2.932	1.665	141.6	87.0	
								Bus7	36.874	22.859	1821.7	85.0	
6Z-MVA-SWG-2	13.800	99.296	-7.8	0.000	0.000	0.000	0.000	6Z-MVA-SWG-1	-5.523	-3.091	266.7	87.3	
								SUS 21 PRIMARY	3.491	1.565	161.2	91.2	
								SUS 22 PRIMARY	2.032	1.526	107.1	80.0	
6Z-MVC-SWG-11	4.160	100.428	-8.9	0.000	0.000	0.000	0.000	Bus18	0.199	0.139	33.5	82.1	
								Bus20	0.199	0.139	33.5	82.1	
								Bus21	0.199	0.139	33.6	82.1	
								Bus26	0.199	0.139	33.6	82.1	
								Bus22	0.199	0.139	33.6	82.1	
								Bus23	0.199	0.139	33.6	82.1	
								Bus24	0.199	0.139	33.6	82.1	
								Bus25	0.199	0.139	33.6	82.1	
								Bus43	0.199	0.139	33.6	82.1	

Project:		ETAP		Page:	10
Location:		20.6.0C		Date:	04-18-2023
Contract:				SN:	KIEWITRWN9
Engineer:				Revision:	Base
Filename:	GE-Southern		Study Case: LF HL NV	Config.:	Normal

Bus		Voltage		Generation		Load		Load Flow					XFMR
ID	kV	% Mag.	Ang.	MW	Mvar	MW	Mvar	ID	MW	Mvar	Amp	%PF	%Tap
								Bus2	0.199	0.139	33.6	82.1	
								Bus29	0.401	0.170	60.1	92.1	
								SUS 11 Secondary	-2.394	-1.557	394.6	83.8	
6Z-MVC-SWG-21	4.160	100.094	-9.7	0.000	0.000	0.000	0.000	SUS 21 SECONDARY	-3.480	-1.424	521.4	92.6	
								Bus8	1.740	0.712	260.7	92.6	
								Bus9	1.740	0.712	260.7	92.6	
Bus2	4.000	104.188	-8.9	0.000	0.000	0.199	0.138	6Z-MVC-SWG-11	-0.199	-0.138	33.6	82.1	
Bus6	13.200	104.088	-7.7	0.000	0.000	4.342	1.706	6Z-MVA-SWG-1	-4.342	-1.706	196.0	93.1	
Bus7	13.800	99.609	-7.6	0.000	0.000	36.867	22.848	6Z-MVA-SWG-1	-36.867	-22.848	1821.7	85.0	
Bus8	4.160	99.910	-9.8	0.000	0.000	1.738	0.708	6Z-MVC-SWG-21	-1.738	-0.708	260.7	92.6	
Bus9	4.160	99.910	-9.8	0.000	0.000	1.738	0.708	6Z-MVC-SWG-21	-1.738	-0.708	260.7	92.6	
Bus18	4.000	104.259	-8.9	0.000	0.000	0.199	0.138	6Z-MVC-SWG-11	-0.199	-0.138	33.5	82.1	
Bus20	4.000	104.259	-8.9	0.000	0.000	0.199	0.138	6Z-MVC-SWG-11	-0.199	-0.138	33.5	82.1	
Bus21	4.000	104.247	-8.9	0.000	0.000	0.199	0.138	6Z-MVC-SWG-11	-0.199	-0.138	33.6	82.1	
Bus22	4.000	104.235	-8.9	0.000	0.000	0.199	0.138	6Z-MVC-SWG-11	-0.199	-0.138	33.6	82.1	
Bus23	4.000	104.235	-8.9	0.000	0.000	0.199	0.138	6Z-MVC-SWG-11	-0.199	-0.138	33.6	82.1	
Bus24	4.000	104.223	-8.9	0.000	0.000	0.199	0.138	6Z-MVC-SWG-11	-0.199	-0.138	33.6	82.1	
Bus25	4.000	104.223	-8.9	0.000	0.000	0.199	0.138	6Z-MVC-SWG-11	-0.199	-0.138	33.6	82.1	
Bus26	4.000	104.247	-8.9	0.000	0.000	0.199	0.138	6Z-MVC-SWG-11	-0.199	-0.138	33.6	82.1	
Bus28	13.200	104.088	-7.7	0.000	0.000	4.342	1.706	6Z-MVA-SWG-1	-4.342	-1.706	196.0	93.1	
Bus29	4.000	104.242	-8.9	0.000	0.000	0.400	0.169	6Z-MVC-SWG-11	-0.400	-0.169	60.1	92.1	
Bus43	4.000	104.188	-8.9	0.000	0.000	0.199	0.138	6Z-MVC-SWG-11	-0.199	-0.138	33.6	82.1	
FIRE PUMP TAP BUS	0.480	97.473	-11.7	0.000	0.000	0.000	0.000	SUS 12 Secondary	-2.902	-1.387	3968.8	90.2	
								6Z-LVB-SWG-12	2.902	1.387	3968.8	90.2	
* HV BUS	230.000	102.200	0.0	56.817	43.955	0.000	0.000	MPT X WINDING	56.817	43.955	176.4	79.1	-6.875
MPT X WINDING	13.800	99.659	-7.6	0.000	0.000	0.000	0.000	6Z-MVA-SWG-1	56.436	32.715	2738.5	86.5	
								HV BUS	-56.436	-32.715	2738.5	86.5	
SUS 11 Primary	13.800	99.632	-7.6	0.000	0.000	0.000	0.000	6Z-MVA-SWG-1	-2.400	-1.638	122.0	82.6	
								SUS 11 Secondary	2.400	1.638	122.0	82.6	-2.500
SUS 11 Secondary	4.160	100.444	-8.9	0.000	0.000	0.000	0.000	6Z-MVC-SWG-11	2.394	1.557	394.6	83.8	
								SUS 11 Primary	-2.394	-1.557	394.6	83.8	
SUS 12 Primary	13.800	99.630	-7.6	0.000	0.000	0.000	0.000	6Z-MVA-SWG-1	-2.932	-1.665	141.6	87.0	
								SUS 12 Secondary	2.932	1.665	141.6	87.0	-2.500

Project:		ETAP		Page:	11
Location:		20.6.0C		Date:	04-18-2023
Contract:				SN:	KIEWITRWN9
Engineer:				Revision:	Base
Filename:	GE-Southern		Study Case: LF HL NV	Config.:	Normal

Bus		Voltage		Generation		Load		Load Flow					XFMR
ID	kV	% Mag.	Ang.	MW	Mvar	MW	Mvar	ID	MW	Mvar	Amp	%PF	%Tap
SUS 12 Secondary	0.480	97.741	-11.6	0.000	0.000	0.000	0.000	FIRE PUMP TAP BUS	2.907	1.397	3968.8	90.1	
								SUS 12 Primary	-2.907	-1.397	3968.8	90.1	
SUS 21 PRIMARY	13.800	99.289	-7.8	0.000	0.000	0.000	0.000	6Z-MVA-SWG-2	-3.491	-1.565	161.2	91.3	
								SUS 21 SECONDARY	3.491	1.565	161.2	91.3	-2.500
SUS 21 SECONDARY	4.160	100.108	-9.7	0.000	0.000	0.000	0.000	6Z-MVC-SWG-21	3.481	1.424	521.4	92.6	
								SUS 21 PRIMARY	-3.481	-1.424	521.4	92.6	
SUS 22 PRIMARY	13.800	99.290	-7.8	0.000	0.000	0.000	0.000	6Z-MVA-SWG-2	-2.032	-1.525	107.1	80.0	
								SUS 22 SECONDARY	2.032	1.525	107.1	80.0	-2.500
SUS 22 SECONDARY	0.480	97.794	-10.5	0.000	0.000	0.000	0.000	6Z-LVB-SWG-22	2.018	1.372	3001.0	82.7	
								SUS 22 PRIMARY	-2.018	-1.372	3001.0	82.7	

* Indicates a voltage regulated bus (voltage controlled or swing type machine connected to it)

# Indicates a bus with a load mismatch of more than 0.1 MVA

Project:		ETAP		Page:	12
Location:		20.6.0C		Date:	04-18-2023
Contract:				SN:	KIEWITRWN9
Engineer:				Revision:	Base
Filename:	GE-Southern		Study Case: LF HL NV	Config.:	Normal

Bus Loading Summary Report

Bus			Directly Connected Load								Total Bus Load			
			Constant kVA		Constant Z		Constant I		Generic					Percent
ID	kV	Rated Amp	MW	Mvar	MW	Mvar	MW	Mvar	MW	Mvar	MVA	% PF	Amp	Loading
6Z-LVB-MCC-121	0.480	1600.0	0.684	0.406	0.333	0.198					1.183	86.0	1463.5	91.5
6Z-LVB-MCC-122	0.480	1600.0	0.680	0.404	0.331	0.197					1.176	86.0	1454.7	90.9
6Z-LVB-MCC-123	0.480	1600.0			0.868	0.176					0.886	98.0	1095.0	68.4
6Z-LVB-MCC-221	0.480	1600.0	0.842	0.570	0.163	0.111					1.214	82.8	1500.5	93.8
6Z-LVB-MCC-222	0.480	1600.0	0.842	0.570	0.163	0.111					1.214	82.8	1500.5	93.8
6Z-LVB-SWG-12	0.480	4000.0									3.216	90.2	3968.8	99.2 #
6Z-LVB-SWG-22	0.480	4000.0									2.435	82.8	3001.0	75.0
6Z-MVA-SWG-1	13.800	3000.0									65.218	86.5	2738.5	91.3
6Z-MVA-SWG-2	13.800	1200.0									6.329	87.3	266.7	22.2
6Z-MVC-SWG-11	4.160	1200.0									2.856	83.8	394.6	32.9
6Z-MVC-SWG-21	4.160	1200.0									3.760	92.6	521.4	43.4
Bus2	4.000		0.199	0.138							0.242	82.1	33.6	
Bus6	13.200		4.342	1.706							4.665	93.1	196.0	
Bus7	13.800		36.867	22.848							43.373	85.0	1821.7	
Bus8	4.160		1.738	0.708							1.877	92.6	260.7	
Bus9	4.160		1.738	0.708							1.877	92.6	260.7	
Bus18	4.000		0.199	0.138							0.242	82.1	33.5	
Bus20	4.000		0.199	0.138							0.242	82.1	33.5	
Bus21	4.000		0.199	0.138							0.242	82.1	33.6	
Bus22	4.000		0.199	0.138							0.242	82.1	33.6	
Bus23	4.000		0.199	0.138							0.242	82.1	33.6	
Bus24	4.000		0.199	0.138							0.242	82.1	33.6	
Bus25	4.000		0.199	0.138							0.242	82.1	33.6	
Bus26	4.000		0.199	0.138							0.242	82.1	33.6	
Bus28	13.200		4.342	1.706							4.665	93.1	196.0	
Bus29	4.000		0.400	0.169							0.434	92.1	60.1	
Bus43	4.000		0.199	0.138							0.242	82.1	33.6	
FIRE PUMP TAP BUS	0.480										3.216	90.2	3968.8	
HV BUS	230.000										71.835	79.1	176.4	
MPT X WINDING	13.800										65.233	86.5	2738.5	
SUS 11 Primary	13.800										2.906	82.6	122.0	
SUS 11 Secondary	4.160										2.856	83.8	394.6	
SUS 12 Primary	13.800										3.372	87.0	141.6	
SUS 12 Secondary	0.480										3.225	90.1	3968.8	
SUS 21 PRIMARY	13.800										3.826	91.3	161.2	
SUS 21 SECONDARY	4.160										3.761	92.6	521.4	
SUS 22 PRIMARY	13.800										2.541	80.0	107.1	
SUS 22 SECONDARY	0.480										2.440	82.7	3001.0	

Project:		ETAP		Page:	13
Location:		20.6.0C		Date:	04-18-2023
Contract:				SN:	KIEWITRWN9
Engineer:				Revision:	Base
Filename:	GE-Southern	Study Case: LF HL NV		Config.:	Normal

Bus			Directly Connected Load								Total Bus Load			
			Constant kVA		Constant Z		Constant I		Generic					
ID	kV	Rated Amp	MW	Mvar	MW	Mvar	MW	Mvar	MW	Mvar	MVA	% PF	Amp	Percent Loading

* Indicates operating load of a bus exceeds the bus critical limit (100.0% of the Continuous Ampere rating).
\# Indicates operating load of a bus exceeds the bus marginal limit (98.0% of the Continuous Ampere rating).

Project:		ETAP		Page:	14
Location:		20.6.0C		Date:	04-18-2023
Contract:				SN:	KIEWITRWN9
Engineer:				Revision:	Base
Filename:	GE-Southern		Study Case: LF HL NV	Config.:	Normal

Branch Loading Summary Report

CKT / Branch		Busway / Cable & Reactor			Transformer				
		Ampacity	Loading		Capability	Loading (input)		Loading (output)	
ID	Type	(Amp)	Amp	%	(MVA)	MVA	%	MVA	%
6Z-CWS-MFN-01A-100	Cable	124.58	33.55	26.93					
6Z-CWS-MFN-01B-100	Cable	124.58	33.55	26.93					
6Z-CWS-MFN-01C-100	Cable	124.58	33.55	26.93					
6Z-CWS-MFN-01D-100	Cable	124.58	33.55	26.93					
6Z-CWS-MFN-01E-100	Cable	124.58	33.56	26.94					
6Z-CWS-MFN-01F-100	Cable	124.58	33.56	26.94					
6Z-CWS-MFN-01G-100	Cable	124.58	33.56	26.94					
6Z-CWS-MFN-01H-100	Cable	124.58	33.56	26.94					
6Z-CWS-MFN-01I-100	Cable	124.58	33.57	26.95					
6Z-CWS-MFN-01J-100	Cable	124.58	33.57	26.95					
6Z-CWS-MPM-01A-100	Cable	448.89	196.04	43.67					
6Z-CWS-MPM-01B-100	Cable	448.89	196.04	43.67					
6Z-CWS-MPM-02-100	Cable	124.58	60.14	48.28					
6Z-LVB-BUS-22	Cable	5043.36	3001.02	59.50					
6Z-LVB-MCC-121-200	Cable	1965.13	1463.54	74.48					
6Z-LVB-MCC-122-200	Cable	1965.13	1454.70	74.03					
6Z-LVB-MCC-123-200	Cable	1965.13	1095.04	55.72					
6Z-LVB-MCC-221-200	Cable	1943.66	1500.51	77.20					
6Z-LVB-MCC-222-200	Cable	1943.66	1500.51	77.20					
6Z-MVA-BUS-1	Cable	3294.23	2738.49	83.13					
6Z-MVA-BUS-12	Cable	5096.18	3968.79	77.88					
6Z-MVA-SWG-2-100	Cable	448.89	266.66	59.40					
6Z-MVA-SWG-21-100	Cable	1161.03	521.36	44.91					
6Z-MVC-SWG-11-100	Cable	1730.77	394.65	22.80					
6Z-SUS-XFR-11-100	Cable	514.72	122.02	23.71					
6Z-SUS-XFR-12-100	Cable	437.12	141.58	32.39					
6Z-SUS-XFR-21-100	Cable	448.89	161.19	35.91					
6Z-SUS-XFR-22-100	Cable	387.01	107.06	27.66					
DCC1 FEEDER	Cable	444.45	260.68	58.65					
DCC2 FEEDER	Cable	444.45	260.68	58.65					
Linde 1 Feeder	Cable	5147.16	1821.71	35.39					
6Z-MPT-XFR-1	Transformer				71.668	71.835	100.2	65.233	91.0
6Z-SUS-XFR-11	Transformer				8.750	2.906	33.2	2.856	32.6

Project:		ETAP		Page:	15
Location:		20.6.0C		Date:	04-18-2023
Contract:				SN:	KIEWITRWN9
Engineer:				Revision:	Base
Filename:	GE-Southern		Study Case: LF HL NV	Config.:	Normal

CKT / Branch		Busway / Cable & Reactor			Transformer				
						Loading (input)		Loading (output)	
ID	Type	Ampacity (Amp)	Loading Amp	%	Capability (MVA)	MVA	%	MVA	%
6Z-SUS-XFR-12	Transformer				3.333	3.372	101.2	3.225	96.8
6Z-SUS-XFR-21	Transformer				8.750	3.826	43.7	3.761	43.0
6Z-SUS-XFR-22	Transformer				3.333	2.541	76.2	2.440	73.2

* Indicates a branch with operating load exceeding the branch capability.

Project:		ETAP		Page:	16
Location:		20.6.0C		Date:	04-18-2023
Contract:				SN:	KIEWITRWN9
Engineer:				Revision:	Base
Filename:	GE-Southern		Study Case: LF HL NV	Config.:	Normal

Branch Losses Summary Report

Branch ID	From-To Bus Flow		To-From Bus Flow		Losses		% Bus Voltage		Vd % Drop
	MW	Mvar	MW	Mvar	kW	kvar	From	To	in Vmag
6Z-CWS-MFN-01A-100	0.199	0.139	-0.199	-0.138	0.3	0.3	100.4	104.3	0.18
6Z-CWS-MFN-01B-100	0.199	0.139	-0.199	-0.138	0.3	0.3	100.4	104.3	0.18
6Z-CWS-MFN-01C-100	0.199	0.139	-0.199	-0.138	0.4	0.3	100.4	104.2	0.19
6Z-CWS-MFN-01D-100	0.199	0.139	-0.199	-0.138	0.4	0.3	100.4	104.2	0.19
6Z-CWS-MFN-01E-100	0.199	0.139	-0.199	-0.138	0.4	0.3	100.4	104.2	0.20
6Z-CWS-MFN-01F-100	0.199	0.139	-0.199	-0.138	0.4	0.3	100.4	104.2	0.20
6Z-CWS-MFN-01G-100	0.199	0.139	-0.199	-0.138	0.4	0.3	100.4	104.2	0.21
6Z-CWS-MFN-01H-100	0.199	0.139	-0.199	-0.138	0.4	0.3	100.4	104.2	0.21
6Z-CWS-MFN-01I-100	0.199	0.139	-0.199	-0.138	0.5	0.4	100.4	104.2	0.25
6Z-CWS-MFN-01J-100	0.199	0.139	-0.199	-0.138	0.5	0.4	100.4	104.2	0.25
6Z-CWS-MPM-01A-100	4.344	1.711	-4.342	-1.706	1.9	4.6	99.6	104.1	0.07
6Z-CWS-MPM-01B-100	4.344	1.711	-4.342	-1.706	1.9	4.6	99.6	104.1	0.07
6Z-CWS-MPM-02-100	0.401	0.170	-0.400	-0.169	0.7	0.5	100.4	104.2	0.20
6Z-LVB-BUS-22	-2.015	-1.367	2.018	1.372	2.9	5.3	97.6	97.8	0.22
6Z-LVB-MCC-121-200	-1.018	-0.604	1.019	0.606	1.7	2.5	97.2	97.5	0.23
6Z-LVB-MCC-122-200	-1.011	-0.600	1.013	0.603	1.7	2.5	97.2	97.5	0.23
6Z-LVB-MCC-123-200	-0.868	-0.176	0.869	0.178	1.0	1.4	97.3	97.5	0.14
6Z-LVB-MCC-221-200	-1.005	-0.681	1.007	0.683	1.9	2.5	97.3	97.6	0.24
6Z-LVB-MCC-222-200	-1.005	-0.681	1.007	0.683	1.9	2.5	97.3	97.6	0.24
6Z-MPT-XFR-1	56.817	43.955	-56.436	-32.715	381.0	11240.4	102.2	99.7	2.54
6Z-MVA-BUS-1	-56.428	-32.699	56.436	32.715	8.3	15.3	99.6	99.7	0.02
6Z-MVA-BUS-12	-2.902	-1.387	2.907	1.397	5.0	10.1	97.5	97.7	0.27
6Z-MVA-SWG-2-100	5.534	3.116	-5.523	-3.091	10.7	25.3	99.6	99.3	0.34
6Z-MVA-SWG-21-100	-3.480	-1.424	3.481	1.424	0.4	0.5	100.1	100.1	0.01
6Z-MVC-SWG-11-100	-2.394	-1.557	2.394	1.557	0.2	0.5	100.4	100.4	0.02
6Z-SUS-XFR-11	2.400	1.638	-2.394	-1.557	5.9	80.5	99.6	100.4	0.81
6Z-SUS-XFR-11-100	2.400	1.638	-2.400	-1.638	0.1	0.1	99.6	99.6	0.00
6Z-SUS-XFR-12	2.932	1.665	-2.907	-1.397	25.1	268.0	99.6	97.7	1.89
6Z-SUS-XFR-12-100	2.932	1.665	-2.932	-1.665	0.1	0.2	99.6	99.6	0.01
6Z-SUS-XFR-21	3.491	1.565	-3.481	-1.424	10.4	140.5	99.3	100.1	0.82
6Z-SUS-XFR-21-100	3.491	1.565	-3.491	-1.565	0.1	0.3	99.3	99.3	0.01
6Z-SUS-XFR-22	2.032	1.525	-2.018	-1.372	14.4	153.2	99.3	97.8	1.50
6Z-SUS-XFR-22-100	2.032	1.526	-2.032	-1.525	0.1	0.1	99.3	99.3	0.01
DCC1 FEEDER	1.740	0.712	-1.738	-0.708	2.3	3.4	100.1	99.9	0.18

Project:		ETAP		Page:	17
Location:		20.6.0C		Date:	04-18-2023
Contract:				SN:	KIEWITRWN9
Engineer:				Revision:	Base
Filename:	GE-Southern	Study Case: LF HL NV		Config.:	Normal

Branch ID	From-To Bus Flow		To-From Bus Flow		Losses		% Bus Voltage		Vd % Drop
	MW	Mvar	MW	Mvar	kW	kvar	From	To	in Vmag
DCC2 FEEDER	1.740	0.712	-1.738	-0.708	2.3	3.4	100.1	99.9	0.18
Linde 1 Feeder	36.874	22.859	-36.867	-22.848	7.1	10.5	99.6	99.6	0.03
					493.1	11981.8			

* This Transmission Line includes Series Capacitor.

Project:		ETAP		Page:	18
Location:		20.6.0C		Date:	04-18-2023
Contract:				SN:	KIEWITRWN9
Engineer:				Revision:	Base
Filename:	GE-Southern		Study Case: LF HL NV	Config.:	Normal

Alert Summary Report

% Alert Settings

	Critical	Marginal
Loading		
Bus	100.0	98.0
Cable / Busway	100.0	98.0
Reactor	100.0	98.0
Line	100.0	98.0
Transformer	100.0	98.0
Panel	100.0	98.0
Protective Device	100.0	98.0
Generator	100.0	98.0
Inverter/Charger	100.0	98.0
Bus Voltage		
OverVoltage	105.0	102.0
UnderVoltage	95.0	98.0
Generator Excitation		
OverExcited (Q Max.)	100.0	95.0
UnderExcited (Q Min.)	100.0	

Marginal Report

Device ID	Type	Condition	Rating/Limit	Unit	Operating	% Operating	Phase Type
6Z-LVB-MCC-121	Bus	Under Voltage	0.480	kV	0.467	97.2	3-Phase
6Z-LVB-MCC-122	Bus	Under Voltage	0.480	kV	0.467	97.2	3-Phase
6Z-LVB-MCC-123	Bus	Under Voltage	0.480	kV	0.467	97.3	3-Phase
6Z-LVB-MCC-221	Bus	Under Voltage	0.480	kV	0.467	97.3	3-Phase
6Z-LVB-MCC-222	Bus	Under Voltage	0.480	kV	0.467	97.3	3-Phase
6Z-LVB-SWG-12	Bus	Under Voltage	0.480	kV	0.468	97.5	3-Phase
6Z-LVB-SWG-12	Bus	Overload	4000.000	Amp	3968.787	99.2	3-Phase
6Z-LVB-SWG-22	Bus	Under Voltage	0.480	kV	0.468	97.6	3-Phase
Bus18	Bus	Over Voltage	4.000	kV	4.170	104.3	3-Phase
Bus2	Bus	Over Voltage	4.000	kV	4.168	104.2	3-Phase
Bus20	Bus	Over Voltage	4.000	kV	4.170	104.3	3-Phase
Bus21	Bus	Over Voltage	4.000	kV	4.170	104.2	3-Phase
Bus22	Bus	Over Voltage	4.000	kV	4.169	104.2	3-Phase
Bus23	Bus	Over Voltage	4.000	kV	4.169	104.2	3-Phase
Bus24	Bus	Over Voltage	4.000	kV	4.169	104.2	3-Phase

Project:		ETAP		Page:	19
Location:		20.6.0C		Date:	04-18-2023
Contract:				SN:	KIEWITRWN9
Engineer:				Revision:	Base
Filename:	GE-Southern		Study Case: LF HL NV	Config.:	Normal

Marginal Report

Device ID	Type	Condition	Rating/Limit	Unit	Operating	% Operating	Phase Type
Bus25	Bus	Over Voltage	4.000	kV	4.169	104.2	3-Phase
Bus26	Bus	Over Voltage	4.000	kV	4.170	104.2	3-Phase
Bus28	Bus	Over Voltage	13.200	kV	13.740	104.1	3-Phase
Bus29	Bus	Over Voltage	4.000	kV	4.170	104.2	3-Phase
Bus43	Bus	Over Voltage	4.000	kV	4.168	104.2	3-Phase
Bus6	Bus	Over Voltage	13.200	kV	13.740	104.1	3-Phase
FIRE PUMP TAP BUS	Bus	Under Voltage	0.480	kV	0.468	97.5	3-Phase
HV BUS	Bus	Over Voltage	230.000	kV	235.060	102.2	3-Phase
SUS 12 Secondary	Bus	Under Voltage	0.480	kV	0.469	97.7	3-Phase
SUS 22 SECONDARY	Bus	Under Voltage	0.480	kV	0.469	97.8	3-Phase

SUMMARY OF TOTAL GENERATION, LOADING & DEMAND

	MW	Mvar	MVA	% PF
Source (Swing Buses):	56.817	43.955	71.835	79.09 Lagging
Source (Non-Swing Buses):	0.000	0.000	0.000	
Total Demand:	56.817	43.955	71.835	79.09 Lagging
Total Motor Load:	54.464	31.181	62.758	86.78 Lagging
Total Static Load:	1.860	0.792	2.022	92.00 Lagging
Total Constant I Load:	0.000	0.000	0.000	
Total Generic Load:	0.000	0.000	0.000	
Apparent Losses:	0.493	11.982		
System Mismatch:	0.000	0.000		

Number of Iterations: 3

Project:	**ETAP**	Page:	1
Location:	20.6.0C	Date:	04-18-2023
Contract:		SN:	KIEWITRWN9
Engineer:	Study Case: LF NL NV	Revision:	Base
Filename: GE-Southern		Config.:	Normal

Electrical Transient Analyzer Program

Load Flow Analysis

Loading Category (2): NORMAL

Generation Category (2): NORMAL

Load Diversity Factor: Bus Maximum

	Swing	V-Control	Load	Total
Number of Buses:	1	0	37	38

	XFMR2	XFMR3	Reactor	Line/Cable/ Busway	Impedance	Tie PD	Total
Number of Branches:	5	0	0	31	0	1	37

Method of Solution:	Adaptive Newton-Raphson Method
Maximum No. of Iteration:	99
Precision of Solution:	0.0001000
System Frequency:	60.00 Hz
Unit System:	English
Project Filename:	GE-Southern
Output Filename:	\\kiewitplaza\kegi\Data\ES\20041223-FOA2515_GE_Southern_Linde_Advanced_NGCC_Integration\ENG\Engineering\Elec_Controls\Calcs\ETAP\GE-Southern\LF-4.lfr

Project:		ETAP		Page:	2
Location:		20.6.0C		Date:	04-18-2023
Contract:				SN:	KIEWITRWN9
Engineer:				Revision:	Base
Filename:	GE-Southern		Study Case: LF NL NV	Config.:	Normal

Adjustments

Tolerance	Apply Adjustments	Individual /Global	Percent
Transformer Impedance:	Yes	Individual	
Reactor Impedance:	Yes	Individual	
Overload Heater Resistance:	No		
Transmission Line Length:	Yes	Individual	
Cable / Busway Length:	Yes	Individual	

Temperature Correction	Apply Adjustments	Individual /Global	Degree C
Transmission Line Resistance:	Yes	Individual	
Cable / Busway Resistance:	Yes	Individual	

Project:		ETAP		Page:	3
Location:		20.6.0C		Date:	04-18-2023
Contract:				SN:	KIEWITRWN9
Engineer:				Revision:	Base
Filename:	GE-Southern		Study Case: LF NL NV	Config.:	Normal

Bus Input Data

Bus			Initial Voltage		Load							
					Constant kVA		Constant Z		Constant I		Generic	
ID	kV	Sub-sys	% Mag.	Ang.	MW	Mvar	MW	Mvar	MW	Mvar	MW	Mvar
6Z-LVB-MCC-121	0.480	1	100.0	0.0	0.616	0.365	0.317	0.188				
6Z-LVB-MCC-122	0.480	1	100.0	0.0	0.612	0.363	0.315	0.187				
6Z-LVB-MCC-123	0.480	1	100.0	0.0			0.917	0.186				
6Z-LVB-MCC-221	0.480	1	100.0	0.0	0.758	0.513	0.155	0.105				
6Z-LVB-MCC-222	0.480	1	100.0	0.0	0.758	0.513	0.155	0.105				
6Z-LVB-SWG-12	0.480	1	100.0	0.0								
6Z-LVB-SWG-22	0.480	1	100.0	0.0								
6Z-MVA-SWG-1	13.800	1	100.0	0.0								
6Z-MVA-SWG-2	13.800	1	100.0	0.0								
6Z-MVC-SWG-11	4.160	1	100.0	0.0								
6Z-MVC-SWG-21	4.160	1	100.0	0.0								
Bus2	4.000	1	100.0	0.0	0.179	0.125						
Bus6	13.200	1	100.0	0.0	3.908	1.536						
Bus7	13.800	1	100.0	0.0	36.867	22.848						
Bus8	4.160	1	100.0	0.0	1.564	0.638						
Bus9	4.160	1	100.0	0.0	1.564	0.638						
Bus18	4.000	1	100.0	0.0	0.179	0.125						
Bus20	4.000	1	100.0	0.0	0.179	0.125						
Bus21	4.000	1	100.0	0.0	0.179	0.125						
Bus22	4.000	1	100.0	0.0	0.179	0.125						
Bus23	4.000	1	100.0	0.0	0.179	0.125						
Bus24	4.000	1	100.0	0.0	0.179	0.125						
Bus25	4.000	1	100.0	0.0	0.179	0.125						
Bus26	4.000	1	100.0	0.0	0.179	0.125						
Bus28	13.200	1	100.0	0.0	3.908	1.536						
Bus29	4.000	1	100.0	0.0	0.360	0.152						
Bus43	4.000	1	100.0	0.0	0.179	0.125						
FIRE PUMP TAP BUS	0.480	1	100.0	0.0								
HV BUS	230.000	1	102.2	0.0								
MPT X WINDING	13.800	1	100.0	0.0								
SUS 11 Primary	13.800	1	100.0	0.0								
SUS 11 Secondary	4.160	1	100.0	0.0								
SUS 12 Primary	13.800	1	100.0	0.0								

Project:	ETAP	Page:	4
Location:	20.6.0C	Date:	04-18-2023
Contract:		SN:	KIEWITRWN9
Engineer:	Study Case: LF NL NV	Revision:	Base
Filename: GE-Southern		Config.:	Normal

Bus			Initial Voltage		Load							
					Constant kVA		Constant Z		Constant I		Generic	
ID	kV	Sub-sys	% Mag.	Ang.	MW	Mvar	MW	Mvar	MW	Mvar	MW	Mvar
SUS 12 Secondary	0.480	1	100.0	0.0								
SUS 21 PRIMARY	13.800	1	100.0	0.0								
SUS 21 SECONDARY	4.160	1	100.0	0.0								
SUS 22 PRIMARY	13.800	1	100.0	0.0								
SUS 22 SECONDARY	0.480	1	100.0	0.0								
Total Number of Buses: 38					52.705	30.348	1.860	0.772	0.000	0.000	0.000	0.000

Generation Bus				Voltage		Generation			Mvar Limits	
ID	kV	Type	Sub-sys	% Mag.	Angle	MW	Mvar	% PF	Max	Min
HV BUS	230.000	Swing	1	102.2	0.0					
						0.000	0.000			

Project:		ETAP		Page:	5
Location:		20.6.0C		Date:	04-18-2023
Contract:				SN:	KIEWITRWN9
Engineer:				Revision:	Base
Filename:	GE-Southern		Study Case: LF NL NV	Config.:	Normal

Line/Cable/Busway Input Data

ohms or siemens/1000 ft per Conductor (Cable) or per Phase (Line/Busway)

Line/Cable/Busway ID	Library	Size	Length Adj. (ft)	Length % Tol.	#/Phase	T (°C)	R	X	Y
6Z-CWS-MFN-01A-100	5.0NCUS1	1/0	800.0	0.0	1	75	0.127806	0.098000	
6Z-CWS-MFN-01B-100	5.0NCUS1	1/0	800.0	0.0	1	75	0.127806	0.098000	
6Z-CWS-MFN-01C-100	5.0NCUS1	1/0	850.0	0.0	1	75	0.127806	0.098000	
6Z-CWS-MFN-01D-100	5.0NCUS1	1/0	850.0	0.0	1	75	0.127806	0.098000	
6Z-CWS-MFN-01E-100	5.0NCUS1	1/0	900.0	0.0	1	75	0.127806	0.098000	
6Z-CWS-MFN-01F-100	5.0NCUS1	1/0	900.0	0.0	1	75	0.127806	0.098000	
6Z-CWS-MFN-01G-100	5.0NCUS1	1/0	950.0	0.0	1	75	0.127806	0.098000	
6Z-CWS-MFN-01H-100	5.0NCUS1	1/0	950.0	0.0	1	75	0.127806	0.098000	
6Z-CWS-MFN-01I-100	5.0NCUS1	1/0	1100.0	0.0	1	75	0.127806	0.098000	
6Z-CWS-MFN-01J-100	5.0NCUS1	1/0	1100.0	0.0	1	75	0.127806	0.098000	
6Z-CWS-MPM-01A-100	15NCUS1	500	500.0	0.0	1	75	0.033382	0.079000	
6Z-CWS-MPM-01B-100	15NCUS1	500	500.0	0.0	1	75	0.033382	0.079000	
6Z-CWS-MPM-02-100	5.0NCUS1	1/0	500.0	0.0	1	75	0.127806	0.098000	
6Z-LVB-BUS-22	0.6NCUN1	750	50.0	0.0	9	75	0.019400	0.035600	
6Z-LVB-MCC-121-200	0.6NCUN1	500	50.0	0.0	5	75	0.027000	0.039600	
6Z-LVB-MCC-122-200	0.6NCUN1	500	50.0	0.0	5	75	0.027000	0.039600	
6Z-LVB-MCC-123-200	0.6NCUN1	500	50.0	0.0	5	75	0.027000	0.039600	
6Z-LVB-MCC-221-200	0.6NCUN1	500	50.0	0.0	5	75	0.027600	0.037300	
6Z-LVB-MCC-222-200	0.6NCUN1	500	50.0	0.0	5	75	0.027600	0.037300	
6Z-MVA-BUS-1	15NCUN1	750	100.0	0.0	5	75	0.018503	0.034000	
6Z-MVA-BUS-12	0.6NCUN1	750	50.0	0.0	9	75	0.019000	0.038400	
6Z-MVA-SWG-2-100	15NCUS1	500	1500.0	0.0	1	75	0.033382	0.079000	
6Z-MVA-SWG-21-100	5.0NCUS3	500	50.0	0.0	3	75	0.028400	0.035100	
6Z-MVC-SWG-11-100	5.0NCUS1	500	50.0	0.0	3	75	0.026222	0.061417	
6Z-SUS-XFR-11-100	15NCUS1	500	50.0	0.0	1	75	0.028400	0.042100	
6Z-SUS-XFR-12-100	5.0NCUS1	350	50.0	0.0	1	75	0.037095	0.063246	
6Z-SUS-XFR-21-100	15NCUS1	500	50.0	0.0	1	75	0.033382	0.079000	
6Z-SUS-XFR-22-100	5.0NCUS3	500	100.0	0.0	1	75	0.028400	0.035100	
DCC1 FEEDER	5.0NCUS1	500	400.0	0.0	1	75	0.028400	0.042100	
DCC2 FEEDER	5.0NCUS1	500	400.0	0.0	1	75	0.028400	0.042100	
Linde 1 Feeder	15NCUS1	500	250.0	0.0	10	75	0.028400	0.042100	

Line / Cable / Busway resistances are listed at the specified temperatures.

Project:	ETAP	Page:	6
Location:	20.6.0C	Date:	04-18-2023
Contract:		SN:	KIEWITRWN9
Engineer:		Revision:	Base
Filename: GE-Southern	Study Case: LF NL NV	Config.:	Normal

2-Winding Transformer Input Data

Transformer		Rating					Z Variation			% Tap Setting		Adjusted	Phase Shift	
ID	Phase	MVA	Prim. kV	Sec. kV	% Z1	X1/R1	+ 5%	- 5%	% Tol.	Prim.	Sec.	% Z	Type	Angle
6Z-MPT-XFR-1	3-Phase	43.000	230.000	13.800	10.50	29.50	0	0	7.5	0	0	11.2875	Dyn	0.000
6Z-SUS-XFR-11	3-Phase	7.000	13.800	4.160	6.50	13.55	0	0	7.5	-2.500	0	6.9875	Dyn	0.000
6Z-SUS-XFR-12	3-Phase	2.500	13.800	0.480	5.75	10.67	0	0	7.5	-2.500	0	6.1813	Dyn	0.000
6Z-SUS-XFR-21	3-Phase	7.000	13.800	4.160	6.50	13.55	0	0	7.5	-2.500	0	6.9875	Dyn	0.000
6Z-SUS-XFR-22	3-Phase	2.500	13.800	0.480	5.75	10.67	0	0	7.5	-2.500	0	6.1813	Dyn	0.000

2-Winding Transformer Load Tap Changer (LTC) Settings

Transformer	Connected Buses ("*" LTC Side)		Transformer Load Tap Changer Setting					
ID	Primary Bus ID	Secondary Bus ID	% Min. Tap	% Max. Tap	% Step	Regulated Bus ID	% V	kV
6Z-MPT-XFR-1	* IIV BUS	MPT X WINDING	-10.00	10.00	0.625	MPT X WINDING	100.00	13.800

Project:	ETAP	Page:	7
Location:	20.6.0C	Date:	04-18-2023
Contract:		SN:	KIEWITRWN9
Engineer:		Revision:	Base
Filename: GE-Southern	Study Case: LF NL NV	Config.:	Normal

Branch Connections

CKT/Branch		Connected Bus ID		% Impedance, Pos. Seq., 100 MVA Base			
ID	Type	From Bus	To Bus	R	X	Z	Y
6Z-MPT-XFR-1	2W XFMR	HV BUS	MPT X WINDING	0.89	26.23	26.25	
6Z-SUS-XFR-11	2W XFMR	SUS 11 Primary	SUS 11 Secondary	7.16	97.06	97.33	
6Z-SUS-XFR-12	2W XFMR	SUS 12 Primary	SUS 12 Secondary	22.49	240.02	241.07	
6Z-SUS-XFR-21	2W XFMR	SUS 21 PRIMARY	SUS 21 SECONDARY	7.16	97.06	97.33	
6Z-SUS-XFR-22	2W XFMR	SUS 22 PRIMARY	SUS 22 SECONDARY	22.49	240.02	241.07	
6Z-CWS-MFN-01A-100	Cable	6Z-MVC-SWG-11	Bus18	59.08	45.30	74.45	
6Z-CWS-MFN-01B-100	Cable	6Z-MVC-SWG-11	Bus20	59.08	45.30	74.45	
6Z-CWS-MFN-01C-100	Cable	6Z-MVC-SWG-11	Bus21	62.77	48.13	79.10	
6Z-CWS-MFN-01D-100	Cable	6Z-MVC-SWG-11	Bus26	62.77	48.13	79.10	
6Z-CWS-MFN-01E-100	Cable	6Z-MVC-SWG-11	Bus22	66.47	50.97	83.76	
6Z-CWS-MFN-01F-100	Cable	6Z-MVC-SWG-11	Bus23	66.47	50.97	83.76	
6Z-CWS-MFN-01G-100	Cable	6Z-MVC-SWG-11	Bus24	70.16	53.80	88.41	
6Z-CWS-MFN-01H-100	Cable	6Z-MVC-SWG-11	Bus25	70.16	53.80	88.41	
6Z-CWS-MFN-01I-100	Cable	6Z-MVC-SWG-11	Bus43	81.24	62.29	102.37	
6Z-CWS-MFN-01J-100	Cable	6Z-MVC-SWG-11	Bus2	81.24	62.29	102.37	
6Z-CWS-MPM-01A-100	Cable	6Z-MVA-SWG-1	Bus6	0.88	2.07	2.25	
6Z-CWS-MPM-01B-100	Cable	6Z-MVA-SWG-1	Bus28	0.88	2.07	2.25	
6Z-CWS-MPM-02-100	Cable	6Z-MVC-SWG-11	Bus29	36.93	28.31	46.53	
6Z-LVB-BUS-22	Cable	SUS 22 SECONDARY	6Z-LVB-SWG-22	4.68	8.58	9.78	
6Z-LVB-MCC-121-200	Cable	6Z-LVB-SWG-12	6Z-LVB-MCC-121	11.72	17.19	20.80	
6Z-LVB-MCC-122-200	Cable	6Z-LVB-SWG-12	6Z-LVB-MCC-122	11.72	17.19	20.80	
6Z-LVB-MCC-123-200	Cable	6Z-LVB-SWG-12	6Z-LVB-MCC-123	11.72	17.19	20.80	
6Z-LVB-MCC-221-200	Cable	6Z-LVB-SWG-22	6Z-LVB-MCC-221	11.98	16.19	20.14	
6Z-LVB-MCC-222-200	Cable	6Z-LVB-SWG-22	6Z-LVB-MCC-222	11.98	16.19	20.14	
6Z-MVA-BUS-1	Cable	MPT X WINDING	6Z-MVA-SWG-1	0.02	0.04	0.04	
6Z-MVA-BUS-12	Cable	SUS 12 Secondary	FIRE PUMP TAP BUS	4.58	9.26	10.33	
6Z-MVA-SWG-2-100	Cable	6Z-MVA-SWG-1	6Z-MVA-SWG-2	2.63	6.22	6.76	
6Z-MVA-SWG-21-100	Cable	SUS 21 SECONDARY	6Z-MVC-SWG-21	0.27	0.34	0.43	
6Z-MVC-SWG-11-100	Cable	SUS 11 Secondary	6Z-MVC-SWG-11	0.25	0.59	0.64	
6Z-SUS-XFR-11-100	Cable	6Z-MVA-SWG-1	SUS 11 Primary	0.07	0.11	0.13	
6Z-SUS-XFR-12-100	Cable	6Z-MVA-SWG-1	SUS 12 Primary	0.10	0.17	0.19	
6Z-SUS-XFR-21-100	Cable	6Z-MVA-SWG-2	SUS 21 PRIMARY	0.09	0.21	0.23	
6Z-SUS-XFR-22-100	Cable	6Z-MVA-SWG-2	SUS 22 PRIMARY	0.15	0.18	0.24	
DCC1 FEEDER	Cable	6Z-MVC-SWG-21	Bus8	6.56	9.73	11.74	
DCC2 FEEDER	Cable	6Z-MVC-SWG-21	Bus9	6.56	9.73	11.74	
Linde 1 Feeder	Cable	6Z-MVA-SWG-1	Bus7	0.04	0.06	0.07	

Project:		ETAP		Page:	8
Location:		20.6.0C		Date:	04-18-2023
Contract:				SN:	KIEWITRWN9
Engineer:				Revision:	Base
Filename:	GE-Southern		Study Case: LF NL NV	Config.:	Normal

CKT/Branch		Connected Bus ID		% Impedance, Pos. Seq., 100 MVA Base			
ID	Type	From Bus	To Bus	R	X	Z	Y
CB12	Tie Breakr	FIRE PUMP TAP BUS	6Z-LVB-SWG-12				

Project:		ETAP		Page:	9
Location:		20.6.0C		Date:	04-18-2023
Contract:				SN:	KIEWITRWN9
Engineer:				Revision:	Base
Filename:	GE-Southern		Study Case: LF NL NV	Config.:	Normal

LOAD FLOW REPORT

Bus		Voltage		Generation		Load		Load Flow					XFMR
ID	kV	% Mag.	Ang.	MW	Mvar	MW	Mvar	ID	MW	Mvar	Amp	%PF	%Tap
6Z-LVB-MCC-121	0.480	97.228	-11.3	0.000	0.000	0.916	0.543	6Z-LVB-SWG-12	-0.916	-0.543	1317.3	86.0	
6Z-LVB-MCC-122	0.480	97.229	-11.3	0.000	0.000	0.910	0.540	6Z-LVB-SWG-12	-0.910	-0.540	1309.3	86.0	
6Z-LVB-MCC-123	0.480	97.299	-11.3	0.000	0.000	0.868	0.176	6Z-LVB-SWG-12	-0.868	-0.176	1094.6	98.0	
6Z-LVB-MCC-221	0.480	97.391	-10.1	0.000	0.000	0.905	0.613	6Z-LVB-SWG-22	-0.905	-0.613	1350.0	82.8	
6Z-LVB-MCC-222	0.480	97.391	-10.1	0.000	0.000	0.905	0.613	6Z-LVB-SWG-22	-0.905	-0.613	1350.0	82.8	
6Z-LVB-SWG-12	0.480	97.434	-11.2	0.000	0.000	0.000	0.000	6Z-LVB-MCC-121	0.917	0.545	1317.3	85.9	
								6Z-LVB-MCC-122	0.912	0.542	1309.3	85.9	
								6Z-LVB-MCC-123	0.869	0.178	1094.6	98.0	
								FIRE PUMP TAP BUS	-2.697	-1.265	3678.0	90.5	
6Z-LVB-SWG-22	0.480	97.604	-10.1	0.000	0.000	0.000	0.000	SUS 22 SECONDARY	-1.813	-1.230	2700.0	82.8	
								6Z-LVB-MCC-221	0.907	0.615	1350.0	82.8	
								6Z-LVB-MCC-222	0.907	0.615	1350.0	82.8	
6Z-MVA-SWG-1	13.800	99.200	-7.5	0.000	0.000	0.000	0.000	Bus6	3.909	1.540	177.2	93.0	
								Bus28	3.909	1.540	177.2	93.0	
								MPT X WINDING	-54.552	-31.683	2660.6	86.5	
								6Z-MVA-SWG-2	4.976	2.775	240.3	87.3	
								SUS 11 Primary	2.159	1.467	110.1	82.7	
								SUS 12 Primary	2.723	1.504	131.2	87.5	
								Bus7	36.874	22.859	1829.7	85.0	
6Z-MVA-SWG-2	13.800	98.894	-7.6	0.000	0.000	0.000	0.000	6Z-MVA-SWG-1	-4.968	-2.754	240.3	87.5	
								SUS 21 PRIMARY	3.141	1.396	145.4	91.4	
								SUS 22 PRIMARY	1.827	1.358	96.3	80.3	
6Z-MVC-SWG-11	4.160	100.156	-8.6	0.000	0.000	0.000	0.000	Bus18	0.179	0.125	30.3	82.1	
								Bus20	0.179	0.125	30.3	82.1	
								Bus21	0.179	0.125	30.3	82.1	
								Bus26	0.179	0.125	30.3	82.1	
								Bus22	0.179	0.125	30.3	82.1	
								Bus23	0.179	0.125	30.3	82.1	
								Bus24	0.179	0.125	30.3	82.1	
								Bus25	0.179	0.125	30.3	82.1	
								Bus43	0.179	0.125	30.3	82.1	

Project:		ETAP		Page:	10
Location:		20.6.0C		Date:	04-18-2023
Contract:				SN:	KIEWITRWN9
Engineer:				Revision:	Base
Filename:	GE-Southern		Study Case: LF NL NV	Config.:	Normal

Bus		Voltage		Generation		Load		Load Flow					XFMR
ID	kV	% Mag.	Ang.	MW	Mvar	MW	Mvar	ID	MW	Mvar	Amp	%PF	%Tap
								Bus2	0.179	0.125	30.3	82.1	
								Bus29	0.361	0.153	54.3	92.1	
								SUS 11 Secondary	-2.154	-1.401	356.1	83.8	
6Z-MVC-SWG-21	4.160	99.859	-9.3	0.000	0.000	0.000	0.000	SUS 21 SECONDARY	-3.132	-1.281	470.2	92.6	
								Bus8	1.566	0.640	235.1	92.6	
								Bus9	1.566	0.640	235.1	92.6	
Bus2	4.000	103.930	-8.6	0.000	0.000	0.179	0.125	6Z-MVC-SWG-11	-0.179	-0.125	30.3	82.1	
Bus6	13.200	103.639	-7.5	0.000	0.000	3.908	1.536	6Z-MVA-SWG-1	-3.908	-1.536	177.2	93.1	
Bus7	13.800	99.173	-7.5	0.000	0.000	36.867	22.848	6Z-MVA-SWG-1	-36.867	-22.848	1829.7	85.0	
Bus8	4.160	99.693	-9.4	0.000	0.000	1.564	0.638	6Z-MVC-SWG-21	-1.564	-0.638	235.1	92.6	
Bus9	4.160	99.693	-9.4	0.000	0.000	1.564	0.638	6Z-MVC-SWG-21	-1.564	-0.638	235.1	92.6	
Bus18	4.000	103.993	-8.6	0.000	0.000	0.179	0.125	6Z-MVC-SWG-11	-0.179	-0.125	30.3	82.1	
Bus20	4.000	103.993	-8.6	0.000	0.000	0.179	0.125	6Z-MVC-SWG-11	-0.179	-0.125	30.3	82.1	
Bus21	4.000	103.983	-8.6	0.000	0.000	0.179	0.125	6Z-MVC-SWG-11	-0.179	-0.125	30.3	82.1	
Bus22	4.000	103.972	-8.6	0.000	0.000	0.179	0.125	6Z-MVC-SWG-11	-0.179	-0.125	30.3	82.1	
Bus23	4.000	103.972	-8.6	0.000	0.000	0.179	0.125	6Z-MVC-SWG-11	-0.179	-0.125	30.3	82.1	
Bus24	4.000	103.962	-8.6	0.000	0.000	0.179	0.125	6Z-MVC-SWG-11	-0.179	-0.125	30.3	82.1	
Bus25	4.000	103.962	-8.6	0.000	0.000	0.179	0.125	6Z-MVC-SWG-11	-0.179	-0.125	30.3	82.1	
Bus26	4.000	103.983	-8.6	0.000	0.000	0.179	0.125	6Z-MVC-SWG-11	-0.179	-0.125	30.3	82.1	
Bus28	13.200	103.639	-7.5	0.000	0.000	3.908	1.536	6Z-MVA-SWG-1	-3.908	-1.536	177.2	93.1	
Bus29	4.000	103.979	-8.6	0.000	0.000	0.360	0.152	6Z-MVC-SWG-11	-0.360	-0.152	54.3	92.1	
Bus43	4.000	103.930	-8.6	0.000	0.000	0.179	0.125	6Z-MVC-SWG-11	-0.179	-0.125	30.3	82.1	
FIRE PUMP TAP BUS	0.480	97.434	-11.2	0.000	0.000	0.000	0.000	SUS 12 Secondary	-2.697	-1.265	3678.0	90.5	
								6Z-LVB-SWG-12	2.697	1.265	3678.0	90.5	
* IIV BUS	230.000	102.200	0.0	54.920	42.308	0.000	0.000	MPT X WINDING	54.920	42.308	170.3	79.2	-6.250
MPT X WINDING	13.800	99.222	-7.5	0.000	0.000	0.000	0.000	6Z-MVA-SWG-1	54.560	31.698	2660.6	86.5	
								IIV BUS	-54.560	-31.698	2660.6	86.5	
SUS 11 Primary	13.800	99.197	-7.5	0.000	0.000	0.000	0.000	6Z-MVA-SWG-1	-2.159	-1.467	110.1	82.7	
								SUS 11 Secondary	2.159	1.467	110.1	82.7	-2.500
SUS 11 Secondary	4.160	100.170	-8.6	0.000	0.000	0.000	0.000	6Z-MVC-SWG-11	2.155	1.401	356.1	83.8	
								SUS 11 Primary	-2.155	-1.401	356.1	83.8	
SUS 12 Primary	13.800	99.195	-7.5	0.000	0.000	0.000	0.000	6Z-MVA-SWG-1	-2.723	-1.504	131.2	87.5	
								SUS 12 Secondary	2.723	1.504	131.2	87.5	-2.500

Project:		ETAP		Page:	11
Location:		20.6.0C		Date:	04-18-2023
Contract:				SN:	KIEWITRWN9
Engineer:				Revision:	Base
Filename:	GE-Southern		Study Case: LF NL NV	Config.:	Normal

Bus		Voltage		Generation		Load		Load Flow					XFMR
ID	kV	% Mag.	Ang.	MW	Mvar	MW	Mvar	ID	MW	Mvar	Amp	%PF	%Tap
SUS 12 Secondary	0.480	97.682	-11.1	0.000	0.000	0.000	0.000	FIRE PUMP TAP BUS	2.702	1.274	3678.0	90.5	
								SUS 12 Primary	-2.702	-1.274	3678.0	90.5	
SUS 21 PRIMARY	13.800	98.889	-7.6	0.000	0.000	0.000	0.000	6Z-MVA-SWG-2	-3.140	-1.396	145.4	91.4	
								SUS 21 SECONDARY	3.140	1.396	145.4	91.4	-2.500
SUS 21 SECONDARY	4.160	99.872	-9.3	0.000	0.000	0.000	0.000	6Z-MVC-SWG-21	3.132	1.281	470.2	92.6	
								SUS 21 PRIMARY	-3.132	-1.281	470.2	92.6	
SUS 22 PRIMARY	13.800	98.889	-7.6	0.000	0.000	0.000	0.000	6Z-MVA-SWG-2	-1.827	-1.358	96.3	80.3	
								SUS 22 SECONDARY	1.827	1.358	96.3	80.3	-2.500
SUS 22 SECONDARY	0.480	97.799	-10.0	0.000	0.000	0.000	0.000	6Z-LVB-SWG-22	1.816	1.234	2700.0	82.7	
								SUS 22 PRIMARY	-1.816	-1.234	2700.0	82.7	

* Indicates a voltage regulated bus (voltage controlled or swing type machine connected to it)

# Indicates a bus with a load mismatch of more than 0.1 MVA

Project:	ETAP	Page:	12
Location:	20.6.0C	Date:	04-18-2023
Contract:		SN:	KIEWITRWN9
Engineer:	Study Case: LF NL NV	Revision:	Base
Filename: GE-Southern		Config.:	Normal

Bus Loading Summary Report

Bus			Directly Connected Load								Total Bus Load			
			Constant kVA		Constant Z		Constant I		Generic					Percent
ID	kV	Rated Amp	MW	Mvar	MW	Mvar	MW	Mvar	MW	Mvar	MVA	% PF	Amp	Loading
6Z-LVB-MCC-121	0.480	1600.0	0.616	0.365	0.300	0.178					1.065	86.0	1317.3	82.3
6Z-LVB-MCC-122	0.480	1600.0	0.612	0.363	0.298	0.177					1.058	86.0	1309.3	81.8
6Z-LVB-MCC-123	0.480	1600.0			0.868	0.176					0.885	98.0	1094.6	68.4
6Z-LVB-MCC-221	0.480	1600.0	0.758	0.513	0.147	0.100					1.093	82.8	1350.0	84.4
6Z-LVB-MCC-222	0.480	1600.0	0.758	0.513	0.147	0.100					1.093	82.8	1350.0	84.4
6Z-LVB-SWG-12	0.480	4000.0									2.979	90.5	3678.0	92.0
6Z-LVB-SWG-22	0.480	4000.0									2.191	82.8	2700.0	67.5
6Z-MVA-SWG-1	13.800	3000.0									63.085	86.5	2660.6	88.7
6Z-MVA-SWG-2	13.800	1200.0									5.680	87.5	240.3	20.0
6Z-MVC-SWG-11	4.160	1200.0									2.570	83.8	356.1	29.7
6Z-MVC-SWG-21	4.160	1200.0									3.384	92.6	470.2	39.2
Bus2	4.000		0.179	0.125							0.218	82.1	30.3	
Bus6	13.200		3.908	1.536							4.199	93.1	177.2	
Bus7	13.800		36.867	22.848							43.373	85.0	1829.7	
Bus8	4.160		1.564	0.638							1.689	92.6	235.1	
Bus9	4.160		1.564	0.638							1.689	92.6	235.1	
Bus18	4.000		0.179	0.125							0.218	82.1	30.3	
Bus20	4.000		0.179	0.125							0.218	82.1	30.3	
Bus21	4.000		0.179	0.125							0.218	82.1	30.3	
Bus22	4.000		0.179	0.125							0.218	82.1	30.3	
Bus23	4.000		0.179	0.125							0.218	82.1	30.3	
Bus24	4.000		0.179	0.125							0.218	82.1	30.3	
Bus25	4.000		0.179	0.125							0.218	82.1	30.3	
Bus26	4.000		0.179	0.125							0.218	82.1	30.3	
Bus28	13.200		3.908	1.536							4.199	93.1	177.2	
Bus29	4.000		0.360	0.152							0.391	92.1	54.3	
Bus43	4.000		0.179	0.125							0.218	82.1	30.3	
FIRE PUMP TAP BUS	0.480										2.979	90.5	3678.0	
HV BUS	230.000										69.326	79.2	170.3	
MPT X WINDING	13.800										63.099	86.5	2660.6	
SUS 11 Primary	13.800										2.610	82.7	110.1	
SUS 11 Secondary	4.160										2.570	83.8	356.1	
SUS 12 Primary	13.800										3.111	87.5	131.2	
SUS 12 Secondary	0.480										2.987	90.5	3678.0	
SUS 21 PRIMARY	13.800										3.437	91.4	145.4	
SUS 21 SECONDARY	4.160										3.384	92.6	470.2	
SUS 22 PRIMARY	13.800										2.277	80.3	96.3	
SUS 22 SECONDARY	0.480										2.195	82.7	2700.0	

Project:		ETAP		Page:	13
Location:		20.6.0C		Date:	04-18-2023
Contract:				SN:	KIEWITRWN9
Engineer:				Revision:	Base
Filename:	GE-Southern	Study Case: LF NL NV		Config.:	Normal

Bus			Directly Connected Load								Total Bus Load			
			Constant kVA		Constant Z		Constant I		Generic					
ID	kV	Rated Amp	MW	Mvar	MW	Mvar	MW	Mvar	MW	Mvar	MVA	% PF	Amp	Percent Loading

* Indicates operating load of a bus exceeds the bus critical limit (100.0% of the Continuous Ampere rating).
\# Indicates operating load of a bus exceeds the bus marginal limit (98.0% of the Continuous Ampere rating).

Project:		ETAP		Page:	14
Location:		20.6.0C		Date:	04-18-2023
Contract:				SN:	KIEWITRWN9
Engineer:				Revision:	Base
Filename:	GE-Southern		Study Case: LF NL NV	Config.:	Normal

Branch Loading Summary Report

CKT / Branch		Busway / Cable & Reactor			Transformer				
		Ampacity	Loading		Capability	Loading (input)		Loading (output)	
ID	Type	(Amp)	Amp	%	(MVA)	MVA	%	MVA	%
6Z-CWS-MFN-01A-100	Cable	124.58	30.27	24.30					
6Z-CWS-MFN-01B-100	Cable	124.58	30.27	24.30					
6Z-CWS-MFN-01C-100	Cable	124.58	30.27	24.30					
6Z-CWS-MFN-01D-100	Cable	124.58	30.27	24.30					
6Z-CWS-MFN-01E-100	Cable	124.58	30.28	24.30					
6Z-CWS-MFN-01F-100	Cable	124.58	30.28	24.30					
6Z-CWS-MFN-01G-100	Cable	124.58	30.28	24.31					
6Z-CWS-MFN-01H-100	Cable	124.58	30.28	24.31					
6Z-CWS-MFN-01I-100	Cable	124.58	30.29	24.31					
6Z-CWS-MFN-01J-100	Cable	124.58	30.29	24.31					
6Z-CWS-MPM-01A-100	Cable	448.89	177.20	39.47					
6Z-CWS-MPM-01B-100	Cable	448.89	177.20	39.47					
6Z-CWS-MPM-02-100	Cable	124.58	54.27	43.56					
6Z-LVB-BUS-22	Cable	5043.36	2699.97	53.54					
6Z-LVB-MCC-121-200	Cable	1965.13	1317.26	67.03					
6Z-LVB-MCC-122-200	Cable	1965.13	1309.30	66.63					
6Z-LVB-MCC-123-200	Cable	1965.13	1094.61	55.70					
6Z-LVB-MCC-221-200	Cable	1943.66	1349.98	69.46					
6Z-LVB-MCC-222-200	Cable	1943.66	1349.98	69.46					
6Z-MVA-BUS-1	Cable	3294.23	2660.58	80.76					
6Z-MVA-BUS-12	Cable	5096.18	3678.01	72.17					
6Z-MVA-SWG-2-100	Cable	448.89	240.30	53.53					
6Z-MVA-SWG-21-100	Cable	1161.03	470.25	40.50					
6Z-MVC-SWG-11-100	Cable	1730.77	356.08	20.57					
6Z-SUS-XFR-11-100	Cable	514.72	110.09	21.39					
6Z-SUS-XFR-12-100	Cable	437.12	131.21	30.02					
6Z-SUS-XFR-21-100	Cable	448.89	145.39	32.39					
6Z-SUS-XFR-22-100	Cable	387.01	96.32	24.89					
DCC1 FEEDER	Cable	444.45	235.12	52.90					
DCC2 FEEDER	Cable	444.45	235.12	52.90					
Linde 1 Feeder	Cable	5147.16	1829.72	35.55					
6Z-MPT-XFR-1	Transformer				71.668	69.326	96.7	63.099	88.0
6Z-SUS-XFR-11	Transformer				8.750	2.610	29.8	2.570	29.4

Project:		ETAP		Page:	15
Location:		20.6.0C		Date:	04-18-2023
Contract:				SN:	KIEWITRWN9
Engineer:				Revision:	Base
Filename:	GE-Southern		Study Case: LF NL NV	Config.:	Normal

CKT / Branch		Busway / Cable & Reactor			Transformer				
						Loading (input)		Loading (output)	
ID	Type	Ampacity (Amp)	Loading Amp	%	Capability (MVA)	MVA	%	MVA	%
6Z-SUS-XFR-12	Transformer				3.333	3.111	93.3	2.987	89.6
6Z-SUS-XFR-21	Transformer				8.750	3.437	39.3	3.384	38.7
6Z-SUS-XFR-22	Transformer				3.333	2.277	68.3	2.195	65.9

* Indicates a branch with operating load exceeding the branch capability.

Project:		ETAP		Page:	16
Location:		20.6.0C		Date:	04-18-2023
Contract:				SN:	KIEWITRWN9
Engineer:				Revision:	Base
Filename:	GE-Southern		Study Case: LF NL NV	Config.:	Normal

Branch Losses Summary Report

Branch ID	From-To Bus Flow		To-From Bus Flow		Losses		% Bus Voltage		Vd % Drop
	MW	Mvar	MW	Mvar	kW	kvar	From	To	in Vmag
6Z-CWS-MFN-01A-100	0.179	0.125	-0.179	-0.125	0.3	0.2	100.2	104.0	0.16
6Z-CWS-MFN-01B-100	0.179	0.125	-0.179	-0.125	0.3	0.2	100.2	104.0	0.16
6Z-CWS-MFN-01C-100	0.179	0.125	-0.179	-0.125	0.3	0.2	100.2	104.0	0.17
6Z-CWS-MFN-01D-100	0.179	0.125	-0.179	-0.125	0.3	0.2	100.2	104.0	0.17
6Z-CWS-MFN-01E-100	0.179	0.125	-0.179	-0.125	0.3	0.2	100.2	104.0	0.18
6Z-CWS-MFN-01F-100	0.179	0.125	-0.179	-0.125	0.3	0.2	100.2	104.0	0.18
6Z-CWS-MFN-01G-100	0.179	0.125	-0.179	-0.125	0.3	0.3	100.2	104.0	0.19
6Z-CWS-MFN-01H-100	0.179	0.125	-0.179	-0.125	0.3	0.3	100.2	104.0	0.19
6Z-CWS-MFN-01I-100	0.179	0.125	-0.179	-0.125	0.4	0.3	100.2	103.9	0.22
6Z-CWS-MFN-01J-100	0.179	0.125	-0.179	-0.125	0.4	0.3	100.2	103.9	0.22
6Z-CWS-MPM-01A-100	3.909	1.540	-3.908	-1.536	1.6	3.7	99.2	103.6	0.07
6Z-CWS-MPM-01B-100	3.909	1.540	-3.908	-1.536	1.6	3.7	99.2	103.6	0.07
6Z-CWS-MPM-02-100	0.361	0.153	-0.360	-0.152	0.6	0.4	100.2	104.0	0.18
6Z-LVB-BUS-22	-1.813	-1.230	1.816	1.234	2.4	4.3	97.6	97.8	0.20
6Z-LVB-MCC-121-200	-0.916	-0.543	0.917	0.545	1.4	2.1	97.2	97.4	0.21
6Z-LVB-MCC-122-200	-0.910	-0.540	0.912	0.542	1.4	2.0	97.2	97.4	0.21
6Z-LVB-MCC-123-200	-0.868	-0.176	0.869	0.178	1.0	1.4	97.3	97.4	0.14
6Z-LVB-MCC-221-200	-0.905	-0.613	0.907	0.615	1.5	2.0	97.4	97.6	0.21
6Z-LVB-MCC-222-200	-0.905	-0.613	0.907	0.615	1.5	2.0	97.4	97.6	0.21
6Z-MPT-XFR-1	54.920	42.308	-54.560	-31.698	359.7	10609.9	102.2	99.2	2.98
6Z-MVA-BUS-1	-54.552	-31.683	54.560	31.698	7.9	14.4	99.2	99.2	0.02
6Z-MVA-BUS-12	-2.697	-1.265	2.702	1.274	4.3	8.7	97.4	97.7	0.25
6Z-MVA-SWG-2-100	4.976	2.775	-4.968	-2.754	8.7	20.5	99.2	98.9	0.31
6Z-MVA-SWG-21-100	-3.132	-1.281	3.132	1.281	0.3	0.4	99.9	99.9	0.01
6Z-MVC-SWG-11-100	-2.154	-1.401	2.155	1.401	0.2	0.4	100.2	100.2	0.01
6Z-SUS-XFR-11	2.159	1.467	-2.155	-1.401	4.8	65.5	99.2	100.2	0.97
6Z-SUS-XFR-11-100	2.159	1.467	-2.159	-1.467	0.1	0.1	99.2	99.2	0.00
6Z-SUS-XFR-12	2.723	1.504	-2.702	-1.274	21.6	230.2	99.2	97.7	1.51
6Z-SUS-XFR-12-100	2.723	1.504	-2.723	-1.504	0.1	0.2	99.2	99.2	0.01
6Z-SUS-XFR-21	3.140	1.396	-3.132	-1.281	8.4	114.3	98.9	99.9	0.98
6Z-SUS-XFR-21-100	3.141	1.396	-3.140	-1.396	0.1	0.3	98.9	98.9	0.01
6Z-SUS-XFR-22	1.827	1.358	-1.816	-1.234	11.6	124.0	98.9	97.8	1.09
6Z-SUS-XFR-22-100	1.827	1.358	-1.827	-1.358	0.1	0.1	98.9	98.9	0.01
DCC1 FEEDER	1.566	0.640	-1.564	-0.638	1.9	2.8	99.9	99.7	0.17

Project:		ETAP		Page:	17
Location:		20.6.0C		Date:	04-18-2023
Contract:				SN:	KIEWITRWN9
Engineer:				Revision:	Base
Filename:	GE-Southern		Study Case: LF NL NV	Config.:	Normal

Branch ID	From-To Bus Flow		To-From Bus Flow		Losses		% Bus Voltage		Vd % Drop
	MW	Mvar	MW	Mvar	kW	kvar	From	To	in Vmag
DCC2 FEEDER	1.566	0.640	-1.564	-0.638	1.9	2.8	99.9	99.7	0.17
Linde 1 Feeder	36.874	22.859	-36.867	-22.848	7.1	10.6	99.2	99.2	0.03
					454.7	11229.4			

* This Transmission Line includes Series Capacitor.

Project:		ETAP		Page:	18
Location:		20.6.0C		Date:	04-18-2023
Contract:				SN:	KIEWITRWN9
Engineer:				Revision:	Base
Filename:	GE-Southern		Study Case: LF NL NV	Config.:	Normal

Alert Summary Report

	% Alert Settings	
	Critical	Marginal
Loading		
Bus	100.0	98.0
Cable / Busway	100.0	98.0
Reactor	100.0	98.0
Line	100.0	98.0
Transformer	100.0	98.0
Panel	100.0	98.0
Protective Device	100.0	98.0
Generator	100.0	98.0
Inverter/Charger	100.0	98.0
Bus Voltage		
OverVoltage	105.0	102.0
UnderVoltage	95.0	98.0
Generator Excitation		
OverExcited (Q Max.)	100.0	95.0
UnderExcited (Q Min.)	100.0	

Marginal Report

Device ID	Type	Condition	Rating/Limit	Unit	Operating	% Operating	Phase Type
6Z-LVB-MCC-121	Bus	Under Voltage	0.480	kV	0.467	97.2	3-Phase
6Z-LVB-MCC-122	Bus	Under Voltage	0.480	kV	0.467	97.2	3-Phase
6Z-LVB-MCC-123	Bus	Under Voltage	0.480	kV	0.467	97.3	3-Phase
6Z-LVB-MCC-221	Bus	Under Voltage	0.480	kV	0.467	97.4	3-Phase
6Z-LVB-MCC-222	Bus	Under Voltage	0.480	kV	0.467	97.4	3-Phase
6Z-LVB-SWG-12	Bus	Under Voltage	0.480	kV	0.468	97.4	3-Phase
6Z-LVB-SWG-22	Bus	Under Voltage	0.480	kV	0.469	97.6	3-Phase
Bus18	Bus	Over Voltage	4.000	kV	4.160	104.0	3-Phase
Bus2	Bus	Over Voltage	4.000	kV	4.157	103.9	3-Phase
Bus20	Bus	Over Voltage	4.000	kV	4.160	104.0	3-Phase
Bus21	Bus	Over Voltage	4.000	kV	4.159	104.0	3-Phase
Bus22	Bus	Over Voltage	4.000	kV	4.159	104.0	3-Phase
Bus23	Bus	Over Voltage	4.000	kV	4.159	104.0	3-Phase
Bus24	Bus	Over Voltage	4.000	kV	4.158	104.0	3-Phase
Bus25	Bus	Over Voltage	4.000	kV	4.158	104.0	3-Phase

Project:		ETAP		Page:	19
Location:		20.6.0C		Date:	04-18-2023
Contract:				SN:	KIEWITRWN9
Engineer:				Revision:	Base
Filename:	GE-Southern	Study Case: LF NL NV		Config.:	Normal

Marginal Report

Device ID	Type	Condition	Rating/Limit	Unit	Operating	% Operating	Phase Type
Bus26	Bus	Over Voltage	4.000	kV	4.159	104.0	3-Phase
Bus28	Bus	Over Voltage	13.200	kV	13.680	103.6	3-Phase
Bus29	Bus	Over Voltage	4.000	kV	4.159	104.0	3-Phase
Bus43	Bus	Over Voltage	4.000	kV	4.157	103.9	3-Phase
Bus6	Bus	Over Voltage	13.200	kV	13.680	103.6	3-Phase
FIRE PUMP TAP BUS	Bus	Under Voltage	0.480	kV	0.468	97.4	3-Phase
HV BUS	Bus	Over Voltage	230.000	kV	235.060	102.2	3-Phase
SUS 12 Secondary	Bus	Under Voltage	0.480	kV	0.469	97.7	3-Phase
SUS 22 SECONDARY	Bus	Under Voltage	0.480	kV	0.469	97.8	3-Phase

SUMMARY OF TOTAL GENERATION, LOADING & DEMAND

	MW	Mvar	MVA	% PF
Source (Swing Buses):	54.920	42.308	69.326	79.22 Lagging
Source (Non-Swing Buses):	0.000	0.000	0.000	
Total Demand:	54.920	42.308	69.326	79.22 Lagging
Total Motor Load:	52.705	30.348	60.817	86.66 Lagging
Total Static Load:	1.760	0.730	1.906	92.36 Lagging
Total Constant I Load:	0.000	0.000	0.000	
Total Generic Load:	0.000	0.000	0.000	
Apparent Losses:	0.455	11.229		
System Mismatch:	0.000	0.000		

Number of Iterations: 3

Project:	ETAP	Page:	1
Location:	20.6.0C	Date:	04-18-2023
Contract:		SN:	KIEWITRWN9
Engineer:		Revision:	Base
Filename: GE-Southern	Study Case: LF NL LV	Config.:	Normal

Electrical Transient Analyzer Program

Load Flow Analysis

Loading Category (2): NORMAL

Generation Category (3): MINV

Load Diversity Factor: Bus Maximum

	Swing	V-Control	Load	Total
Number of Buses:	1	0	37	38

	XFMR2	XFMR3	Reactor	Line/Cable/ Busway	Impedance	Tie PD	Total
Number of Branches:	5	0	0	31	0	1	37

Method of Solution:	Adaptive Newton-Raphson Method
Maximum No. of Iteration:	99
Precision of Solution:	0.0001000
System Frequency:	60.00 Hz
Unit System:	English
Project Filename:	GE-Southern
Output Filename:	\\kiewitplaza\kegi\Data\ES\20041223-FOA2515_GE_Southern_Linde_Advanced_NGCC_Integration\ENG\Engineering\Elec_Controls\Calcs\ETAP\GE-Southern\LF-5.lfr

Project:		ETAP		Page:	2
Location:		20.6.0C		Date:	04-18-2023
Contract:				SN:	KIEWITRWN9
Engineer:				Revision:	Base
Filename:	GE-Southern		Study Case: LF NL LV	Config.:	Normal

Adjustments

Tolerance	Apply Adjustments	Individual /Global	Percent
Transformer Impedance:	Yes	Individual	
Reactor Impedance:	Yes	Individual	
Overload Heater Resistance:	No		
Transmission Line Length:	Yes	Individual	
Cable / Busway Length:	Yes	Individual	

Temperature Correction	Apply Adjustments	Individual /Global	Degree C
Transmission Line Resistance:	Yes	Individual	
Cable / Busway Resistance:	Yes	Individual	

Project:	**ETAP**	Page:	3
Location:	20.6.0C	Date:	04-18-2023
Contract:		SN:	KIEWITRWN9
Engineer:		Revision:	Base
Filename: GE-Southern	Study Case: LF NL LV	Config.:	Normal

Bus Input Data

Bus			Initial Voltage		Load							
					Constant kVA		Constant Z		Constant I		Generic	
ID	kV	Sub-sys	% Mag.	Ang.	MW	Mvar	MW	Mvar	MW	Mvar	MW	Mvar
6Z-LVB-MCC-121	0.480	1	100.0	0.0	0.616	0.365	0.317	0.188				
6Z-LVB-MCC-122	0.480	1	100.0	0.0	0.612	0.363	0.315	0.187				
6Z-LVB-MCC-123	0.480	1	100.0	0.0			0.917	0.186				
6Z-LVB-MCC-221	0.480	1	100.0	0.0	0.758	0.513	0.155	0.105				
6Z-LVB-MCC-222	0.480	1	100.0	0.0	0.758	0.513	0.155	0.105				
6Z-LVB-SWG-12	0.480	1	100.0	0.0								
6Z-LVB-SWG-22	0.480	1	100.0	0.0								
6Z-MVA-SWG-1	13.800	1	100.0	0.0								
6Z-MVA-SWG-2	13.800	1	100.0	0.0								
6Z-MVC-SWG-11	4.160	1	100.0	0.0								
6Z-MVC-SWG-21	4.160	1	100.0	0.0								
Bus2	4.000	1	100.0	0.0	0.179	0.125						
Bus6	13.200	1	100.0	0.0	3.908	1.536						
Bus7	13.800	1	100.0	0.0	36.867	22.848						
Bus8	4.160	1	100.0	0.0	1.564	0.638						
Bus9	4.160	1	100.0	0.0	1.564	0.638						
Bus18	4.000	1	100.0	0.0	0.179	0.125						
Bus20	4.000	1	100.0	0.0	0.179	0.125						
Bus21	4.000	1	100.0	0.0	0.179	0.125						
Bus22	4.000	1	100.0	0.0	0.179	0.125						
Bus23	4.000	1	100.0	0.0	0.179	0.125						
Bus24	4.000	1	100.0	0.0	0.179	0.125						
Bus25	4.000	1	100.0	0.0	0.179	0.125						
Bus26	4.000	1	100.0	0.0	0.179	0.125						
Bus28	13.200	1	100.0	0.0	3.908	1.536						
Bus29	4.000	1	100.0	0.0	0.360	0.152						
Bus43	4.000	1	100.0	0.0	0.179	0.125						
FIRE PUMP TAP BUS	0.480	1	100.0	0.0								
HV BUS	230.000	1	100.0	0.0								
MPT X WINDING	13.800	1	100.0	0.0								
SUS 11 Primary	13.800	1	100.0	0.0								
SUS 11 Secondary	4.160	1	100.0	0.0								
SUS 12 Primary	13.800	1	100.0	0.0								

Project:	**ETAP**	Page:	4
Location:	20.6.0C	Date:	04-18-2023
Contract:		SN:	KIEWITRWN9
Engineer:		Revision:	Base
Filename: GE-Southern	Study Case: LF NL LV	Config.:	Normal

Bus			Initial Voltage		Load							
					Constant kVA		Constant Z		Constant I		Generic	
ID	kV	Sub-sys	% Mag.	Ang.	MW	Mvar	MW	Mvar	MW	Mvar	MW	Mvar
SUS 12 Secondary	0.480	1	100.0	0.0								
SUS 21 PRIMARY	13.800	1	100.0	0.0								
SUS 21 SECONDARY	4.160	1	100.0	0.0								
SUS 22 PRIMARY	13.800	1	100.0	0.0								
SUS 22 SECONDARY	0.480	1	100.0	0.0								
Total Number of Buses: 38					52.705	30.348	1.860	0.772	0.000	0.000	0.000	0.000

Generation Bus				Voltage		Generation			Mvar Limits	
ID	kV	Type	Sub-sys	% Mag.	Angle	MW	Mvar	% PF	Max	Min
HV BUS	230.000	Swing	1	100.0	0.0					
						0.000	0.000			

Project:		ETAP		Page:	5
Location:		20.6.0C		Date:	04-18-2023
Contract:				SN:	KIEWITRWN9
Engineer:				Revision:	Base
Filename:	GE-Southern	Study Case: LF NL LV		Config.:	Normal

Line/Cable/Busway Input Data

ohms or siemens/1000 ft per Conductor (Cable) or per Phase (Line/Busway)

Line/Cable/Busway			Length						
ID	Library	Size	Adj. (ft)	% Tol.	#/Phase	T (°C)	R	X	Y
6Z-CWS-MFN-01A-100	5.0NCUS1	1/0	800.0	0.0	1	75	0.127806	0.098000	
6Z-CWS-MFN-01B-100	5.0NCUS1	1/0	800.0	0.0	1	75	0.127806	0.098000	
6Z-CWS-MFN-01C-100	5.0NCUS1	1/0	850.0	0.0	1	75	0.127806	0.098000	
6Z-CWS-MFN-01D-100	5.0NCUS1	1/0	850.0	0.0	1	75	0.127806	0.098000	
6Z-CWS-MFN-01E-100	5.0NCUS1	1/0	900.0	0.0	1	75	0.127806	0.098000	
6Z-CWS-MFN-01F-100	5.0NCUS1	1/0	900.0	0.0	1	75	0.127806	0.098000	
6Z-CWS-MFN-01G-100	5.0NCUS1	1/0	950.0	0.0	1	75	0.127806	0.098000	
6Z-CWS-MFN-01H-100	5.0NCUS1	1/0	950.0	0.0	1	75	0.127806	0.098000	
6Z-CWS-MFN-01I-100	5.0NCUS1	1/0	1100.0	0.0	1	75	0.127806	0.098000	
6Z-CWS-MFN-01J-100	5.0NCUS1	1/0	1100.0	0.0	1	75	0.127806	0.098000	
6Z-CWS-MPM-01A-100	15NCUS1	500	500.0	0.0	1	75	0.033382	0.079000	
6Z-CWS-MPM-01B-100	15NCUS1	500	500.0	0.0	1	75	0.033382	0.079000	
6Z-CWS-MPM-02-100	5.0NCUS1	1/0	500.0	0.0	1	75	0.127806	0.098000	
6Z-LVB-BUS-22	0.6NCUN1	750	50.0	0.0	9	75	0.019400	0.035600	
6Z-LVB-MCC-121-200	0.6NCUN1	500	50.0	0.0	5	75	0.027000	0.039600	
6Z-LVB-MCC-122-200	0.6NCUN1	500	50.0	0.0	5	75	0.027000	0.039600	
6Z-LVB-MCC-123-200	0.6NCUN1	500	50.0	0.0	5	75	0.027000	0.039600	
6Z-LVB-MCC-221-200	0.6NCUN1	500	50.0	0.0	5	75	0.027600	0.037300	
6Z-LVB-MCC-222-200	0.6NCUN1	500	50.0	0.0	5	75	0.027600	0.037300	
6Z-MVA-BUS-1	15NCUN1	750	100.0	0.0	5	75	0.018503	0.034000	
6Z-MVA-BUS-12	0.6NCUN1	750	50.0	0.0	9	75	0.019000	0.038400	
6Z-MVA-SWG-2-100	15NCUS1	500	1500.0	0.0	1	75	0.033382	0.079000	
6Z-MVA-SWG-21-100	5.0NCUS3	500	50.0	0.0	3	75	0.028400	0.035100	
6Z-MVC-SWG-11-100	5.0NCUS1	500	50.0	0.0	3	75	0.026222	0.061417	
6Z-SUS-XFR-11-100	15NCUS1	500	50.0	0.0	1	75	0.028400	0.042100	
6Z-SUS-XFR-12-100	5.0NCUS1	350	50.0	0.0	1	75	0.037095	0.063246	
6Z-SUS-XFR-21-100	15NCUS1	500	50.0	0.0	1	75	0.033382	0.079000	
6Z-SUS-XFR-22-100	5.0NCUS3	500	100.0	0.0	1	75	0.028400	0.035100	
DCC1 FEEDER	5.0NCUS1	500	400.0	0.0	1	75	0.028400	0.042100	
DCC2 FEEDER	5.0NCUS1	500	400.0	0.0	1	75	0.028400	0.042100	
Linde 1 Feeder	15NCUS1	500	250.0	0.0	10	75	0.028400	0.042100	

Line / Cable / Busway resistances are listed at the specified temperatures.

Project:	ETAP	Page:	6
Location:	20.6.0C	Date:	04-18-2023
Contract:		SN:	KIEWITRWN9
Engineer:		Revision:	Base
Filename: GE-Southern	Study Case: LF NL LV	Config.:	Normal

2-Winding Transformer Input Data

Transformer		Rating					Z Variation			% Tap Setting		Adjusted	Phase Shift	
ID	Phase	MVA	Prim. kV	Sec. kV	% Z1	X1/R1	+ 5%	- 5%	% Tol.	Prim.	Sec.	% Z	Type	Angle
6Z-MPT-XFR-1	3-Phase	43.000	230.000	13.800	10.50	29.50	0	0	7.5	0	0	11.2875	Dyn	0.000
6Z-SUS-XFR-11	3-Phase	7.000	13.800	4.160	6.50	13.55	0	0	7.5	-2.500	0	6.9875	Dyn	0.000
6Z-SUS-XFR-12	3-Phase	2.500	13.800	0.480	5.75	10.67	0	0	7.5	-2.500	0	6.1813	Dyn	0.000
6Z-SUS-XFR-21	3-Phase	7.000	13.800	4.160	6.50	13.55	0	0	7.5	-2.500	0	6.9875	Dyn	0.000
6Z-SUS-XFR-22	3-Phase	2.500	13.800	0.480	5.75	10.67	0	0	7.5	-2.500	0	6.1813	Dyn	0.000

2-Winding Transformer Load Tap Changer (LTC) Settings

Transformer	Connected Buses ("*" LTC Side)		Transformer Load Tap Changer Setting					
ID	Primary Bus ID	Secondary Bus ID	% Min. Tap	% Max. Tap	% Step	Regulated Bus ID	% V	kV
6Z-MPT-XFR-1	* IIV BUS	MPT X WINDING	-10.00	10.00	0.625	MPT X WINDING	100.00	13.800

Project:	ETAP	Page:	7
Location:	20.6.0C	Date:	04-18-2023
Contract:		SN:	KIEWITRWN9
Engineer:		Revision:	Base
Filename: GE-Southern	Study Case: LF NL LV	Config.:	Normal

Branch Connections

CKT/Branch		Connected Bus ID		% Impedance, Pos. Seq., 100 MVA Base			
ID	Type	From Bus	To Bus	R	X	Z	Y
6Z-MPT-XFR-1	2W XFMR	HV BUS	MPT X WINDING	0.89	26.23	26.25	
6Z-SUS-XFR-11	2W XFMR	SUS 11 Primary	SUS 11 Secondary	7.16	97.06	97.33	
6Z-SUS-XFR-12	2W XFMR	SUS 12 Primary	SUS 12 Secondary	22.49	240.02	241.07	
6Z-SUS-XFR-21	2W XFMR	SUS 21 PRIMARY	SUS 21 SECONDARY	7.16	97.06	97.33	
6Z-SUS-XFR-22	2W XFMR	SUS 22 PRIMARY	SUS 22 SECONDARY	22.49	240.02	241.07	
6Z-CWS-MFN-01A-100	Cable	6Z-MVC-SWG-11	Bus18	59.08	45.30	74.45	
6Z-CWS-MFN-01B-100	Cable	6Z-MVC-SWG-11	Bus20	59.08	45.30	74.45	
6Z-CWS-MFN-01C-100	Cable	6Z-MVC-SWG-11	Bus21	62.77	48.13	79.10	
6Z-CWS-MFN-01D-100	Cable	6Z-MVC-SWG-11	Bus26	62.77	48.13	79.10	
6Z-CWS-MFN-01E-100	Cable	6Z-MVC-SWG-11	Bus22	66.47	50.97	83.76	
6Z-CWS-MFN-01F-100	Cable	6Z-MVC-SWG-11	Bus23	66.47	50.97	83.76	
6Z-CWS-MFN-01G-100	Cable	6Z-MVC-SWG-11	Bus24	70.16	53.80	88.41	
6Z-CWS-MFN-01H-100	Cable	6Z-MVC-SWG-11	Bus25	70.16	53.80	88.41	
6Z-CWS-MFN-01I-100	Cable	6Z-MVC-SWG-11	Bus43	81.24	62.29	102.37	
6Z-CWS-MFN-01J-100	Cable	6Z-MVC-SWG-11	Bus2	81.24	62.29	102.37	
6Z-CWS-MPM-01A-100	Cable	6Z-MVA-SWG-1	Bus6	0.88	2.07	2.25	
6Z-CWS-MPM-01B-100	Cable	6Z-MVA-SWG-1	Bus28	0.88	2.07	2.25	
6Z-CWS-MPM-02-100	Cable	6Z-MVC-SWG-11	Bus29	36.93	28.31	46.53	
6Z-LVB-BUS-22	Cable	SUS 22 SECONDARY	6Z-LVB-SWG-22	4.68	8.58	9.78	
6Z-LVB-MCC-121-200	Cable	6Z-LVB-SWG-12	6Z-LVB-MCC-121	11.72	17.19	20.80	
6Z-LVB-MCC-122-200	Cable	6Z-LVB-SWG-12	6Z-LVB-MCC-122	11.72	17.19	20.80	
6Z-LVB-MCC-123-200	Cable	6Z-LVB-SWG-12	6Z-LVB-MCC-123	11.72	17.19	20.80	
6Z-LVB-MCC-221-200	Cable	6Z-LVB-SWG-22	6Z-LVB-MCC-221	11.98	16.19	20.14	
6Z-LVB-MCC-222-200	Cable	6Z-LVB-SWG-22	6Z-LVB-MCC-222	11.98	16.19	20.14	
6Z-MVA-BUS-1	Cable	MPT X WINDING	6Z-MVA-SWG-1	0.02	0.04	0.04	
6Z-MVA-BUS-12	Cable	SUS 12 Secondary	FIRE PUMP TAP BUS	4.58	9.26	10.33	
6Z-MVA-SWG-2-100	Cable	6Z-MVA-SWG-1	6Z-MVA-SWG-2	2.63	6.22	6.76	
6Z-MVA-SWG-21-100	Cable	SUS 21 SECONDARY	6Z-MVC-SWG-21	0.27	0.34	0.43	
6Z-MVC-SWG-11-100	Cable	SUS 11 Secondary	6Z-MVC-SWG-11	0.25	0.59	0.64	
6Z-SUS-XFR-11-100	Cable	6Z-MVA-SWG-1	SUS 11 Primary	0.07	0.11	0.13	
6Z-SUS-XFR-12-100	Cable	6Z-MVA-SWG-1	SUS 12 Primary	0.10	0.17	0.19	
6Z-SUS-XFR-21-100	Cable	6Z-MVA-SWG-2	SUS 21 PRIMARY	0.09	0.21	0.23	
6Z-SUS-XFR-22-100	Cable	6Z-MVA-SWG-2	SUS 22 PRIMARY	0.15	0.18	0.24	
DCC1 FEEDER	Cable	6Z-MVC-SWG-21	Bus8	6.56	9.73	11.74	
DCC2 FEEDER	Cable	6Z-MVC-SWG-21	Bus9	6.56	9.73	11.74	
Linde 1 Feeder	Cable	6Z-MVA-SWG-1	Bus7	0.04	0.06	0.07	

Project:		ETAP		Page:	8
Location:		20.6.0C		Date:	04-18-2023
Contract:				SN:	KIEWITRWN9
Engineer:				Revision:	Base
Filename:	GE-Southern		Study Case: LF NL LV	Config.:	Normal

CKT/Branch		Connected Bus ID		% Impedance, Pos. Seq., 100 MVA Base			
ID	Type	From Bus	To Bus	R	X	Z	Y
CB12	Tie Breakr	FIRE PUMP TAP BUS	6Z-LVB-SWG-12				

Project:	ETAP	Page:	9
Location:	20.6.0C	Date:	04-18-2023
Contract:		SN:	KIEWITRWN9
Engineer:		Revision:	Base
Filename: GE-Southern	Study Case: LF NL LV	Config.:	Normal

LOAD FLOW REPORT

Bus		Voltage		Generation		Load		Load Flow					XFMR
ID	kV	% Mag.	Ang.	MW	Mvar	MW	Mvar	ID	MW	Mvar	Amp	%PF	%Tap
6Z-LVB-MCC-121	0.480	97.030	-11.3	0.000	0.000	0.915	0.543	6Z-LVB-SWG-12	-0.915	-0.543	1318.2	86.0	
6Z-LVB-MCC-122	0.480	97.032	-11.3	0.000	0.000	0.909	0.539	6Z-LVB-SWG-12	-0.909	-0.539	1310.2	86.0	
6Z-LVB-MCC-123	0.480	97.101	-11.4	0.000	0.000	0.864	0.175	6Z-LVB-SWG-12	-0.864	-0.175	1092.4	98.0	
6Z-LVB-MCC-221	0.480	97.188	-10.2	0.000	0.000	0.904	0.613	6Z-LVB-SWG-22	-0.904	-0.613	1351.9	82.8	
6Z-LVB-MCC-222	0.480	97.188	-10.2	0.000	0.000	0.904	0.613	6Z-LVB-SWG-22	-0.904	-0.613	1351.9	82.8	
6Z-LVB-SWG-12	0.480	97.237	-11.3	0.000	0.000	0.000	0.000	6Z-LVB-MCC-121	0.916	0.545	1318.2	85.9	
								6Z-LVB-MCC-122	0.910	0.541	1310.2	85.9	
								6Z-LVB-MCC-123	0.865	0.177	1092.4	98.0	
								FIRE PUMP TAP BUS	-2.691	-1.263	3677.7	90.5	
6Z-LVB-SWG-22	0.480	97.402	-10.1	0.000	0.000	0.000	0.000	SUS 22 SECONDARY	-1.812	-1.229	2703.8	82.8	
								6Z-LVB-MCC-221	0.906	0.615	1351.9	82.8	
								6Z-LVB-MCC-222	0.906	0.615	1351.9	82.8	
6Z-MVA-SWG-1	13.800	99.009	-7.5	0.000	0.000	0.000	0.000	Bus6	3.909	1.540	177.5	93.0	
								Bus28	3.909	1.540	177.5	93.0	
								MPT X WINDING	-54.545	-31.681	2665.4	86.5	
								6Z-MVA-SWG-2	4.975	2.775	240.7	87.3	
								SUS 11 Primary	2.159	1.467	110.3	82.7	
								SUS 12 Primary	2.717	1.502	131.2	87.5	
								Bus7	36.874	22.859	1833.3	85.0	
6Z-MVA-SWG-2	13.800	98.703	-7.6	0.000	0.000	0.000	0.000	6Z-MVA-SWG-1	-4.967	-2.754	240.7	87.5	
								SUS 21 PRIMARY	3.141	1.396	145.7	91.4	
								SUS 22 PRIMARY	1.826	1.358	96.5	80.2	
6Z-MVC-SWG-11	4.160	99.956	-8.6	0.000	0.000	0.000	0.000	Bus18	0.179	0.125	30.3	82.1	
								Bus20	0.179	0.125	30.3	82.1	
								Bus21	0.179	0.125	30.3	82.1	
								Bus26	0.179	0.125	30.3	82.1	
								Bus22	0.179	0.125	30.3	82.1	
								Bus23	0.179	0.125	30.3	82.1	
								Bus24	0.179	0.125	30.3	82.1	
								Bus25	0.179	0.125	30.3	82.1	
								Bus43	0.179	0.125	30.4	82.1	

Project:		ETAP		Page:	10
Location:		20.6.0C		Date:	04-18-2023
Contract:				SN:	KIEWITRWN9
Engineer:				Revision:	Base
Filename:	GE-Southern		Study Case: LF NL LV	Config.:	Normal

Bus		Voltage		Generation		Load		Load Flow					XFMR
ID	kV	% Mag.	Ang.	MW	Mvar	MW	Mvar	ID	MW	Mvar	Amp	%PF	%Tap
								Bus2	0.179	0.125	30.4	82.1	
								Bus29	0.361	0.153	54.4	92.1	
								SUS 11 Secondary	-2.154	-1.401	356.8	83.8	
6Z-MVC-SWG-21	4.160	99.659	-9.4	0.000	0.000	0.000	0.000	SUS 21 SECONDARY	-3.132	-1.281	471.2	92.6	
								Bus8	1.566	0.640	235.6	92.6	
								Bus9	1.566	0.640	235.6	92.6	
Bus2	4.000	103.722	-8.7	0.000	0.000	0.179	0.125	6Z-MVC-SWG-11	-0.179	-0.125	30.4	82.1	
Bus6	13.200	103.439	-7.5	0.000	0.000	3.908	1.536	6Z-MVA-SWG-1	-3.908	-1.536	177.5	93.1	
Bus7	13.800	98.982	-7.5	0.000	0.000	36.867	22.848	6Z-MVA-SWG-1	-36.867	-22.848	1833.3	85.0	
Bus8	4.160	99.493	-9.4	0.000	0.000	1.564	0.638	6Z-MVC-SWG-21	-1.564	-0.638	235.6	92.6	
Bus9	4.160	99.493	-9.4	0.000	0.000	1.564	0.638	6Z-MVC-SWG-21	-1.564	-0.638	235.6	92.6	
Bus18	4.000	103.786	-8.6	0.000	0.000	0.179	0.125	6Z-MVC-SWG-11	-0.179	-0.125	30.3	82.1	
Bus20	4.000	103.786	-8.6	0.000	0.000	0.179	0.125	6Z-MVC-SWG-11	-0.179	-0.125	30.3	82.1	
Bus21	4.000	103.775	-8.7	0.000	0.000	0.179	0.125	6Z-MVC-SWG-11	-0.179	-0.125	30.3	82.1	
Bus22	4.000	103.764	-8.7	0.000	0.000	0.179	0.125	6Z-MVC-SWG-11	-0.179	-0.125	30.3	82.1	
Bus23	4.000	103.764	-8.7	0.000	0.000	0.179	0.125	6Z-MVC-SWG-11	-0.179	-0.125	30.3	82.1	
Bus24	4.000	103.754	-8.7	0.000	0.000	0.179	0.125	6Z-MVC-SWG-11	-0.179	-0.125	30.3	82.1	
Bus25	4.000	103.754	-8.7	0.000	0.000	0.179	0.125	6Z-MVC-SWG-11	-0.179	-0.125	30.3	82.1	
Bus26	4.000	103.775	-8.7	0.000	0.000	0.179	0.125	6Z-MVC-SWG-11	-0.179	-0.125	30.3	82.1	
Bus28	13.200	103.439	-7.5	0.000	0.000	3.908	1.536	6Z-MVA-SWG-1	-3.908	-1.536	177.5	93.1	
Bus29	4.000	103.771	-8.7	0.000	0.000	0.360	0.152	6Z-MVC-SWG-11	-0.360	-0.152	54.4	92.1	
Bus43	4.000	103.722	-8.7	0.000	0.000	0.179	0.125	6Z-MVC-SWG-11	-0.179	-0.125	30.4	82.1	
FIRE PUMP TAP BUS	0.480	97.237	-11.3	0.000	0.000	0.000	0.000	SUS 12 Secondary	-2.691	-1.263	3677.7	90.5	
								6Z-LVB-SWG-12	2.691	1.263	3677.7	90.5	
* IIV BUS	230.000	100.000	0.0	54.914	42.345	0.000	0.000	MPT X WINDING	54.914	42.345	174.1	79.2	-8.125
MPT X WINDING	13.800	99.031	-7.5	0.000	0.000	0.000	0.000	6Z-MVA-SWG-1	54.553	31.696	2665.4	86.5	
								IIV BUS	-54.553	-31.696	2665.4	86.5	
SUS 11 Primary	13.800	99.005	-7.5	0.000	0.000	0.000	0.000	6Z-MVA-SWG-1	-2.159	-1.467	110.3	82.7	
								SUS 11 Secondary	2.159	1.467	110.3	82.7	-2.500
SUS 11 Secondary	4.160	99.970	-8.6	0.000	0.000	0.000	0.000	6Z-MVC-SWG-11	2.155	1.401	356.8	83.8	
								SUS 11 Primary	-2.155	-1.401	356.8	83.8	
SUS 12 Primary	13.800	99.004	-7.5	0.000	0.000	0.000	0.000	6Z-MVA-SWG-1	-2.717	-1.502	131.2	87.5	
								SUS 12 Secondary	2.717	1.502	131.2	87.5	-2.500

Project:	ETAP	Page:	11
Location:	20.6.0C	Date:	04-18-2023
Contract:		SN:	KIEWITRWN9
Engineer:	Study Case: LF NL LV	Revision:	Base
Filename: GE-Southern		Config.:	Normal

Bus		Voltage		Generation		Load		Load Flow					XFMR
ID	kV	% Mag.	Ang.	MW	Mvar	MW	Mvar	ID	MW	Mvar	Amp	%PF	%Tap
SUS 12 Secondary	0.480	97.484	-11.2	0.000	0.000	0.000	0.000	FIRE PUMP TAP BUS	2.696	1.272	3677.7	90.4	
								SUS 12 Primary	-2.696	-1.272	3677.7	90.4	
SUS 21 PRIMARY	13.800	98.697	-7.6	0.000	0.000	0.000	0.000	6Z-MVA-SWG-2	-3.141	-1.396	145.7	91.4	
								SUS 21 SECONDARY	3.141	1.396	145.7	91.4	-2.500
SUS 21 SECONDARY	4.160	99.671	-9.3	0.000	0.000	0.000	0.000	6Z-MVC-SWG-21	3.132	1.281	471.2	92.6	
								SUS 21 PRIMARY	-3.132	-1.281	471.2	92.6	
SUS 22 PRIMARY	13.800	98.697	-7.6	0.000	0.000	0.000	0.000	6Z-MVA-SWG-2	-1.826	-1.358	96.5	80.2	
								SUS 22 SECONDARY	1.826	1.358	96.5	80.2	-2.500
SUS 22 SECONDARY	0.480	97.597	-10.1	0.000	0.000	0.000	0.000	6Z-LVB-SWG-22	1.814	1.233	2703.8	82.7	
								SUS 22 PRIMARY	-1.814	-1.233	2703.8	82.7	

* Indicates a voltage regulated bus (voltage controlled or swing type machine connected to it)

# Indicates a bus with a load mismatch of more than 0.1 MVA

Project:	ETAP	Page:	12
Location:	20.6.0C	Date:	04-18-2023
Contract:		SN:	KIEWITRWN9
Engineer:		Revision:	Base
Filename: GE-Southern	Study Case: LF NL LV	Config.:	Normal

Bus Loading Summary Report

Bus			Directly Connected Load								Total Bus Load			
			Constant kVA		Constant Z		Constant I		Generic					Percent
ID	kV	Rated Amp	MW	Mvar	MW	Mvar	MW	Mvar	MW	Mvar	MVA	% PF	Amp	Loading
6Z-LVB-MCC-121	0.480	1600.0	0.616	0.365	0.299	0.177					1.063	86.0	1318.2	82.4
6Z-LVB-MCC-122	0.480	1600.0	0.612	0.363	0.297	0.176					1.057	86.0	1310.2	81.9
6Z-LVB-MCC-123	0.480	1600.0			0.864	0.175					0.882	98.0	1092.4	68.3
6Z-LVB-MCC-221	0.480	1600.0	0.758	0.513	0.147	0.099					1.092	82.8	1351.9	84.5
6Z-LVB-MCC-222	0.480	1600.0	0.758	0.513	0.147	0.099					1.092	82.8	1351.9	84.5
6Z-LVB-SWG-12	0.480	4000.0									2.973	90.5	3677.7	91.9
6Z-LVB-SWG-22	0.480	4000.0									2.189	82.8	2703.8	67.6
6Z-MVA-SWG-1	13.800	3000.0									63.078	86.5	2665.4	88.8
6Z-MVA-SWG-2	13.800	1200.0									5.679	87.5	240.7	20.1
6Z-MVC-SWG-11	4.160	1200.0									2.570	83.8	356.8	29.7
6Z-MVC-SWG-21	4.160	1200.0									3.384	92.6	471.2	39.3
Bus2	4.000		0.179	0.125							0.218	82.1	30.4	
Bus6	13.200		3.908	1.536							4.199	93.1	177.5	
Bus7	13.800		36.867	22.848							43.373	85.0	1833.3	
Bus8	4.160		1.564	0.638							1.689	92.6	235.6	
Bus9	4.160		1.564	0.638							1.689	92.6	235.6	
Bus18	4.000		0.179	0.125							0.218	82.1	30.3	
Bus20	4.000		0.179	0.125							0.218	82.1	30.3	
Bus21	4.000		0.179	0.125							0.218	82.1	30.3	
Bus22	4.000		0.179	0.125							0.218	82.1	30.3	
Bus23	4.000		0.179	0.125							0.218	82.1	30.3	
Bus24	4.000		0.179	0.125							0.218	82.1	30.3	
Bus25	4.000		0.179	0.125							0.218	82.1	30.3	
Bus26	4.000		0.179	0.125							0.218	82.1	30.3	
Bus28	13.200		3.908	1.536							4.199	93.1	177.5	
Bus29	4.000		0.360	0.152							0.391	92.1	54.4	
Bus43	4.000		0.179	0.125							0.218	82.1	30.4	
FIRE PUMP TAP BUS	0.480										2.973	90.5	3677.7	
HV BUS	230.000										69.344	79.2	174.1	
MPT X WINDING	13.800										63.092	86.5	2665.4	
SUS 11 Primary	13.800										2.611	82.7	110.3	
SUS 11 Secondary	4.160										2.570	83.8	356.8	
SUS 12 Primary	13.800										3.105	87.5	131.2	
SUS 12 Secondary	0.480										2.981	90.4	3677.7	
SUS 21 PRIMARY	13.800										3.437	91.4	145.7	
SUS 21 SECONDARY	4.160										3.384	92.6	471.2	
SUS 22 PRIMARY	13.800										2.275	80.2	96.5	
SUS 22 SECONDARY	0.480										2.194	82.7	2703.8	

Project:		ETAP		Page:	13
Location:		20.6.0C		Date:	04-18-2023
Contract:				SN:	KIEWITRWN9
Engineer:				Revision:	Base
Filename:	GE-Southern		Study Case: LF NL LV	Config.:	Normal

Bus			Directly Connected Load								Total Bus Load			
			Constant kVA		Constant Z		Constant I		Generic					
ID	kV	Rated Amp	MW	Mvar	MW	Mvar	MW	Mvar	MW	Mvar	MVA	% PF	Amp	Percent Loading

* Indicates operating load of a bus exceeds the bus critical limit (100.0% of the Continuous Ampere rating).
\# Indicates operating load of a bus exceeds the bus marginal limit (98.0% of the Continuous Ampere rating).

Project:		ETAP		Page:	14
Location:		20.6.0C		Date:	04-18-2023
Contract:				SN:	KIEWITRWN9
Engineer:				Revision:	Base
Filename:	GE-Southern		Study Case: LF NL LV	Config.:	Normal

Branch Loading Summary Report

CKT / Branch		Busway / Cable & Reactor			Transformer				
		Ampacity	Loading		Capability	Loading (input)		Loading (output)	
ID	Type	(Amp)	Amp	%	(MVA)	MVA	%	MVA	%
6Z-CWS-MFN-01A-100	Cable	124.58	30.33	24.35					
6Z-CWS-MFN-01B-100	Cable	124.58	30.33	24.35					
6Z-CWS-MFN-01C-100	Cable	124.58	30.34	24.35					
6Z-CWS-MFN-01D-100	Cable	124.58	30.34	24.35					
6Z-CWS-MFN-01E-100	Cable	124.58	30.34	24.35					
6Z-CWS-MFN-01F-100	Cable	124.58	30.34	24.35					
6Z-CWS-MFN-01G-100	Cable	124.58	30.34	24.35					
6Z-CWS-MFN-01H-100	Cable	124.58	30.34	24.35					
6Z-CWS-MFN-01I-100	Cable	124.58	30.35	24.36					
6Z-CWS-MFN-01J-100	Cable	124.58	30.35	24.36					
6Z-CWS-MPM-01A-100	Cable	448.89	177.54	39.55					
6Z-CWS-MPM-01B-100	Cable	448.89	177.54	39.55					
6Z-CWS-MPM-02-100	Cable	124.58	54.38	43.65					
6Z-LVB-BUS-22	Cable	5043.36	2703.77	53.61					
6Z-LVB-MCC-121-200	Cable	1965.13	1318.18	67.08					
6Z-LVB-MCC-122-200	Cable	1965.13	1310.22	66.67					
6Z-LVB-MCC-123-200	Cable	1965.13	1092.39	55.59					
6Z-LVB-MCC-221-200	Cable	1943.66	1351.88	69.55					
6Z-LVB-MCC-222-200	Cable	1943.66	1351.88	69.55					
6Z-MVA-BUS-1	Cable	3294.23	2665.43	80.91					
6Z-MVA-BUS-12	Cable	5096.18	3677.70	72.17					
6Z-MVA-SWG-2-100	Cable	448.89	240.72	53.63					
6Z-MVA-SWG-21-100	Cable	1161.03	471.20	40.58					
6Z-MVC-SWG-11-100	Cable	1730.77	356.79	20.61					
6Z-SUS-XFR-11-100	Cable	514.72	110.31	21.43					
6Z-SUS-XFR-12-100	Cable	437.12	131.20	30.01					
6Z-SUS-XFR-21-100	Cable	448.89	145.68	32.45					
6Z-SUS-XFR-22-100	Cable	387.01	96.46	24.92					
DCC1 FEEDER	Cable	444.45	235.60	53.01					
DCC2 FEEDER	Cable	444.45	235.60	53.01					
Linde 1 Feeder	Cable	5147.16	1833.26	35.62					
6Z-MPT-XFR-1	Transformer				71.668	69.344	96.8	63.092	88.0
6Z-SUS-XFR-11	Transformer				8.750	2.610	29.8	2.570	29.4

Project:		ETAP		Page:	15
Location:		20.6.0C		Date:	04-18-2023
Contract:				SN:	KIEWITRWN9
Engineer:				Revision:	Base
Filename:	GE-Southern		Study Case: LF NL LV	Config.:	Normal

CKT / Branch		Busway / Cable & Reactor			Transformer				
						Loading (input)		Loading (output)	
ID	Type	Ampacity (Amp)	Loading Amp	%	Capability (MVA)	MVA	%	MVA	%
6Z-SUS-XFR-12	Transformer				3.333	3.105	93.2	2.981	89.4
6Z-SUS-XFR-21	Transformer				8.750	3.437	39.3	3.384	38.7
6Z-SUS-XFR-22	Transformer				3.333	2.275	68.3	2.194	65.8

* Indicates a branch with operating load exceeding the branch capability.

Project:		ETAP		Page:	16
Location:		20.6.0C		Date:	04-18-2023
Contract:				SN:	KIEWITRWN9
Engineer:				Revision:	Base
Filename:	GE-Southern		Study Case: LF NL LV	Config.:	Normal

Branch Losses Summary Report

Branch ID	From-To Bus Flow		To-From Bus Flow		Losses		% Bus Voltage		Vd % Drop
	MW	Mvar	MW	Mvar	kW	kvar	From	To	in Vmag
6Z-CWS-MFN-01A-100	0.179	0.125	-0.179	-0.125	0.3	0.2	100.0	103.8	0.16
6Z-CWS-MFN-01B-100	0.179	0.125	-0.179	-0.125	0.3	0.2	100.0	103.8	0.16
6Z-CWS-MFN-01C-100	0.179	0.125	-0.179	-0.125	0.3	0.2	100.0	103.8	0.17
6Z-CWS-MFN-01D-100	0.179	0.125	-0.179	-0.125	0.3	0.2	100.0	103.8	0.17
6Z-CWS-MFN-01E-100	0.179	0.125	-0.179	-0.125	0.3	0.2	100.0	103.8	0.18
6Z-CWS-MFN-01F-100	0.179	0.125	-0.179	-0.125	0.3	0.2	100.0	103.8	0.18
6Z-CWS-MFN-01G-100	0.179	0.125	-0.179	-0.125	0.3	0.3	100.0	103.8	0.19
6Z-CWS-MFN-01H-100	0.179	0.125	-0.179	-0.125	0.3	0.3	100.0	103.8	0.19
6Z-CWS-MFN-01I-100	0.179	0.125	-0.179	-0.125	0.4	0.3	100.0	103.7	0.22
6Z-CWS-MFN-01J-100	0.179	0.125	-0.179	-0.125	0.4	0.3	100.0	103.7	0.22
6Z-CWS-MPM-01A-100	3.909	1.540	-3.908	-1.536	1.6	3.7	99.0	103.4	0.07
6Z-CWS-MPM-01B-100	3.909	1.540	-3.908	-1.536	1.6	3.7	99.0	103.4	0.07
6Z-CWS-MPM-02-100	0.361	0.153	-0.360	-0.152	0.6	0.4	100.0	103.8	0.18
6Z-LVB-BUS-22	-1.812	-1.229	1.814	1.233	2.4	4.3	97.4	97.6	0.20
6Z-LVB-MCC-121-200	-0.915	-0.543	0.916	0.545	1.4	2.1	97.0	97.2	0.21
6Z-LVB-MCC-122-200	-0.909	-0.539	0.910	0.541	1.4	2.0	97.0	97.2	0.21
6Z-LVB-MCC-123-200	-0.864	-0.175	0.865	0.177	1.0	1.4	97.1	97.2	0.14
6Z-LVB-MCC-221-200	-0.904	-0.613	0.906	0.615	1.5	2.0	97.2	97.4	0.21
6Z-LVB-MCC-222-200	-0.904	-0.613	0.906	0.615	1.5	2.0	97.2	97.4	0.21
6Z-MPT-XFR-1	54.914	42.345	-54.553	-31.696	361.0	10648.6	100.0	99.0	0.97
6Z-MVA-BUS-1	-54.545	-31.681	54.553	31.696	7.9	14.5	99.0	99.0	0.02
6Z-MVA-BUS-12	-2.691	-1.263	2.696	1.272	4.3	8.7	97.2	97.5	0.25
6Z-MVA-SWG-2-100	4.975	2.775	-4.967	-2.754	8.7	20.6	99.0	98.7	0.31
6Z-MVA-SWG-21-100	-3.132	-1.281	3.132	1.281	0.3	0.4	99.7	99.7	0.01
6Z-MVC-SWG-11-100	-2.154	-1.401	2.155	1.401	0.2	0.4	100.0	100.0	0.01
6Z-SUS-XFR-11	2.159	1.467	-2.155	-1.401	4.9	65.8	99.0	100.0	0.96
6Z-SUS-XFR-11-100	2.159	1.467	-2.159	-1.467	0.1	0.1	99.0	99.0	0.00
6Z-SUS-XFR-12	2.717	1.502	-2.696	-1.272	21.6	230.1	99.0	97.5	1.52
6Z-SUS-XFR-12-100	2.717	1.502	-2.717	-1.502	0.1	0.2	99.0	99.0	0.01
6Z-SUS-XFR-21	3.141	1.396	-3.132	-1.281	8.5	114.8	98.7	99.7	0.97
6Z-SUS-XFR-21-100	3.141	1.396	-3.141	-1.396	0.1	0.3	98.7	98.7	0.01
6Z-SUS-XFR-22	1.826	1.358	-1.814	-1.233	11.7	124.4	98.7	97.6	1.10
6Z-SUS-XFR-22-100	1.826	1.358	-1.826	-1.358	0.1	0.1	98.7	98.7	0.01
DCC1 FEEDER	1.566	0.640	-1.564	-0.638	1.9	2.8	99.7	99.5	0.17

Project:		ETAP		Page:	17
Location:		20.6.0C		Date:	04-18-2023
Contract:				SN:	KIEWITRWN9
Engineer:				Revision:	Base
Filename:	GE-Southern		Study Case: LF NL LV	Config.:	Normal

Branch ID	From-To Bus Flow		To-From Bus Flow		Losses		% Bus Voltage		Vd % Drop
	MW	Mvar	MW	Mvar	kW	kvar	From	To	in Vmag
DCC2 FEEDER	1.566	0.640	-1.564	-0.638	1.9	2.8	99.7	99.5	0.17
Linde 1 Feeder	36.874	22.859	-36.867	-22.848	7.2	10.6	99.0	99.0	0.03
					456.3	11269.4			

* This Transmission Line includes Series Capacitor.

Project:		ETAP		Page:	18
Location:		20.6.0C		Date:	04-18-2023
Contract:				SN:	KIEWITRWN9
Engineer:				Revision:	Base
Filename:	GE-Southern	Study Case: LF NL LV		Config.:	Normal

Alert Summary Report

	% Alert Settings	
	Critical	Marginal
Loading		
Bus	100.0	98.0
Cable / Busway	100.0	98.0
Reactor	100.0	98.0
Line	100.0	98.0
Transformer	100.0	98.0
Panel	100.0	98.0
Protective Device	100.0	98.0
Generator	100.0	98.0
Inverter/Charger	100.0	98.0
Bus Voltage		
OverVoltage	105.0	102.0
UnderVoltage	95.0	98.0
Generator Excitation		
OverExcited (Q Max.)	100.0	95.0
UnderExcited (Q Min.)	100.0	

Marginal Report

Device ID	Type	Condition	Rating/Limit	Unit	Operating	% Operating	Phase Type
6Z-LVB-MCC-121	Bus	Under Voltage	0.480	kV	0.466	97.0	3-Phase
6Z-LVB-MCC-122	Bus	Under Voltage	0.480	kV	0.466	97.0	3-Phase
6Z-LVB-MCC-123	Bus	Under Voltage	0.480	kV	0.466	97.1	3-Phase
6Z-LVB-MCC-221	Bus	Under Voltage	0.480	kV	0.467	97.2	3-Phase
6Z-LVB-MCC-222	Bus	Under Voltage	0.480	kV	0.467	97.2	3-Phase
6Z-LVB-SWG-12	Bus	Under Voltage	0.480	kV	0.467	97.2	3-Phase
6Z-LVB-SWG-22	Bus	Under Voltage	0.480	kV	0.468	97.4	3-Phase
Bus18	Bus	Over Voltage	4.000	kV	4.151	103.8	3-Phase
Bus2	Bus	Over Voltage	4.000	kV	4.149	103.7	3-Phase
Bus20	Bus	Over Voltage	4.000	kV	4.151	103.8	3-Phase
Bus21	Bus	Over Voltage	4.000	kV	4.151	103.8	3-Phase
Bus22	Bus	Over Voltage	4.000	kV	4.151	103.8	3-Phase
Bus23	Bus	Over Voltage	4.000	kV	4.151	103.8	3-Phase
Bus24	Bus	Over Voltage	4.000	kV	4.150	103.8	3-Phase
Bus25	Bus	Over Voltage	4.000	kV	4.150	103.8	3-Phase

Project:		ETAP		Page:	19
Location:		20.6.0C		Date:	04-18-2023
Contract:				SN:	KIEWITRWN9
Engineer:				Revision:	Base
Filename:	GE-Southern		Study Case: LF NL LV	Config.:	Normal

Marginal Report

Device ID	Type	Condition	Rating/Limit	Unit	Operating	% Operating	Phase Type
Bus26	Bus	Over Voltage	4.000	kV	4.151	103.8	3-Phase
Bus28	Bus	Over Voltage	13.200	kV	13.654	103.4	3-Phase
Bus29	Bus	Over Voltage	4.000	kV	4.151	103.8	3-Phase
Bus43	Bus	Over Voltage	4.000	kV	4.149	103.7	3-Phase
Bus6	Bus	Over Voltage	13.200	kV	13.654	103.4	3-Phase
FIRE PUMP TAP BUS	Bus	Under Voltage	0.480	kV	0.467	97.2	3-Phase
SUS 12 Secondary	Bus	Under Voltage	0.480	kV	0.468	97.5	3-Phase
SUS 22 SECONDARY	Bus	Under Voltage	0.480	kV	0.468	97.6	3-Phase

SUMMARY OF TOTAL GENERATION, LOADING & DEMAND

	MW	Mvar	MVA	% PF
Source (Swing Buses):	54.914	42.345	69.344	79.19 Lagging
Source (Non-Swing Buses):	0.000	0.000	0.000	
Total Demand:	54.914	42.345	69.344	79.19 Lagging
Total Motor Load:	52.705	30.348	60.817	86.66 Lagging
Total Static Load:	1.753	0.727	1.898	92.36 Lagging
Total Constant I Load:	0.000	0.000	0.000	
Total Generic Load:	0.000	0.000	0.000	
Apparent Losses:	0.456	11.269		
System Mismatch:	0.000	0.000		

Number of Iterations: 3

Project:	**ETAP**	Page:	1
Location:	20.6.0C	Date:	04-18-2023
Contract:		SN:	KIEWITRWN9
Engineer:	Study Case: LF NL HV	Revision:	Base
Filename: GE-Southern		Config.:	Normal

Electrical Transient Analyzer Program

Load Flow Analysis

Loading Category (2): NORMAL

Generation Category (1): MAXV

Load Diversity Factor: Bus Maximum

	Swing	V-Control	Load	Total
Number of Buses:	1	0	37	38

	XFMR2	XFMR3	Reactor	Line/Cable/ Busway	Impedance	Tie PD	Total
Number of Branches:	5	0	0	31	0	1	37

Method of Solution:	Adaptive Newton-Raphson Method
Maximum No. of Iteration:	99
Precision of Solution:	0.0001000
System Frequency:	60.00 Hz
Unit System:	English
Project Filename:	GE-Southern
Output Filename:	\\kiewitplaza\kegi\Data\ES\20041223-FOA2515_GE_Southern_Linde_Advanced_NGCC_Integration\ENG\Engineering\Elec_Controls\Calcs\ETAP\GE-Southern\LF-6.lfr

Project:		ETAP		Page:	2
Location:		20.6.0C		Date:	04-18-2023
Contract:				SN:	KIEWITRWN9
Engineer:				Revision:	Base
Filename:	GE-Southern		Study Case: LF NL HV	Config.:	Normal

Adjustments

Tolerance	Apply Adjustments	Individual /Global	Percent
Transformer Impedance:	Yes	Individual	
Reactor Impedance:	Yes	Individual	
Overload Heater Resistance:	No		
Transmission Line Length:	Yes	Individual	
Cable / Busway Length:	Yes	Individual	

Temperature Correction	Apply Adjustments	Individual /Global	Degree C
Transmission Line Resistance:	Yes	Individual	
Cable / Busway Resistance:	Yes	Individual	

Project:	ETAP	Page:	3
Location:	20.6.0C	Date:	04-18-2023
Contract:		SN:	KIEWITRWN9
Engineer:		Revision:	Base
Filename: GE-Southern	Study Case: LF NL HV	Config.:	Normal

Bus Input Data

Bus			Initial Voltage		Load							
					Constant kVA		Constant Z		Constant I		Generic	
ID	kV	Sub-sys	% Mag.	Ang.	MW	Mvar	MW	Mvar	MW	Mvar	MW	Mvar
6Z-LVB-MCC-121	0.480	1	100.0	0.0	0.616	0.365	0.317	0.188				
6Z-LVB-MCC-122	0.480	1	100.0	0.0	0.612	0.363	0.315	0.187				
6Z-LVB-MCC-123	0.480	1	100.0	0.0			0.917	0.186				
6Z-LVB-MCC-221	0.480	1	100.0	0.0	0.758	0.513	0.155	0.105				
6Z-LVB-MCC-222	0.480	1	100.0	0.0	0.758	0.513	0.155	0.105				
6Z-LVB-SWG-12	0.480	1	100.0	0.0								
6Z-LVB-SWG-22	0.480	1	100.0	0.0								
6Z-MVA-SWG-1	13.800	1	100.0	0.0								
6Z-MVA-SWG-2	13.800	1	100.0	0.0								
6Z-MVC-SWG-11	4.160	1	100.0	0.0								
6Z-MVC-SWG-21	4.160	1	100.0	0.0								
Bus2	4.000	1	100.0	0.0	0.179	0.125						
Bus6	13.200	1	100.0	0.0	3.908	1.536						
Bus7	13.800	1	100.0	0.0	36.867	22.848						
Bus8	4.160	1	100.0	0.0	1.564	0.638						
Bus9	4.160	1	100.0	0.0	1.564	0.638						
Bus18	4.000	1	100.0	0.0	0.179	0.125						
Bus20	4.000	1	100.0	0.0	0.179	0.125						
Bus21	4.000	1	100.0	0.0	0.179	0.125						
Bus22	4.000	1	100.0	0.0	0.179	0.125						
Bus23	4.000	1	100.0	0.0	0.179	0.125						
Bus24	4.000	1	100.0	0.0	0.179	0.125						
Bus25	4.000	1	100.0	0.0	0.179	0.125						
Bus26	4.000	1	100.0	0.0	0.179	0.125						
Bus28	13.200	1	100.0	0.0	3.908	1.536						
Bus29	4.000	1	100.0	0.0	0.360	0.152						
Bus43	4.000	1	100.0	0.0	0.179	0.125						
FIRE PUMP TAP BUS	0.480	1	100.0	0.0								
HV BUS	230.000	1	104.3	0.0								
MPT X WINDING	13.800	1	100.0	0.0								
SUS 11 Primary	13.800	1	100.0	0.0								
SUS 11 Secondary	4.160	1	100.0	0.0								
SUS 12 Primary	13.800	1	100.0	0.0								

Project:	ETAP	Page:	4
Location:	20.6.0C	Date:	04-18-2023
Contract:		SN:	KIEWITRWN9
Engineer:	Study Case: LF NL HV	Revision:	Base
Filename: GE-Southern		Config.:	Normal

Bus			Initial Voltage		Load							
					Constant kVA		Constant Z		Constant I		Generic	
ID	kV	Sub-sys	% Mag.	Ang.	MW	Mvar	MW	Mvar	MW	Mvar	MW	Mvar
SUS 12 Secondary	0.480	1	100.0	0.0								
SUS 21 PRIMARY	13.800	1	100.0	0.0								
SUS 21 SECONDARY	4.160	1	100.0	0.0								
SUS 22 PRIMARY	13.800	1	100.0	0.0								
SUS 22 SECONDARY	0.480	1	100.0	0.0								
Total Number of Buses: 38					52.705	30.348	1.860	0.772	0.000	0.000	0.000	0.000

Generation Bus				Voltage		Generation			Mvar Limits	
ID	kV	Type	Sub-sys	% Mag.	Angle	MW	Mvar	% PF	Max	Min
HV BUS	230.000	Swing	1	104.3	0.0					
						0.000	0.000			

Project:		ETAP		Page:	5
Location:		20.6.0C		Date:	04-18-2023
Contract:				SN:	KIEWITRWN9
Engineer:				Revision:	Base
Filename:	GE-Southern	Study Case: LF NL HV		Config.:	Normal

Line/Cable/Busway Input Data

ohms or siemens/1000 ft per Conductor (Cable) or per Phase (Line/Busway)

Line/Cable/Busway ID	Library	Size	Length Adj. (ft)	Length % Tol.	#/Phase	T (°C)	R	X	Y
6Z-CWS-MFN-01A-100	5.0NCUS1	1/0	800.0	0.0	1	75	0.127806	0.098000	
6Z-CWS-MFN-01B-100	5.0NCUS1	1/0	800.0	0.0	1	75	0.127806	0.098000	
6Z-CWS-MFN-01C-100	5.0NCUS1	1/0	850.0	0.0	1	75	0.127806	0.098000	
6Z-CWS-MFN-01D-100	5.0NCUS1	1/0	850.0	0.0	1	75	0.127806	0.098000	
6Z-CWS-MFN-01E-100	5.0NCUS1	1/0	900.0	0.0	1	75	0.127806	0.098000	
6Z-CWS-MFN-01F-100	5.0NCUS1	1/0	900.0	0.0	1	75	0.127806	0.098000	
6Z-CWS-MFN-01G-100	5.0NCUS1	1/0	950.0	0.0	1	75	0.127806	0.098000	
6Z-CWS-MFN-01H-100	5.0NCUS1	1/0	950.0	0.0	1	75	0.127806	0.098000	
6Z-CWS-MFN-01I-100	5.0NCUS1	1/0	1100.0	0.0	1	75	0.127806	0.098000	
6Z-CWS-MFN-01J-100	5.0NCUS1	1/0	1100.0	0.0	1	75	0.127806	0.098000	
6Z-CWS-MPM-01A-100	15NCUS1	500	500.0	0.0	1	75	0.033382	0.079000	
6Z-CWS-MPM-01B-100	15NCUS1	500	500.0	0.0	1	75	0.033382	0.079000	
6Z-CWS-MPM-02-100	5.0NCUS1	1/0	500.0	0.0	1	75	0.127806	0.098000	
6Z-LVB-BUS-22	0.6NCUN1	750	50.0	0.0	9	75	0.019400	0.035600	
6Z-LVB-MCC-121-200	0.6NCUN1	500	50.0	0.0	5	75	0.027000	0.039600	
6Z-LVB-MCC-122-200	0.6NCUN1	500	50.0	0.0	5	75	0.027000	0.039600	
6Z-LVB-MCC-123-200	0.6NCUN1	500	50.0	0.0	5	75	0.027000	0.039600	
6Z-LVB-MCC-221-200	0.6NCUN1	500	50.0	0.0	5	75	0.027600	0.037300	
6Z-LVB-MCC-222-200	0.6NCUN1	500	50.0	0.0	5	75	0.027600	0.037300	
6Z-MVA-BUS-1	15NCUN1	750	100.0	0.0	5	75	0.018503	0.034000	
6Z-MVA-BUS-12	0.6NCUN1	750	50.0	0.0	9	75	0.019000	0.038400	
6Z-MVA-SWG-2-100	15NCUS1	500	1500.0	0.0	1	75	0.033382	0.079000	
6Z-MVA-SWG-21-100	5.0NCUS3	500	50.0	0.0	3	75	0.028400	0.035100	
6Z-MVC-SWG-11-100	5.0NCUS1	500	50.0	0.0	3	75	0.026222	0.061417	
6Z-SUS-XFR-11-100	15NCUS1	500	50.0	0.0	1	75	0.028400	0.042100	
6Z-SUS-XFR-12-100	5.0NCUS1	350	50.0	0.0	1	75	0.037095	0.063246	
6Z-SUS-XFR-21-100	15NCUS1	500	50.0	0.0	1	75	0.033382	0.079000	
6Z-SUS-XFR-22-100	5.0NCUS3	500	100.0	0.0	1	75	0.028400	0.035100	
DCC1 FEEDER	5.0NCUS1	500	400.0	0.0	1	75	0.028400	0.042100	
DCC2 FEEDER	5.0NCUS1	500	400.0	0.0	1	75	0.028400	0.042100	
Linde 1 Feeder	15NCUS1	500	250.0	0.0	10	75	0.028400	0.042100	

Line / Cable / Busway resistances are listed at the specified temperatures.

Project:	ETAP	Page:	6
Location:	20.6.0C	Date:	04-18-2023
Contract:		SN:	KIEWITRWN9
Engineer:		Revision:	Base
Filename: GE-Southern	Study Case: LF NL HV	Config.:	Normal

2-Winding Transformer Input Data

Transformer		Rating					Z Variation			% Tap Setting		Adjusted	Phase Shift	
ID	Phase	MVA	Prim. kV	Sec. kV	% Z1	X1/R1	+ 5%	- 5%	% Tol.	Prim.	Sec.	% Z	Type	Angle
6Z-MPT-XFR-1	3-Phase	43.000	230.000	13.800	10.50	29.50	0	0	7.5	0	0	11.2875	Dyn	0.000
6Z-SUS-XFR-11	3-Phase	7.000	13.800	4.160	6.50	13.55	0	0	7.5	-2.500	0	6.9875	Dyn	0.000
6Z-SUS-XFR-12	3-Phase	2.500	13.800	0.480	5.75	10.67	0	0	7.5	-2.500	0	6.1813	Dyn	0.000
6Z-SUS-XFR-21	3-Phase	7.000	13.800	4.160	6.50	13.55	0	0	7.5	-2.500	0	6.9875	Dyn	0.000
6Z-SUS-XFR-22	3-Phase	2.500	13.800	0.480	5.75	10.67	0	0	7.5	-2.500	0	6.1813	Dyn	0.000

2-Winding Transformer Load Tap Changer (LTC) Settings

Transformer	Connected Buses ("*" LTC Side)		Transformer Load Tap Changer Setting					
ID	Primary Bus ID	Secondary Bus ID	% Min. Tap	% Max. Tap	% Step	Regulated Bus ID	% V	kV
6Z-MPT-XFR-1	* HV BUS	MPT X WINDING	-10.00	10.00	0.625	MPT X WINDING	100.00	13.800

Project:		ETAP		Page:	7
Location:		20.6.0C		Date:	04-18-2023
Contract:				SN:	KIEWITRWN9
Engineer:				Revision:	Base
Filename:	GE-Southern		Study Case: LF NL HV	Config.:	Normal

Branch Connections

CKT/Branch		Connected Bus ID		% Impedance, Pos. Seq., 100 MVA Base			
ID	Type	From Bus	To Bus	R	X	Z	Y
6Z-MPT-XFR-1	2W XFMR	HV BUS	MPT X WINDING	0.89	26.23	26.25	
6Z-SUS-XFR-11	2W XFMR	SUS 11 Primary	SUS 11 Secondary	7.16	97.06	97.33	
6Z-SUS-XFR-12	2W XFMR	SUS 12 Primary	SUS 12 Secondary	22.49	240.02	241.07	
6Z-SUS-XFR-21	2W XFMR	SUS 21 PRIMARY	SUS 21 SECONDARY	7.16	97.06	97.33	
6Z-SUS-XFR-22	2W XFMR	SUS 22 PRIMARY	SUS 22 SECONDARY	22.49	240.02	241.07	
6Z-CWS-MFN-01A-100	Cable	6Z-MVC-SWG-11	Bus18	59.08	45.30	74.45	
6Z-CWS-MFN-01B-100	Cable	6Z-MVC-SWG-11	Bus20	59.08	45.30	74.45	
6Z-CWS-MFN-01C-100	Cable	6Z-MVC-SWG-11	Bus21	62.77	48.13	79.10	
6Z-CWS-MFN-01D-100	Cable	6Z-MVC-SWG-11	Bus26	62.77	48.13	79.10	
6Z-CWS-MFN-01E-100	Cable	6Z-MVC-SWG-11	Bus22	66.47	50.97	83.76	
6Z-CWS-MFN-01F-100	Cable	6Z-MVC-SWG-11	Bus23	66.47	50.97	83.76	
6Z-CWS-MFN-01G-100	Cable	6Z-MVC-SWG-11	Bus24	70.16	53.80	88.41	
6Z-CWS-MFN-01H-100	Cable	6Z-MVC-SWG-11	Bus25	70.16	53.80	88.41	
6Z-CWS-MFN-01I-100	Cable	6Z-MVC-SWG-11	Bus43	81.24	62.29	102.37	
6Z-CWS-MFN-01J-100	Cable	6Z-MVC-SWG-11	Bus2	81.24	62.29	102.37	
6Z-CWS-MPM-01A-100	Cable	6Z-MVA-SWG-1	Bus6	0.88	2.07	2.25	
6Z-CWS-MPM-01B-100	Cable	6Z-MVA-SWG-1	Bus28	0.88	2.07	2.25	
6Z-CWS-MPM-02-100	Cable	6Z-MVC-SWG-11	Bus29	36.93	28.31	46.53	
6Z-LVB-BUS-22	Cable	SUS 22 SECONDARY	6Z-LVB-SWG-22	4.68	8.58	9.78	
6Z-LVB-MCC-121-200	Cable	6Z-LVB-SWG-12	6Z-LVB-MCC-121	11.72	17.19	20.80	
6Z-LVB-MCC-122-200	Cable	6Z-LVB-SWG-12	6Z-LVB-MCC-122	11.72	17.19	20.80	
6Z-LVB-MCC-123-200	Cable	6Z-LVB-SWG-12	6Z-LVB-MCC-123	11.72	17.19	20.80	
6Z-LVB-MCC-221-200	Cable	6Z-LVB-SWG-22	6Z-LVB-MCC-221	11.98	16.19	20.14	
6Z-LVB-MCC-222-200	Cable	6Z-LVB-SWG-22	6Z-LVB-MCC-222	11.98	16.19	20.14	
6Z-MVA-BUS-1	Cable	MPT X WINDING	6Z-MVA-SWG-1	0.02	0.04	0.04	
6Z-MVA-BUS-12	Cable	SUS 12 Secondary	FIRE PUMP TAP BUS	4.58	9.26	10.33	
6Z-MVA-SWG-2-100	Cable	6Z-MVA-SWG-1	6Z-MVA-SWG-2	2.63	6.22	6.76	
6Z-MVA-SWG-21-100	Cable	SUS 21 SECONDARY	6Z-MVC-SWG-21	0.27	0.34	0.43	
6Z-MVC-SWG-11-100	Cable	SUS 11 Secondary	6Z-MVC-SWG-11	0.25	0.59	0.64	
6Z-SUS-XFR-11-100	Cable	6Z-MVA-SWG-1	SUS 11 Primary	0.07	0.11	0.13	
6Z-SUS-XFR-12-100	Cable	6Z-MVA-SWG-1	SUS 12 Primary	0.10	0.17	0.19	
6Z-SUS-XFR-21-100	Cable	6Z-MVA-SWG-2	SUS 21 PRIMARY	0.09	0.21	0.23	
6Z-SUS-XFR-22-100	Cable	6Z-MVA-SWG-2	SUS 22 PRIMARY	0.15	0.18	0.24	
DCC1 FEEDER	Cable	6Z-MVC-SWG-21	Bus8	6.56	9.73	11.74	
DCC2 FEEDER	Cable	6Z-MVC-SWG-21	Bus9	6.56	9.73	11.74	
Linde 1 Feeder	Cable	6Z-MVA-SWG-1	Bus7	0.04	0.06	0.07	

Project:		ETAP		Page:	8
Location:		20.6.0C		Date:	04-18-2023
Contract:				SN:	KIEWITRWN9
Engineer:		Study Case: LF NL HV		Revision:	Base
Filename:	GE-Southern			Config.:	Normal

CKT/Branch		Connected Bus ID		% Impedance, Pos. Seq., 100 MVA Base			
ID	Type	From Bus	To Bus	R	X	Z	Y
CB12	Tie Breakr	FIRE PUMP TAP BUS	6Z-LVB-SWG-12				

Project:		ETAP		Page:	9
Location:		20.6.0C		Date:	04-18-2023
Contract:				SN:	KIEWITRWN9
Engineer:				Revision:	Base
Filename:	GE-Southern		Study Case: LF NL HV	Config.:	Normal

LOAD FLOW REPORT

Bus		Voltage		Generation		Load		Load Flow					XFMR
ID	kV	% Mag.	Ang.	MW	Mvar	MW	Mvar	ID	MW	Mvar	Amp	%PF	%Tap
6Z-LVB-MCC-121	0.480	97.296	-11.3	0.000	0.000	0.916	0.544	6Z-LVB-SWG-12	-0.916	-0.544	1316.9	86.0	
6Z-LVB-MCC-122	0.480	97.297	-11.3	0.000	0.000	0.911	0.540	6Z-LVB-SWG-12	-0.911	-0.540	1309.0	86.0	
6Z-LVB-MCC-123	0.480	97.367	-11.3	0.000	0.000	0.869	0.176	6Z-LVB-SWG-12	-0.869	-0.176	1095.4	98.0	
6Z-LVB-MCC-221	0.480	97.461	-10.1	0.000	0.000	0.905	0.613	6Z-LVB-SWG-22	-0.905	-0.613	1349.3	82.8	
6Z-LVB-MCC-222	0.480	97.461	-10.1	0.000	0.000	0.905	0.613	6Z-LVB-SWG-22	-0.905	-0.613	1349.3	82.8	
6Z-LVB-SWG-12	0.480	97.502	-11.2	0.000	0.000	0.000	0.000	6Z-LVB-MCC-121	0.918	0.546	1316.9	85.9	
								6Z-LVB-MCC-122	0.912	0.542	1309.0	85.9	
								6Z-LVB-MCC-123	0.870	0.178	1095.4	98.0	
								FIRE PUMP TAP BUS	-2.699	-1.266	3678.1	90.5	
6Z-LVB-SWG-22	0.480	97.674	-10.1	0.000	0.000	0.000	0.000	SUS 22 SECONDARY	-1.814	-1.230	2698.7	82.8	
								6Z-LVB-MCC-221	0.907	0.615	1349.3	82.8	
								6Z-LVB-MCC-222	0.907	0.615	1349.3	82.8	
6Z-MVA-SWG-1	13.800	99.266	-7.5	0.000	0.000	0.000	0.000	Bus6	3.909	1.540	177.1	93.0	
								Bus28	3.909	1.540	177.1	93.0	
								MPT X WINDING	-54.554	-31.684	2658.9	86.5	
								6Z-MVA-SWG-2	4.977	2.775	240.2	87.3	
								SUS 11 Primary	2.159	1.467	110.0	82.7	
								SUS 12 Primary	2.725	1.505	131.2	87.5	
								Bus7	36.874	22.859	1828.5	85.0	
6Z-MVA-SWG-2	13.800	98.960	-7.6	0.000	0.000	0.000	0.000	6Z-MVA-SWG-1	-4.968	-2.754	240.2	87.5	
								SUS 21 PRIMARY	3.141	1.396	145.3	91.4	
								SUS 22 PRIMARY	1.828	1.359	96.3	80.3	
6Z-MVC-SWG-11	4.160	100.225	-8.6	0.000	0.000	0.000	0.000	Bus18	0.179	0.125	30.3	82.1	
								Bus20	0.179	0.125	30.3	82.1	
								Bus21	0.179	0.125	30.3	82.1	
								Bus26	0.179	0.125	30.3	82.1	
								Bus22	0.179	0.125	30.3	82.1	
								Bus23	0.179	0.125	30.3	82.1	
								Bus24	0.179	0.125	30.3	82.1	
								Bus25	0.179	0.125	30.3	82.1	
								Bus43	0.179	0.125	30.3	82.1	

Project:		ETAP		Page:	10
Location:		20.6.0C		Date:	04-18-2023
Contract:				SN:	KIEWITRWN9
Engineer:				Revision:	Base
Filename:	GE-Southern		Study Case: LF NL HV	Config.:	Normal

Bus		Voltage		Generation		Load		Load Flow					XFMR
ID	kV	% Mag.	Ang.	MW	Mvar	MW	Mvar	ID	MW	Mvar	Amp	%PF	%Tap
								Bus2	0.179	0.125	30.3	82.1	
								Bus29	0.361	0.153	54.2	92.1	
								SUS 11 Secondary	-2.154	-1.401	355.8	83.8	
6Z-MVC-SWG-21	4.160	99.928	-9.3	0.000	0.000	0.000	0.000	SUS 21 SECONDARY	-3.132	-1.281	469.9	92.6	
								Bus8	1.566	0.640	235.0	92.6	
								Bus9	1.566	0.640	235.0	92.6	
Bus2	4.000	104.002	-8.6	0.000	0.000	0.179	0.125	6Z-MVC-SWG-11	-0.179	-0.125	30.3	82.1	
Bus6	13.200	103.708	-7.5	0.000	0.000	3.908	1.536	6Z-MVA-SWG-1	-3.908	-1.536	177.1	93.1	
Bus7	13.800	99.239	-7.5	0.000	0.000	36.867	22.848	6Z-MVA-SWG-1	-36.867	-22.848	1828.5	85.0	
Bus8	4.160	99.762	-9.4	0.000	0.000	1.564	0.638	6Z-MVC-SWG-21	-1.564	-0.638	235.0	92.6	
Bus9	4.160	99.762	-9.4	0.000	0.000	1.564	0.638	6Z-MVC-SWG-21	-1.564	-0.638	235.0	92.6	
Bus18	4.000	104.065	-8.6	0.000	0.000	0.179	0.125	6Z-MVC-SWG-11	-0.179	-0.125	30.3	82.1	
Bus20	4.000	104.065	-8.6	0.000	0.000	0.179	0.125	6Z-MVC-SWG-11	-0.179	-0.125	30.3	82.1	
Bus21	4.000	104.054	-8.6	0.000	0.000	0.179	0.125	6Z-MVC-SWG-11	-0.179	-0.125	30.3	82.1	
Bus22	4.000	104.044	-8.6	0.000	0.000	0.179	0.125	6Z-MVC-SWG-11	-0.179	-0.125	30.3	82.1	
Bus23	4.000	104.044	-8.6	0.000	0.000	0.179	0.125	6Z-MVC-SWG-11	-0.179	-0.125	30.3	82.1	
Bus24	4.000	104.033	-8.6	0.000	0.000	0.179	0.125	6Z-MVC-SWG-11	-0.179	-0.125	30.3	82.1	
Bus25	4.000	104.033	-8.6	0.000	0.000	0.179	0.125	6Z-MVC-SWG-11	-0.179	-0.125	30.3	82.1	
Bus26	4.000	104.054	-8.6	0.000	0.000	0.179	0.125	6Z-MVC-SWG-11	-0.179	-0.125	30.3	82.1	
Bus28	13.200	103.708	-7.5	0.000	0.000	3.908	1.536	6Z-MVA-SWG-1	-3.908	-1.536	177.1	93.1	
Bus29	4.000	104.050	-8.6	0.000	0.000	0.360	0.152	6Z-MVC-SWG-11	-0.360	-0.152	54.2	92.1	
Bus43	4.000	104.002	-8.6	0.000	0.000	0.179	0.125	6Z-MVC-SWG-11	-0.179	-0.125	30.3	82.1	
FIRE PUMP TAP BUS	0.480	97.502	-11.2	0.000	0.000	0.000	0.000	SUS 12 Secondary	-2.699	-1.266	3678.1	90.5	
								6Z-LVB-SWG-12	2.699	1.266	3678.1	90.5	
* HV BUS	230.000	104.300	0.0	54.921	42.295	0.000	0.000	MPT X WINDING	54.921	42.295	166.8	79.2	-4.375
MPT X WINDING	13.800	99.288	-7.4	0.000	0.000	0.000	0.000	6Z-MVA-SWG-1	54.562	31.698	2658.9	86.5	
								HV BUS	-54.562	-31.698	2658.9	86.5	
SUS 11 Primary	13.800	99.263	-7.5	0.000	0.000	0.000	0.000	6Z-MVA-SWG-1	-2.159	-1.466	110.0	82.7	
								SUS 11 Secondary	2.159	1.466	110.0	82.7	-2.500
SUS 11 Secondary	4.160	100.238	-8.6	0.000	0.000	0.000	0.000	6Z-MVC-SWG-11	2.155	1.401	355.8	83.8	
								SUS 11 Primary	-2.155	-1.401	355.8	83.8	
SUS 12 Primary	13.800	99.261	-7.5	0.000	0.000	0.000	0.000	6Z-MVA-SWG-1	-2.725	-1.505	131.2	87.5	
								SUS 12 Secondary	2.725	1.505	131.2	87.5	-2.500

Project:	ETAP	Page:	11
Location:	20.6.0C	Date:	04-18-2023
Contract:		SN:	KIEWITRWN9
Engineer:	Study Case: LF NL HV	Revision:	Base
Filename: GE-Southern		Config.:	Normal

Bus		Voltage		Generation		Load		Load Flow					XFMR
ID	kV	% Mag.	Ang.	MW	Mvar	MW	Mvar	ID	MW	Mvar	Amp	%PF	%Tap
SUS 12 Secondary	0.480	97.750	-11.1	0.000	0.000	0.000	0.000	FIRE PUMP TAP BUS	2.704	1.275	3678.1	90.5	
								SUS 12 Primary	-2.704	-1.275	3678.1	90.5	
SUS 21 PRIMARY	13.800	98.955	-7.6	0.000	0.000	0.000	0.000	6Z-MVA-SWG-2	-3.140	-1.395	145.3	91.4	
								SUS 21 SECONDARY	3.140	1.395	145.3	91.4	-2.500
SUS 21 SECONDARY	4.160	99.941	-9.3	0.000	0.000	0.000	0.000	6Z-MVC-SWG-21	3.132	1.281	469.9	92.6	
								SUS 21 PRIMARY	-3.132	-1.281	469.9	92.6	
SUS 22 PRIMARY	13.800	98.955	-7.6	0.000	0.000	0.000	0.000	6Z-MVA-SWG-2	-1.828	-1.358	96.3	80.3	
								SUS 22 SECONDARY	1.828	1.358	96.3	80.3	-2.500
SUS 22 SECONDARY	0.480	97.869	-10.0	0.000	0.000	0.000	0.000	6Z-LVB-SWG-22	1.816	1.235	2698.7	82.7	
								SUS 22 PRIMARY	-1.816	-1.235	2698.7	82.7	

* Indicates a voltage regulated bus (voltage controlled or swing type machine connected to it)

# Indicates a bus with a load mismatch of more than 0.1 MVA

Project:	ETAP	Page:	12
Location:	20.6.0C	Date:	04-18-2023
Contract:		SN:	KIEWITRWN9
Engineer:	Study Case: LF NL HV	Revision:	Base
Filename: GE-Southern		Config.:	Normal

Bus Loading Summary Report

Bus			Directly Connected Load								Total Bus Load			
			Constant kVA		Constant Z		Constant I		Generic					Percent
ID	kV	Rated Amp	MW	Mvar	MW	Mvar	MW	Mvar	MW	Mvar	MVA	% PF	Amp	Loading
6Z-LVB-MCC-121	0.480	1600.0	0.616	0.365	0.300	0.178					1.065	86.0	1316.9	82.3
6Z-LVB-MCC-122	0.480	1600.0	0.612	0.363	0.299	0.177					1.059	86.0	1309.0	81.8
6Z-LVB-MCC-123	0.480	1600.0			0.869	0.176					0.887	98.0	1095.4	68.5
6Z-LVB-MCC-221	0.480	1600.0	0.758	0.513	0.147	0.100					1.093	82.8	1349.3	84.3
6Z-LVB-MCC-222	0.480	1600.0	0.758	0.513	0.147	0.100					1.093	82.8	1349.3	84.3
6Z-LVB-SWG-12	0.480	4000.0									2.982	90.5	3678.1	92.0
6Z-LVB-SWG-22	0.480	4000.0									2.191	82.8	2698.7	67.5
6Z-MVA-SWG-1	13.800	3000.0									63.088	86.5	2658.9	88.6
6Z-MVA-SWG-2	13.800	1200.0									5.680	87.5	240.2	20.0
6Z-MVC-SWG-11	4.160	1200.0									2.570	83.8	355.8	29.7
6Z-MVC-SWG-21	4.160	1200.0									3.383	92.6	469.9	39.2
Bus2	4.000		0.179	0.125							0.218	82.1	30.3	
Bus6	13.200		3.908	1.536							4.199	93.1	177.1	
Bus7	13.800		36.867	22.848							43.373	85.0	1828.5	
Bus8	4.160		1.564	0.638							1.689	92.6	235.0	
Bus9	4.160		1.564	0.638							1.689	92.6	235.0	
Bus18	4.000		0.179	0.125							0.218	82.1	30.3	
Bus20	4.000		0.179	0.125							0.218	82.1	30.3	
Bus21	4.000		0.179	0.125							0.218	82.1	30.3	
Bus22	4.000		0.179	0.125							0.218	82.1	30.3	
Bus23	4.000		0.179	0.125							0.218	82.1	30.3	
Bus24	4.000		0.179	0.125							0.218	82.1	30.3	
Bus25	4.000		0.179	0.125							0.218	82.1	30.3	
Bus26	4.000		0.179	0.125							0.218	82.1	30.3	
Bus28	13.200		3.908	1.536							4.199	93.1	177.1	
Bus29	4.000		0.360	0.152							0.391	92.1	54.2	
Bus43	4.000		0.179	0.125							0.218	82.1	30.3	
FIRE PUMP TAP BUS	0.480										2.982	90.5	3678.1	
HV BUS	230.000										69.320	79.2	166.8	
MPT X WINDING	13.800										63.102	86.5	2658.9	
SUS 11 Primary	13.800										2.610	82.7	110.0	
SUS 11 Secondary	4.160										2.570	83.8	355.8	
SUS 12 Primary	13.800										3.113	87.5	131.2	
SUS 12 Secondary	0.480										2.989	90.5	3678.1	
SUS 21 PRIMARY	13.800										3.436	91.4	145.3	
SUS 21 SECONDARY	4.160										3.384	92.6	469.9	
SUS 22 PRIMARY	13.800										2.277	80.3	96.3	
SUS 22 SECONDARY	0.480										2.196	82.7	2698.7	

Project:		ETAP		Page:	13
Location:		20.6.0C		Date:	04-18-2023
Contract:				SN:	KIEWITRWN9
Engineer:				Revision:	Base
Filename:	GE-Southern	Study Case: LF NL HV		Config.:	Normal

Bus			Directly Connected Load								Total Bus Load			
			Constant kVA		Constant Z		Constant I		Generic					
ID	kV	Rated Amp	MW	Mvar	MW	Mvar	MW	Mvar	MW	Mvar	MVA	% PF	Amp	Percent Loading

* Indicates operating load of a bus exceeds the bus critical limit (100.0% of the Continuous Ampere rating).
\# Indicates operating load of a bus exceeds the bus marginal limit (98.0% of the Continuous Ampere rating).

Project:		ETAP		Page:	14
Location:		20.6.0C		Date:	04-18-2023
Contract:				SN:	KIEWITRWN9
Engineer:				Revision:	Base
Filename:	GE-Southern		Study Case: LF NL HV	Config.:	Normal

Branch Loading Summary Report

CKT / Branch		Busway / Cable & Reactor			Transformer				
		Ampacity	Loading		Capability	Loading (input)		Loading (output)	
ID	Type	(Amp)	Amp	%	(MVA)	MVA	%	MVA	%
6Z-CWS-MFN-01A-100	Cable	124.58	30.25	24.28					
6Z-CWS-MFN-01B-100	Cable	124.58	30.25	24.28					
6Z-CWS-MFN-01C-100	Cable	124.58	30.25	24.28					
6Z-CWS-MFN-01D-100	Cable	124.58	30.25	24.28					
6Z-CWS-MFN-01E-100	Cable	124.58	30.26	24.29					
6Z-CWS-MFN-01F-100	Cable	124.58	30.26	24.29					
6Z-CWS-MFN-01G-100	Cable	124.58	30.26	24.29					
6Z-CWS-MFN-01H-100	Cable	124.58	30.26	24.29					
6Z-CWS-MFN-01I-100	Cable	124.58	30.27	24.30					
6Z-CWS-MFN-01J-100	Cable	124.58	30.27	24.30					
6Z-CWS-MPM-01A-100	Cable	448.89	177.08	39.45					
6Z-CWS-MPM-01B-100	Cable	448.89	177.08	39.45					
6Z-CWS-MPM-02-100	Cable	124.58	54.23	43.53					
6Z-LVB-BUS-22	Cable	5043.36	2698.66	53.51					
6Z-LVB-MCC-121-200	Cable	1965.13	1316.94	67.02					
6Z-LVB-MCC-122-200	Cable	1965.13	1308.99	66.61					
6Z-LVB-MCC-123-200	Cable	1965.13	1095.37	55.74					
6Z-LVB-MCC-221-200	Cable	1943.66	1349.33	69.42					
6Z-LVB-MCC-222-200	Cable	1943.66	1349.33	69.42					
6Z-MVA-BUS-1	Cable	3294.23	2658.91	80.71					
6Z-MVA-BUS-12	Cable	5096.18	3678.13	72.17					
6Z-MVA-SWG-2-100	Cable	448.89	240.15	53.50					
6Z-MVA-SWG-21-100	Cable	1161.03	469.92	40.47					
6Z-MVC-SWG-11-100	Cable	1730.77	355.83	20.56					
6Z-SUS-XFR-11-100	Cable	514.72	110.02	21.37					
6Z-SUS-XFR-12-100	Cable	437.12	131.22	30.02					
6Z-SUS-XFR-21-100	Cable	448.89	145.29	32.37					
6Z-SUS-XFR-22-100	Cable	387.01	96.27	24.88					
DCC1 FEEDER	Cable	444.45	234.96	52.87					
DCC2 FEEDER	Cable	444.45	234.96	52.87					
Linde 1 Feeder	Cable	5147.16	1828.50	35.52					
6Z-MPT-XFR-1	Transformer				71.668	69.320	96.7	63.102	88.0
6Z-SUS-XFR-11	Transformer				8.750	2.610	29.8	2.570	29.4

Project:		ETAP		Page:	15
Location:		20.6.0C		Date:	04-18-2023
Contract:				SN:	KIEWITRWN9
Engineer:				Revision:	Base
Filename:	GE-Southern		Study Case: LF NL HV	Config.:	Normal

CKT / Branch		Busway / Cable & Reactor			Transformer				
						Loading (input)		Loading (output)	
ID	Type	Ampacity (Amp)	Loading Amp	%	Capability (MVA)	MVA	%	MVA	%
6Z-SUS-XFR-12	Transformer				3.333	3.113	93.4	2.989	89.7
6Z-SUS-XFR-21	Transformer				8.750	3.436	39.3	3.384	38.7
6Z-SUS-XFR-22	Transformer				3.333	2.277	68.3	2.196	65.9

* Indicates a branch with operating load exceeding the branch capability.

Project:		ETAP		Page:	16
Location:		20.6.0C		Date:	04-18-2023
Contract:				SN:	KIEWITRWN9
Engineer:				Revision:	Base
Filename:	GE-Southern		Study Case: LF NL HV	Config.:	Normal

Branch Losses Summary Report

Branch ID	From-To Bus Flow		To-From Bus Flow		Losses		% Bus Voltage		Vd % Drop
	MW	Mvar	MW	Mvar	kW	kvar	From	To	in Vmag
6Z-CWS-MFN-01A-100	0.179	0.125	-0.179	-0.125	0.3	0.2	100.2	104.1	0.16
6Z-CWS-MFN-01B-100	0.179	0.125	-0.179	-0.125	0.3	0.2	100.2	104.1	0.16
6Z-CWS-MFN-01C-100	0.179	0.125	-0.179	-0.125	0.3	0.2	100.2	104.1	0.17
6Z-CWS-MFN-01D-100	0.179	0.125	-0.179	-0.125	0.3	0.2	100.2	104.1	0.17
6Z-CWS-MFN-01E-100	0.179	0.125	-0.179	-0.125	0.3	0.2	100.2	104.0	0.18
6Z-CWS-MFN-01F-100	0.179	0.125	-0.179	-0.125	0.3	0.2	100.2	104.0	0.18
6Z-CWS-MFN-01G-100	0.179	0.125	-0.179	-0.125	0.3	0.3	100.2	104.0	0.19
6Z-CWS-MFN-01H-100	0.179	0.125	-0.179	-0.125	0.3	0.3	100.2	104.0	0.19
6Z-CWS-MFN-01I-100	0.179	0.125	-0.179	-0.125	0.4	0.3	100.2	104.0	0.22
6Z-CWS-MFN-01J-100	0.179	0.125	-0.179	-0.125	0.4	0.3	100.2	104.0	0.22
6Z-CWS-MPM-01A-100	3.909	1.540	-3.908	-1.536	1.6	3.7	99.3	103.7	0.07
6Z-CWS-MPM-01B-100	3.909	1.540	-3.908	-1.536	1.6	3.7	99.3	103.7	0.07
6Z-CWS-MPM-02-100	0.361	0.153	-0.360	-0.152	0.6	0.4	100.2	104.1	0.18
6Z-LVB-BUS-22	-1.814	-1.230	1.816	1.235	2.4	4.3	97.7	97.9	0.20
6Z-LVB-MCC-121-200	-0.916	-0.544	0.918	0.546	1.4	2.1	97.3	97.5	0.21
6Z-LVB-MCC-122-200	-0.911	-0.540	0.912	0.542	1.4	2.0	97.3	97.5	0.21
6Z-LVB-MCC-123-200	-0.869	-0.176	0.870	0.178	1.0	1.4	97.4	97.5	0.14
6Z-LVB-MCC-221-200	-0.905	-0.613	0.907	0.615	1.5	2.0	97.5	97.7	0.21
6Z-LVB-MCC-222-200	-0.905	-0.613	0.907	0.615	1.5	2.0	97.5	97.7	0.21
6Z-MPT-XFR-1	54.921	42.295	-54.562	-31.698	359.2	10596.6	104.3	99.3	5.01
6Z-MVA-BUS-1	-54.554	-31.684	54.562	31.698	7.8	14.4	99.3	99.3	0.02
6Z-MVA-BUS-12	-2.699	-1.266	2.704	1.275	4.3	8.7	97.5	97.7	0.25
6Z-MVA-SWG-2-100	4.977	2.775	-4.968	-2.754	8.7	20.5	99.3	99.0	0.31
6Z-MVA-SWG-21-100	-3.132	-1.281	3.132	1.281	0.3	0.4	99.9	99.9	0.01
6Z-MVC-SWG-11-100	-2.154	-1.401	2.155	1.401	0.2	0.4	100.2	100.2	0.01
6Z-SUS-XFR-11	2.159	1.466	-2.155	-1.401	4.8	65.4	99.3	100.2	0.98
6Z-SUS-XFR-11-100	2.159	1.467	-2.159	-1.466	0.1	0.1	99.3	99.3	0.00
6Z-SUS-XFR-12	2.725	1.505	-2.704	-1.275	21.6	230.2	99.3	97.7	1.51
6Z-SUS-XFR-12-100	2.725	1.505	-2.725	-1.505	0.1	0.2	99.3	99.3	0.01
6Z-SUS-XFR-21	3.140	1.395	-3.132	-1.281	8.4	114.1	99.0	99.9	0.99
6Z-SUS-XFR-21-100	3.141	1.396	-3.140	-1.395	0.1	0.3	99.0	99.0	0.01
6Z-SUS-XFR-22	1.828	1.358	-1.816	-1.235	11.6	123.9	99.0	97.9	1.09
6Z-SUS-XFR-22-100	1.828	1.359	-1.828	-1.358	0.1	0.1	99.0	99.0	0.01
DCC1 FEEDER	1.566	0.640	-1.564	-0.638	1.9	2.8	99.9	99.8	0.17

Project:		ETAP		Page:	17
Location:		20.6.0C		Date:	04-18-2023
Contract:				SN:	KIEWITRWN9
Engineer:				Revision:	Base
Filename:	GE-Southern		Study Case: LF NL HV	Config.:	Normal

Branch ID	From-To Bus Flow		To-From Bus Flow		Losses		% Bus Voltage		Vd % Drop
	MW	Mvar	MW	Mvar	kW	kvar	From	To	in Vmag
DCC2 FEEDER	1.566	0.640	-1.564	-0.638	1.9	2.8	99.9	99.8	0.17
Linde 1 Feeder	36.874	22.859	-36.867	-22.848	7.1	10.6	99.3	99.2	0.03
					454.2	11215.7			

* This Transmission Line includes Series Capacitor.

Project:		ETAP		Page:	18
Location:		20.6.0C		Date:	04-18-2023
Contract:				SN:	KIEWITRWN9
Engineer:				Revision:	Base
Filename:	GE-Southern	Study Case: LF NL HV		Config.:	Normal

Alert Summary Report

% Alert Settings

	Critical	Marginal
Loading		
Bus	100.0	98.0
Cable / Busway	100.0	98.0
Reactor	100.0	98.0
Line	100.0	98.0
Transformer	100.0	98.0
Panel	100.0	98.0
Protective Device	100.0	98.0
Generator	100.0	98.0
Inverter/Charger	100.0	98.0
Bus Voltage		
OverVoltage	105.0	102.0
UnderVoltage	95.0	98.0
Generator Excitation		
OverExcited (Q Max.)	100.0	95.0
UnderExcited (Q Min.)	100.0	

Marginal Report

Device ID	Type	Condition	Rating/Limit	Unit	Operating	% Operating	Phase Type
6Z-LVB-MCC-121	Bus	Under Voltage	0.480	kV	0.467	97.3	3-Phase
6Z-LVB-MCC-122	Bus	Under Voltage	0.480	kV	0.467	97.3	3-Phase
6Z-LVB-MCC-123	Bus	Under Voltage	0.480	kV	0.467	97.4	3-Phase
6Z-LVB-MCC-221	Bus	Under Voltage	0.480	kV	0.468	97.5	3-Phase
6Z-LVB-MCC-222	Bus	Under Voltage	0.480	kV	0.468	97.5	3-Phase
6Z-LVB-SWG-12	Bus	Under Voltage	0.480	kV	0.468	97.5	3-Phase
6Z-LVB-SWG-22	Bus	Under Voltage	0.480	kV	0.469	97.7	3-Phase
Bus18	Bus	Over Voltage	4.000	kV	4.163	104.1	3-Phase
Bus2	Bus	Over Voltage	4.000	kV	4.160	104.0	3-Phase
Bus20	Bus	Over Voltage	4.000	kV	4.163	104.1	3-Phase
Bus21	Bus	Over Voltage	4.000	kV	4.162	104.1	3-Phase
Bus22	Bus	Over Voltage	4.000	kV	4.162	104.0	3-Phase
Bus23	Bus	Over Voltage	4.000	kV	4.162	104.0	3-Phase
Bus24	Bus	Over Voltage	4.000	kV	4.161	104.0	3-Phase
Bus25	Bus	Over Voltage	4.000	kV	4.161	104.0	3-Phase

Project:		ETAP		Page:	19
Location:		20.6.0C		Date:	04-18-2023
Contract:				SN:	KIEWITRWN9
Engineer:				Revision:	Base
Filename:	GE-Southern		Study Case: LF NL HV	Config.:	Normal

Marginal Report

Device ID	Type	Condition	Rating/Limit	Unit	Operating	% Operating	Phase Type
Bus26	Bus	Over Voltage	4.000	kV	4.162	104.1	3-Phase
Bus28	Bus	Over Voltage	13.200	kV	13.690	103.7	3-Phase
Bus29	Bus	Over Voltage	4.000	kV	4.162	104.1	3-Phase
Bus43	Bus	Over Voltage	4.000	kV	4.160	104.0	3-Phase
Bus6	Bus	Over Voltage	13.200	kV	13.690	103.7	3-Phase
FIRE PUMP TAP BUS	Bus	Under Voltage	0.480	kV	0.468	97.5	3-Phase
HV BUS	Bus	Over Voltage	230.000	kV	239.890	104.3	3-Phase
SUS 12 Secondary	Bus	Under Voltage	0.480	kV	0.469	97.7	3-Phase
SUS 22 SECONDARY	Bus	Under Voltage	0.480	kV	0.470	97.9	3-Phase

SUMMARY OF TOTAL GENERATION, LOADING & DEMAND

	MW	Mvar	MVA	% PF
Source (Swing Buses):	54.921	42.295	69.320	79.23 Lagging
Source (Non-Swing Buses):	0.000	0.000	0.000	
Total Demand:	54.921	42.295	69.320	79.23 Lagging
Total Motor Load:	52.705	30.348	60.817	86.66 Lagging
Total Static Load:	1.763	0.731	1.908	92.36 Lagging
Total Constant I Load:	0.000	0.000	0.000	
Total Generic Load:	0.000	0.000	0.000	
Apparent Losses:	0.454	11.216		
System Mismatch:	0.000	0.000		

Number of Iterations: 3

Project:	ETAP	Page:	1
Location:	20.6.0C	Date:	04-18-2023
Contract:		SN:	KIEWITRWN9
Engineer:	Study Case: LF LL HV	Revision:	Base
Filename: GE-Southern		Config.:	Normal

Electrical Transient Analyzer Program

Load Flow Analysis

Loading Category (3): LIGHT

Generation Category (1): MAXV

Load Diversity Factor: Global

Constant kVA=0%, Constant Z=100%, Generic=100%, Constant I=100%

	Swing	V-Control	Load	Total
Number of Buses:	1	0	37	38

	XFMR2	XFMR3	Reactor	Line/Cable/ Busway	Impedance	Tie PD	Total
Number of Branches:	5	0	0	31	0	1	37

Method of Solution:	Adaptive Newton-Raphson Method
Maximum No. of Iteration:	99
Precision of Solution:	0.0001000
System Frequency:	60.00 Hz
Unit System:	English
Project Filename:	GE-Southern
Output Filename:	\\kiewitplaza\kegi\Data\ES\20041223-FOA2515_GE_Southern_Linde_Advanced_NGCC_Integration\ENG\Engineering\Elec_Controls\Calcs\ETAP\GE-Southern\LF-7.lfr

Project:		ETAP		Page:	2
Location:		20.6.0C		Date:	04-18-2023
Contract:				SN:	KIEWITRWN9
Engineer:				Revision:	Base
Filename:	GE-Southern		Study Case: LF LL HV	Config.:	Normal

Adjustments

Tolerance	Apply Adjustments	Individual /Global	Percent
Transformer Impedance:	Yes	Individual	
Reactor Impedance:	Yes	Individual	
Overload Heater Resistance:	No		
Transmission Line Length:	Yes	Individual	
Cable / Busway Length:	Yes	Individual	

Temperature Correction	Apply Adjustments	Individual /Global	Degree C
Transmission Line Resistance:	Yes	Individual	
Cable / Busway Resistance:	Yes	Individual	

Project:	**ETAP**	Page:	3
Location:	20.6.0C	Date:	04-18-2023
Contract:		SN:	KIEWITRWN9
Engineer:		Revision:	Base
Filename: GE-Southern	Study Case: LF LL HV	Config.:	Normal

Bus Input Data

Bus			Initial Voltage		Load							
					Constant kVA		Constant Z		Constant I		Generic	
ID	kV	Sub-sys	% Mag.	Ang.	MW	Mvar	MW	Mvar	MW	Mvar	MW	Mvar
6Z-LVB-MCC-121	0.480	1	100.0	0.0								
6Z-LVB-MCC-122	0.480	1	100.0	0.0								
6Z-LVB-MCC-123	0.480	1	100.0	0.0								
6Z-LVB-MCC-221	0.480	1	100.0	0.0								
6Z-LVB-MCC-222	0.480	1	100.0	0.0								
6Z-LVB-SWG-12	0.480	1	100.0	0.0								
6Z-LVB-SWG-22	0.480	1	100.0	0.0								
6Z-MVA-SWG-1	13.800	1	100.0	0.0								
6Z-MVA-SWG-2	13.800	1	100.0	0.0								
6Z-MVC-SWG-11	4.160	1	100.0	0.0								
6Z-MVC-SWG-21	4.160	1	100.0	0.0								
Bus2	4.000	1	100.0	0.0								
Bus6	13.200	1	100.0	0.0								
Bus7	13.800	1	100.0	0.0								
Bus8	4.160	1	100.0	0.0								
Bus9	4.160	1	100.0	0.0								
Bus18	4.000	1	100.0	0.0								
Bus20	4.000	1	100.0	0.0								
Bus21	4.000	1	100.0	0.0								
Bus22	4.000	1	100.0	0.0								
Bus23	4.000	1	100.0	0.0								
Bus24	4.000	1	100.0	0.0								
Bus25	4.000	1	100.0	0.0								
Bus26	4.000	1	100.0	0.0								
Bus28	13.200	1	100.0	0.0								
Bus29	4.000	1	100.0	0.0								
Bus43	4.000	1	100.0	0.0								
FIRE PUMP TAP BUS	0.480	1	100.0	0.0								
HV BUS	230.000	1	104.3	0.0								
MPT X WINDING	13.800	1	100.0	0.0								
SUS 11 Primary	13.800	1	100.0	0.0								
SUS 11 Secondary	4.160	1	100.0	0.0								
SUS 12 Primary	13.800	1	100.0	0.0								

Project:	ETAP	Page:	4
Location:	20.6.0C	Date:	04-18-2023
Contract:		SN:	KIEWITRWN9
Engineer:		Revision:	Base
Filename: GE-Southern	Study Case: LF LL HV	Config.:	Normal

Bus			Initial Voltage		Load							
					Constant kVA		Constant Z		Constant I		Generic	
ID	kV	Sub-sys	% Mag.	Ang.	MW	Mvar	MW	Mvar	MW	Mvar	MW	Mvar
SUS 12 Secondary	0.480	1	100.0	0.0								
SUS 21 PRIMARY	13.800	1	100.0	0.0								
SUS 21 SECONDARY	4.160	1	100.0	0.0								
SUS 22 PRIMARY	13.800	1	100.0	0.0								
SUS 22 SECONDARY	0.480	1	100.0	0.0								
Total Number of Buses: 38					0.000	0.000	0.000	0.000	0.000	0.000	0.000	0.000

Generation Bus				Voltage		Generation			Mvar Limits	
ID	kV	Type	Sub-sys	% Mag.	Angle	MW	Mvar	% PF	Max	Min
HV BUS	230.000	Swing	1	104.3	0.0					
						0.000	0.000			

Project:		ETAP		Page:	5
Location:		20.6.0C		Date:	04-18-2023
Contract:				SN:	KIEWITRWN9
Engineer:				Revision:	Base
Filename:	GE-Southern	Study Case: LF LL HV		Config.:	Normal

Line/Cable/Busway Input Data

ohms or siemens/1000 ft per Conductor (Cable) or per Phase (Line/Busway)

Line/Cable/Busway ID	Library	Size	Length Adj. (ft)	Length % Tol.	#/Phase	T (°C)	R	X	Y
6Z-CWS-MFN-01A-100	5.0NCUS1	1/0	800.0	0.0	1	75	0.127806	0.098000	
6Z-CWS-MFN-01B-100	5.0NCUS1	1/0	800.0	0.0	1	75	0.127806	0.098000	
6Z-CWS-MFN-01C-100	5.0NCUS1	1/0	850.0	0.0	1	75	0.127806	0.098000	
6Z-CWS-MFN-01D-100	5.0NCUS1	1/0	850.0	0.0	1	75	0.127806	0.098000	
6Z-CWS-MFN-01E-100	5.0NCUS1	1/0	900.0	0.0	1	75	0.127806	0.098000	
6Z-CWS-MFN-01F-100	5.0NCUS1	1/0	900.0	0.0	1	75	0.127806	0.098000	
6Z-CWS-MFN-01G-100	5.0NCUS1	1/0	950.0	0.0	1	75	0.127806	0.098000	
6Z-CWS-MFN-01H-100	5.0NCUS1	1/0	950.0	0.0	1	75	0.127806	0.098000	
6Z-CWS-MFN-01I-100	5.0NCUS1	1/0	1100.0	0.0	1	75	0.127806	0.098000	
6Z-CWS-MFN-01J-100	5.0NCUS1	1/0	1100.0	0.0	1	75	0.127806	0.098000	
6Z-CWS-MPM-01A-100	15NCUS1	500	500.0	0.0	1	75	0.033382	0.079000	
6Z-CWS-MPM-01B-100	15NCUS1	500	500.0	0.0	1	75	0.033382	0.079000	
6Z-CWS-MPM-02-100	5.0NCUS1	1/0	500.0	0.0	1	75	0.127806	0.098000	
6Z-LVB-BUS-22	0.6NCUN1	750	50.0	0.0	9	75	0.019400	0.035600	
6Z-LVB-MCC-121-200	0.6NCUN1	500	50.0	0.0	5	75	0.027000	0.039600	
6Z-LVB-MCC-122-200	0.6NCUN1	500	50.0	0.0	5	75	0.027000	0.039600	
6Z-LVB-MCC-123-200	0.6NCUN1	500	50.0	0.0	5	75	0.027000	0.039600	
6Z-LVB-MCC-221-200	0.6NCUN1	500	50.0	0.0	5	75	0.027600	0.037300	
6Z-LVB-MCC-222-200	0.6NCUN1	500	50.0	0.0	5	75	0.027600	0.037300	
6Z-MVA-BUS-1	15NCUN1	750	100.0	0.0	5	75	0.018503	0.034000	
6Z-MVA-BUS-12	0.6NCUN1	750	50.0	0.0	9	75	0.019000	0.038400	
6Z-MVA-SWG-2-100	15NCUS1	500	1500.0	0.0	1	75	0.033382	0.079000	
6Z-MVA-SWG-21-100	5.0NCUS3	500	50.0	0.0	3	75	0.028400	0.035100	
6Z-MVC-SWG-11-100	5.0NCUS1	500	50.0	0.0	3	75	0.026222	0.061417	
6Z-SUS-XFR-11-100	15NCUS1	500	50.0	0.0	1	75	0.028400	0.042100	
6Z-SUS-XFR-12-100	5.0NCUS1	350	50.0	0.0	1	75	0.037095	0.063246	
6Z-SUS-XFR-21-100	15NCUS1	500	50.0	0.0	1	75	0.033382	0.079000	
6Z-SUS-XFR-22-100	5.0NCUS3	500	100.0	0.0	1	75	0.028400	0.035100	
DCC1 FEEDER	5.0NCUS1	500	400.0	0.0	1	75	0.028400	0.042100	
DCC2 FEEDER	5.0NCUS1	500	400.0	0.0	1	75	0.028400	0.042100	
Linde 1 Feeder	15NCUS1	500	250.0	0.0	10	75	0.028400	0.042100	

Line / Cable / Busway resistances are listed at the specified temperatures.

Project:	ETAP	Page:	6
Location:	20.6.0C	Date:	04-18-2023
Contract:		SN:	KIEWITRWN9
Engineer:		Revision:	Base
Filename: GE-Southern	Study Case: LF LL HV	Config.:	Normal

2-Winding Transformer Input Data

Transformer		Rating					Z Variation			% Tap Setting		Adjusted	Phase Shift	
ID	Phase	MVA	Prim. kV	Sec. kV	% Z1	X1/R1	+ 5%	- 5%	% Tol.	Prim.	Sec.	% Z	Type	Angle
6Z-MPT-XFR-1	3-Phase	43.000	230.000	13.800	10.50	29.50	0	0	7.5	0	0	11.2875	Dyn	0.000
6Z-SUS-XFR-11	3-Phase	7.000	13.800	4.160	6.50	13.55	0	0	7.5	-2.500	0	6.9875	Dyn	0.000
6Z-SUS-XFR-12	3-Phase	2.500	13.800	0.480	5.75	10.67	0	0	7.5	-2.500	0	6.1813	Dyn	0.000
6Z-SUS-XFR-21	3-Phase	7.000	13.800	4.160	6.50	13.55	0	0	7.5	-2.500	0	6.9875	Dyn	0.000
6Z-SUS-XFR-22	3-Phase	2.500	13.800	0.480	5.75	10.67	0	0	7.5	-2.500	0	6.1813	Dyn	0.000

2-Winding Transformer Load Tap Changer (LTC) Settings

Transformer	Connected Buses ("*" LTC Side)		Transformer Load Tap Changer Setting					
ID	Primary Bus ID	Secondary Bus ID	% Min. Tap	% Max. Tap	% Step	Regulated Bus ID	% V	kV
6Z-MPT-XFR-1	* IIV BUS	MPT X WINDING	-10.00	10.00	0.625	MPT X WINDING	100.00	13.800

Project:	ETAP	Page:	7
Location:	20.6.0C	Date:	04-18-2023
Contract:		SN:	KIEWITRWN9
Engineer:	Study Case: LF LL HV	Revision:	Base
Filename: GE-Southern		Config.:	Normal

Branch Connections

CKT/Branch		Connected Bus ID		% Impedance, Pos. Seq., 100 MVA Base			
ID	Type	From Bus	To Bus	R	X	Z	Y
6Z-MPT-XFR-1	2W XFMR	HV BUS	MPT X WINDING	0.89	26.23	26.25	
6Z-SUS-XFR-11	2W XFMR	SUS 11 Primary	SUS 11 Secondary	7.16	97.06	97.33	
6Z-SUS-XFR-12	2W XFMR	SUS 12 Primary	SUS 12 Secondary	22.49	240.02	241.07	
6Z-SUS-XFR-21	2W XFMR	SUS 21 PRIMARY	SUS 21 SECONDARY	7.16	97.06	97.33	
6Z-SUS-XFR-22	2W XFMR	SUS 22 PRIMARY	SUS 22 SECONDARY	22.49	240.02	241.07	
6Z-CWS-MFN-01A-100	Cable	6Z-MVC-SWG-11	Bus18	59.08	45.30	74.45	
6Z-CWS-MFN-01B-100	Cable	6Z-MVC-SWG-11	Bus20	59.08	45.30	74.45	
6Z-CWS-MFN-01C-100	Cable	6Z-MVC-SWG-11	Bus21	62.77	48.13	79.10	
6Z-CWS-MFN-01D-100	Cable	6Z-MVC-SWG-11	Bus26	62.77	48.13	79.10	
6Z-CWS-MFN-01E-100	Cable	6Z-MVC-SWG-11	Bus22	66.47	50.97	83.76	
6Z-CWS-MFN-01F-100	Cable	6Z-MVC-SWG-11	Bus23	66.47	50.97	83.76	
6Z-CWS-MFN-01G-100	Cable	6Z-MVC-SWG-11	Bus24	70.16	53.80	88.41	
6Z-CWS-MFN-01H-100	Cable	6Z-MVC-SWG-11	Bus25	70.16	53.80	88.41	
6Z-CWS-MFN-01I-100	Cable	6Z-MVC-SWG-11	Bus43	81.24	62.29	102.37	
6Z-CWS-MFN-01J-100	Cable	6Z-MVC-SWG-11	Bus2	81.24	62.29	102.37	
6Z-CWS-MPM-01A-100	Cable	6Z-MVA-SWG-1	Bus6	0.88	2.07	2.25	
6Z-CWS-MPM-01B-100	Cable	6Z-MVA-SWG-1	Bus28	0.88	2.07	2.25	
6Z-CWS-MPM-02-100	Cable	6Z-MVC-SWG-11	Bus29	36.93	28.31	46.53	
6Z-LVB-BUS-22	Cable	SUS 22 SECONDARY	6Z-LVB-SWG-22	4.68	8.58	9.78	
6Z-LVB-MCC-121-200	Cable	6Z-LVB-SWG-12	6Z-LVB-MCC-121	11.72	17.19	20.80	
6Z-LVB-MCC-122-200	Cable	6Z-LVB-SWG-12	6Z-LVB-MCC-122	11.72	17.19	20.80	
6Z-LVB-MCC-123-200	Cable	6Z-LVB-SWG-12	6Z-LVB-MCC-123	11.72	17.19	20.80	
6Z-LVB-MCC-221-200	Cable	6Z-LVB-SWG-22	6Z-LVB-MCC-221	11.98	16.19	20.14	
6Z-LVB-MCC-222-200	Cable	6Z-LVB-SWG-22	6Z-LVB-MCC-222	11.98	16.19	20.14	
6Z-MVA-BUS-1	Cable	MPT X WINDING	6Z-MVA-SWG-1	0.02	0.04	0.04	
6Z-MVA-BUS-12	Cable	SUS 12 Secondary	FIRE PUMP TAP BUS	4.58	9.26	10.33	
6Z-MVA-SWG-2-100	Cable	6Z-MVA-SWG-1	6Z-MVA-SWG-2	2.63	6.22	6.76	
6Z-MVA-SWG-21-100	Cable	SUS 21 SECONDARY	6Z-MVC-SWG-21	0.27	0.34	0.43	
6Z-MVC-SWG-11-100	Cable	SUS 11 Secondary	6Z-MVC-SWG-11	0.25	0.59	0.64	
6Z-SUS-XFR-11-100	Cable	6Z-MVA-SWG-1	SUS 11 Primary	0.07	0.11	0.13	
6Z-SUS-XFR-12-100	Cable	6Z-MVA-SWG-1	SUS 12 Primary	0.10	0.17	0.19	
6Z-SUS-XFR-21-100	Cable	6Z-MVA-SWG-2	SUS 21 PRIMARY	0.09	0.21	0.23	
6Z-SUS-XFR-22-100	Cable	6Z-MVA-SWG-2	SUS 22 PRIMARY	0.15	0.18	0.24	
DCC1 FEEDER	Cable	6Z-MVC-SWG-21	Bus8	6.56	9.73	11.74	
DCC2 FEEDER	Cable	6Z-MVC-SWG-21	Bus9	6.56	9.73	11.74	
Linde 1 Feeder	Cable	6Z-MVA-SWG-1	Bus7	0.04	0.06	0.07	

Project:		ETAP		Page:	8
Location:		20.6.0C		Date:	04-18-2023
Contract:				SN:	KIEWITRWN9
Engineer:				Revision:	Base
Filename:	GE-Southern		Study Case: LF LL HV	Config.:	Normal

CKT/Branch		Connected Bus ID		% Impedance, Pos. Seq., 100 MVA Base			
ID	Type	From Bus	To Bus	R	X	Z	Y
CB12	Tie Breakr	FIRE PUMP TAP BUS	6Z-LVB-SWG-12				

Project:	ETAP	Page:	9
Location:	20.6.0C	Date:	04-18-2023
Contract:		SN:	KIEWITRWN9
Engineer:		Revision:	Base
Filename: GE-Southern	Study Case: LF LL HV	Config.:	Normal

LOAD FLOW REPORT

Bus		Voltage		Generation		Load		Load Flow					XFMR
ID	kV	% Mag.	Ang.	MW	Mvar	MW	Mvar	ID	MW	Mvar	Amp	%PF	%Tap
6Z-LVB-MCC-121	0.480	103.108	0.0	0.000	0.000	0.000	0.000	6Z-LVB-SWG-12	0.000	0.000	0.0	0.0	
6Z-LVB-MCC-122	0.480	103.108	0.0	0.000	0.000	0.000	0.000	6Z-LVB-SWG-12	0.000	0.000	0.0	0.0	
6Z-LVB-MCC-123	0.480	103.108	0.0	0.000	0.000	0.000	0.000	6Z-LVB-SWG-12	0.000	0.000	0.0	0.0	
6Z-LVB-MCC-221	0.480	103.108	0.0	0.000	0.000	0.000	0.000	6Z-LVB-SWG-22	0.000	0.000	0.0	0.0	
6Z-LVB-MCC-222	0.480	103.108	0.0	0.000	0.000	0.000	0.000	6Z-LVB-SWG-22	0.000	0.000	0.0	0.0	
6Z-LVB-SWG-12	0.480	103.108	0.0	0.000	0.000	0.000	0.000	6Z-LVB-MCC-121	0.000	0.000	0.0	0.0	
								6Z-LVB-MCC-122	0.000	0.000	0.0	0.0	
								6Z-LVB-MCC-123	0.000	0.000	0.0	0.0	
								FIRE PUMP TAP BUS	0.000	0.000	0.0	0.0	
6Z-LVB-SWG-22	0.480	103.108	0.0	0.000	0.000	0.000	0.000	SUS 22 SECONDARY	0.000	0.000	0.0	0.0	
								6Z-LVB-MCC-221	0.000	0.000	0.0	0.0	
								6Z-LVB-MCC-222	0.000	0.000	0.0	0.0	
6Z-MVA-SWG-1	13.800	100.530	0.0	0.000	0.000	0.000	0.000	Bus6	0.000	0.000	0.0	0.0	
								Bus28	0.000	0.000	0.0	0.0	
								MPT X WINDING	0.000	0.000	0.0	0.0	
								6Z-MVA-SWG-2	0.000	0.000	0.0	0.0	
								SUS 11 Primary	0.000	0.000	0.0	0.0	
								SUS 12 Primary	0.000	0.000	0.0	0.0	
								Bus7	0.000	0.000	0.0	0.0	
6Z-MVA-SWG-2	13.800	100.530	0.0	0.000	0.000	0.000	0.000	6Z-MVA-SWG-1	0.000	0.000	0.0	0.0	
								SUS 21 PRIMARY	0.000	0.000	0.0	0.0	
								SUS 22 PRIMARY	0.000	0.000	0.0	0.0	
6Z-MVC-SWG-11	4.160	103.108	0.0	0.000	0.000	0.000	0.000	Bus18	0.000	0.000	0.0	0.0	
								Bus20	0.000	0.000	0.0	0.0	
								Bus21	0.000	0.000	0.0	0.0	
								Bus26	0.000	0.000	0.0	0.0	
								Bus22	0.000	0.000	0.0	0.0	
								Bus23	0.000	0.000	0.0	0.0	
								Bus24	0.000	0.000	0.0	0.0	
								Bus25	0.000	0.000	0.0	0.0	
								Bus43	0.000	0.000	0.0	0.0	

Project:		ETAP		Page:	10
Location:		20.6.0C		Date:	04-18-2023
Contract:				SN:	KIEWITRWN9
Engineer:				Revision:	Base
Filename:	GE-Southern		Study Case: LF LL HV	Config.:	Normal

Bus		Voltage		Generation		Load		Load Flow					XFMR
ID	kV	% Mag.	Ang.	MW	Mvar	MW	Mvar	ID	MW	Mvar	Amp	%PF	%Tap
								Bus2	0.000	0.000	0.0	0.0	
								Bus29	0.000	0.000	0.0	0.0	
								SUS 11 Secondary	0.000	0.000	0.0	0.0	
6Z-MVC-SWG-21	4.160	103.108	0.0	0.000	0.000	0.000	0.000	SUS 21 SECONDARY	0.000	0.000	0.0	0.0	
								Bus8	0.000	0.000	0.0	0.0	
								Bus9	0.000	0.000	0.0	0.0	
Bus2	4.000	107.232	0.0	0.000	0.000	0.000	0.000	6Z-MVC-SWG-11	0.000	0.000	0.0	0.0	
Bus6	13.200	105.100	0.0	0.000	0.000	0.000	0.000	6Z-MVA-SWG-1	0.000	0.000	0.0	0.0	
Bus7	13.800	100.530	0.0	0.000	0.000	0.000	0.000	6Z-MVA-SWG-1	0.000	0.000	0.0	0.0	
Bus8	4.160	103.108	0.0	0.000	0.000	0.000	0.000	6Z-MVC-SWG-21	0.000	0.000	0.0	0.0	
Bus9	4.160	103.108	0.0	0.000	0.000	0.000	0.000	6Z-MVC-SWG-21	0.000	0.000	0.0	0.0	
Bus18	4.000	107.232	0.0	0.000	0.000	0.000	0.000	6Z-MVC-SWG-11	0.000	0.000	0.0	0.0	
Bus20	4.000	107.232	0.0	0.000	0.000	0.000	0.000	6Z-MVC-SWG-11	0.000	0.000	0.0	0.0	
Bus21	4.000	107.232	0.0	0.000	0.000	0.000	0.000	6Z-MVC-SWG-11	0.000	0.000	0.0	0.0	
Bus22	4.000	107.232	0.0	0.000	0.000	0.000	0.000	6Z-MVC-SWG-11	0.000	0.000	0.0	0.0	
Bus23	4.000	107.232	0.0	0.000	0.000	0.000	0.000	6Z-MVC-SWG-11	0.000	0.000	0.0	0.0	
Bus24	4.000	107.232	0.0	0.000	0.000	0.000	0.000	6Z-MVC-SWG-11	0.000	0.000	0.0	0.0	
Bus25	4.000	107.232	0.0	0.000	0.000	0.000	0.000	6Z-MVC-SWG-11	0.000	0.000	0.0	0.0	
Bus26	4.000	107.232	0.0	0.000	0.000	0.000	0.000	6Z-MVC-SWG-11	0.000	0.000	0.0	0.0	
Bus28	13.200	105.100	0.0	0.000	0.000	0.000	0.000	6Z-MVA-SWG-1	0.000	0.000	0.0	0.0	
Bus29	4.000	107.232	0.0	0.000	0.000	0.000	0.000	6Z-MVC-SWG-11	0.000	0.000	0.0	0.0	
Bus43	4.000	107.232	0.0	0.000	0.000	0.000	0.000	6Z-MVC-SWG-11	0.000	0.000	0.0	0.0	
FIRE PUMP TAP BUS	0.480	103.108	0.0	0.000	0.000	0.000	0.000	SUS 12 Secondary	0.000	0.000	0.0	0.0	
								6Z-LVB-SWG-12	0.000	0.000	0.0	0.0	
* IIV BUS	230.000	104.300	0.0	0.000	0.000	0.000	0.000	MPT X WINDING	0.000	0.000	0.0	0.0	3.750
MPT X WINDING	13.800	100.530	0.0	0.000	0.000	0.000	0.000	6Z-MVA-SWG-1	0.000	0.000	0.0	0.0	
								IIV BUS	0.000	0.000	0.0	0.0	
SUS 11 Primary	13.800	100.530	0.0	0.000	0.000	0.000	0.000	6Z-MVA-SWG-1	0.000	0.000	0.0	0.0	
								SUS 11 Secondary	0.000	0.000	0.0	0.0	-2.500
SUS 11 Secondary	4.160	103.108	0.0	0.000	0.000	0.000	0.000	6Z-MVC-SWG-11	0.000	0.000	0.0	0.0	
								SUS 11 Primary	0.000	0.000	0.0	0.0	
SUS 12 Primary	13.800	100.530	0.0	0.000	0.000	0.000	0.000	6Z-MVA-SWG-1	0.000	0.000	0.0	0.0	
								SUS 12 Secondary	0.000	0.000	0.0	0.0	-2.500

Project:		ETAP		Page:	11
Location:		20.6.0C		Date:	04-18-2023
Contract:				SN:	KIEWITRWN9
Engineer:				Revision:	Base
Filename:	GE-Southern		Study Case: LF LL HV	Config.:	Normal

Bus		Voltage		Generation		Load		Load Flow					XFMR
ID	kV	% Mag.	Ang.	MW	Mvar	MW	Mvar	ID	MW	Mvar	Amp	%PF	%Tap
SUS 12 Secondary	0.480	103.108	0.0	0.000	0.000	0.000	0.000	FIRE PUMP TAP BUS	0.000	0.000	0.0	0.0	
								SUS 12 Primary	0.000	0.000	0.0	0.0	
SUS 21 PRIMARY	13.800	100.530	0.0	0.000	0.000	0.000	0.000	6Z-MVA-SWG-2	0.000	0.000	0.0	0.0	
								SUS 21 SECONDARY	0.000	0.000	0.0	0.0	-2.500
SUS 21 SECONDARY	4.160	103.108	0.0	0.000	0.000	0.000	0.000	6Z-MVC-SWG-21	0.000	0.000	0.0	0.0	
								SUS 21 PRIMARY	0.000	0.000	0.0	0.0	
SUS 22 PRIMARY	13.800	100.530	0.0	0.000	0.000	0.000	0.000	6Z-MVA-SWG-2	0.000	0.000	0.0	0.0	
								SUS 22 SECONDARY	0.000	0.000	0.0	0.0	-2.500
SUS 22 SECONDARY	0.480	103.108	0.0	0.000	0.000	0.000	0.000	6Z-LVB-SWG-22	0.000	0.000	0.0	0.0	
								SUS 22 PRIMARY	0.000	0.000	0.0	0.0	

* Indicates a voltage regulated bus (voltage controlled or swing type machine connected to it)

# Indicates a bus with a load mismatch of more than 0.1 MVA

Project:	ETAP	Page:	12
Location:	20.6.0C	Date:	04-18-2023
Contract:		SN:	KIEWITRWN9
Engineer:	Study Case: LF LL HV	Revision:	Base
Filename: GE-Southern		Config.:	Normal

Bus Loading Summary Report

Bus			Directly Connected Load								Total Bus Load			
			Constant kVA		Constant Z		Constant I		Generic					Percent
ID	kV	Rated Amp	MW	Mvar	MW	Mvar	MW	Mvar	MW	Mvar	MVA	% PF	Amp	Loading
6Z-LVB-MCC-121	0.480	1600.0												
6Z-LVB-MCC-122	0.480	1600.0												
6Z-LVB-MCC-123	0.480	1600.0												
6Z-LVB-MCC-221	0.480	1600.0												
6Z-LVB-MCC-222	0.480	1600.0												
6Z-LVB-SWG-12	0.480	4000.0												
6Z-LVB-SWG-22	0.480	4000.0											-	-
6Z-MVA-SWG-1	13.800	3000.0											-	-
6Z-MVA-SWG-2	13.800	1200.0											-	-
6Z-MVC-SWG-11	4.160	1200.0											-	-
6Z-MVC-SWG-21	4.160	1200.0											-	-
Bus2	4.000													
Bus6	13.200													
Bus7	13.800													
Bus8	4.160												-	
Bus9	4.160												-	
Bus18	4.000													
Bus20	4.000													
Bus21	4.000													
Bus22	4.000													
Bus23	4.000													
Bus24	4.000													
Bus25	4.000													
Bus26	4.000													
Bus28	13.200													
Bus29	4.000													
Bus43	4.000													
FIRE PUMP TAP BUS	0.480													
HV BUS	230.000													
MPT X WINDING	13.800												-	
SUS 11 Primary	13.800												-	
SUS 11 Secondary	4.160												-	
SUS 12 Primary	13.800													
SUS 12 Secondary	0.480												-	
SUS 21 PRIMARY	13.800												-	
SUS 21 SECONDARY	4.160													
SUS 22 PRIMARY	13.800													
SUS 22 SECONDARY	0.480												-	

Project:		ETAP		Page:	13
Location:		20.6.0C		Date:	04-18-2023
Contract:				SN:	KIEWITRWN9
Engineer:				Revision:	Base
Filename:	GE-Southern	Study Case: LF LL HV		Config.:	Normal

Bus			Directly Connected Load								Total Bus Load			
			Constant kVA		Constant Z		Constant I		Generic					
ID	kV	Rated Amp	MW	Mvar	MW	Mvar	MW	Mvar	MW	Mvar	MVA	% PF	Amp	Percent Loading

* Indicates operating load of a bus exceeds the bus critical limit (100.0% of the Continuous Ampere rating).
\# Indicates operating load of a bus exceeds the bus marginal limit (98.0% of the Continuous Ampere rating).

Project:		ETAP		Page:	14
Location:		20.6.0C		Date:	04-18-2023
Contract:				SN:	KIEWITRWN9
Engineer:				Revision:	Base
Filename:	GE-Southern	Study Case: LF LL HV		Config.:	Normal

Branch Loading Summary Report

CKT / Branch		Busway / Cable & Reactor			Transformer				
		Ampacity	Loading		Capability	Loading (input)		Loading (output)	
ID	Type	(Amp)	Amp	%	(MVA)	MVA	%	MVA	%
6Z-CWS-MFN-01A-100	Cable	124.58							
6Z-CWS-MFN-01B-100	Cable	124.58							
6Z-CWS-MFN-01C-100	Cable	124.58							
6Z-CWS-MFN-01D-100	Cable	124.58							
6Z-CWS-MFN-01E-100	Cable	124.58							
6Z-CWS-MFN-01F-100	Cable	124.58							
6Z-CWS-MFN-01G-100	Cable	124.58							
6Z-CWS-MFN-01H-100	Cable	124.58							
6Z-CWS-MFN-01I-100	Cable	124.58	0.00	0.00					
6Z-CWS-MFN-01J-100	Cable	124.58	0.00	0.00					
6Z-CWS-MPM-01A-100	Cable	448.89	0.00	0.00					
6Z-CWS-MPM-01B-100	Cable	448.89	0.00	0.00					
6Z-CWS-MPM-02-100	Cable	124.58							
6Z-LVB-BUS-22	Cable	5043.36	0.00	0.00					
6Z-LVB-MCC-121-200	Cable	1965.13	0.00	0.00					
6Z-LVB-MCC-122-200	Cable	1965.13	0.00	0.00					
6Z-LVB-MCC-123-200	Cable	1965.13	0.00	0.00					
6Z-LVB-MCC-221-200	Cable	1943.66							
6Z-LVB-MCC-222-200	Cable	1943.66							
6Z-MVA-BUS-1	Cable	3294.23	0.00	0.00					
6Z-MVA-BUS-12	Cable	5096.18	0.00	0.00					
6Z-MVA-SWG-2-100	Cable	448.89	0.00	0.00					
6Z-MVA-SWG-21-100	Cable	1161.03	0.00	0.00					
6Z-MVC-SWG-11-100	Cable	1730.77	0.00	0.00					
6Z-SUS-XFR-11-100	Cable	514.72	0.00	0.00					
6Z-SUS-XFR-12-100	Cable	437.12	0.00	0.00					
6Z-SUS-XFR-21-100	Cable	448.89	0.00	0.00					
6Z-SUS-XFR-22-100	Cable	387.01	0.00	0.00					
DCC1 FEEDER	Cable	444.45	0.00	0.00					
DCC2 FEEDER	Cable	444.45	0.00	0.00					
Linde 1 Feeder	Cable	5147.16	0.00	0.00					
6Z-MPT-XFR-1	Transformer				71.668				
6Z-SUS-XFR-11	Transformer				8.750				

Project:		ETAP		Page:	15
Location:		20.6.0C		Date:	04-18-2023
Contract:				SN:	KIEWITRWN9
Engineer:				Revision:	Base
Filename:	GE-Southern	Study Case: LF LL HV		Config.:	Normal

CKT / Branch		Busway / Cable & Reactor			Transformer				
						Loading (input)		Loading (output)	
ID	Type	Ampacity (Amp)	Loading Amp	%	Capability (MVA)	MVA	%	MVA	%
6Z-SUS-XFR-12	Transformer				3.333				
6Z-SUS-XFR-21	Transformer				8.750				
6Z-SUS-XFR-22	Transformer				3.333				

* Indicates a branch with operating load exceeding the branch capability.

Project:		ETAP		Page:	16
Location:		20.6.0C		Date:	04-18-2023
Contract:				SN:	KIEWITRWN9
Engineer:				Revision:	Base
Filename:	GE-Southern		Study Case: LF LL HV	Config.:	Normal

Branch Losses Summary Report

	From-To Bus Flow		To-From Bus Flow		Losses		% Bus Voltage		Vd % Drop
Branch ID	MW	Mvar	MW	Mvar	kW	kvar	From	To	in Vmag
6Z-CWS-MFN-01A-100	0.000	0.000	0.000	0.000			103.1	107.2	
6Z-CWS-MFN-01B-100	0.000	0.000	0.000	0.000			103.1	107.2	
6Z-CWS-MFN-01C-100	0.000	0.000	0.000	0.000			103.1	107.2	
6Z-CWS-MFN-01D-100	0.000	0.000	0.000	0.000			103.1	107.2	
6Z-CWS-MFN-01E-100	0.000	0.000	0.000	0.000			103.1	107.2	
6Z-CWS-MFN-01F-100	0.000	0.000	0.000	0.000			103.1	107.2	
6Z-CWS-MFN-01G-100	0.000	0.000	0.000	0.000			103.1	107.2	
6Z-CWS-MFN-01H-100	0.000	0.000	0.000	0.000			103.1	107.2	
6Z-CWS-MFN-01I-100	0.000	0.000	0.000	0.000			103.1	107.2	0.00
6Z-CWS-MFN-01J-100	0.000	0.000	0.000	0.000			103.1	107.2	0.00
6Z-CWS-MPM-01A-100	0.000	0.000	0.000	0.000			100.5	105.1	
6Z-CWS-MPM-01B-100	0.000	0.000	0.000	0.000			100.5	105.1	
6Z-CWS-MPM-02-100	0.000	0.000	0.000	0.000			103.1	107.2	
6Z-LVB-BUS-22	0.000	0.000	0.000	0.000			103.1	103.1	0.00
6Z-LVB-MCC-121-200	0.000	0.000	0.000	0.000			103.1	103.1	
6Z-LVB-MCC-122-200	0.000	0.000	0.000	0.000			103.1	103.1	
6Z-LVB-MCC-123-200	0.000	0.000	0.000	0.000			103.1	103.1	
6Z-LVB-MCC-221-200	0.000	0.000	0.000	0.000			103.1	103.1	
6Z-LVB-MCC-222-200	0.000	0.000	0.000	0.000			103.1	103.1	
6Z-MPT-XFR-1	0.000	0.000	0.000	0.000			104.3	100.5	3.77
6Z-MVA-BUS-1	0.000	0.000	0.000	0.000			100.5	100.5	0.00
6Z-MVA-BUS-12	0.000	0.000	0.000	0.000			103.1	103.1	0.00
6Z-MVA-SWG-2-100	0.000	0.000	0.000	0.000			100.5	100.5	0.00
6Z-MVA-SWG-21-100	0.000	0.000	0.000	0.000			103.1	103.1	0.00
6Z-MVC-SWG-11-100	0.000	0.000	0.000	0.000			103.1	103.1	0.00
6Z-SUS-XFR-11	0.000	0.000	0.000	0.000			100.5	103.1	2.58
6Z-SUS-XFR-11-100	0.000	0.000	0.000	0.000			100.5	100.5	0.00
6Z-SUS-XFR-12	0.000	0.000	0.000	0.000			100.5	103.1	2.58
6Z-SUS-XFR-12-100	0.000	0.000	0.000	0.000			100.5	100.5	
6Z-SUS-XFR-21	0.000	0.000	0.000	0.000			100.5	103.1	2.58
6Z-SUS-XFR-21-100	0.000	0.000	0.000	0.000			100.5	100.5	
6Z-SUS-XFR-22	0.000	0.000	0.000	0.000			100.5	103.1	2.58
6Z-SUS-XFR-22-100	0.000	0.000	0.000	0.000			100.5	100.5	
DCC1 FEEDER	0.000	0.000	0.000	0.000			103.1	103.1	

Project:		ETAP		Page:	17
Location:		20.6.0C		Date:	04-18-2023
Contract:				SN:	KIEWITRWN9
Engineer:				Revision:	Base
Filename:	GE-Southern		Study Case: LF LL HV	Config.:	Normal

Branch ID	From-To Bus Flow		To-From Bus Flow		Losses		% Bus Voltage		Vd % Drop in Vmag
	MW	Mvar	MW	Mvar	kW	kvar	From	To	
DCC2 FEEDER	0.000	0.000	0.000	0.000			103.1	103.1	
Linde 1 Feeder	0.000	0.000	0.000	0.000			100.5	100.5	

* This Transmission Line includes Series Capacitor.

Project:		ETAP		Page:	18
Location:		20.6.0C		Date:	04-18-2023
Contract:				SN:	KIEWITRWN9
Engineer:				Revision:	Base
Filename:	GE-Southern	Study Case: LF LL HV		Config.:	Normal

Alert Summary Report

	% Alert Settings	
	Critical	Marginal
Loading		
Bus	100.0	98.0
Cable / Busway	100.0	98.0
Reactor	100.0	98.0
Line	100.0	98.0
Transformer	100.0	98.0
Panel	100.0	98.0
Protective Device	100.0	98.0
Generator	100.0	98.0
Inverter/Charger	100.0	98.0
Bus Voltage		
OverVoltage	105.0	102.0
UnderVoltage	95.0	98.0
Generator Excitation		
OverExcited (Q Max.)	100.0	95.0
UnderExcited (Q Min.)	100.0	

Critical Report

Device ID	Type	Condition	Rating/Limit	Unit	Operating	% Operating	Phase Type
Bus18	Bus	Over Voltage	4.000	kV	4.289	107.2	3-Phase
Bus2	Bus	Over Voltage	4.000	kV	4.289	107.2	3-Phase
Bus20	Bus	Over Voltage	4.000	kV	4.289	107.2	3-Phase
Bus21	Bus	Over Voltage	4.000	kV	4.289	107.2	3-Phase
Bus22	Bus	Over Voltage	4.000	kV	4.289	107.2	3-Phase
Bus23	Bus	Over Voltage	4.000	kV	4.289	107.2	3-Phase
Bus24	Bus	Over Voltage	4.000	kV	4.289	107.2	3-Phase
Bus25	Bus	Over Voltage	4.000	kV	4.289	107.2	3-Phase
Bus26	Bus	Over Voltage	4.000	kV	4.289	107.2	3-Phase
Bus28	Bus	Over Voltage	13.200	kV	13.873	105.1	3-Phase
Bus29	Bus	Over Voltage	4.000	kV	4.289	107.2	3-Phase
Bus43	Bus	Over Voltage	4.000	kV	4.289	107.2	3-Phase
Bus6	Bus	Over Voltage	13.200	kV	13.873	105.1	3-Phase

Marginal Report

Project:		ETAP		Page:	19
Location:		20.6.0C		Date:	04-18-2023
Contract:				SN:	KIEWITRWN9
Engineer:				Revision:	Base
Filename:	GE-Southern	Study Case: LF LL HV		Config.:	Normal

Marginal Report

Device ID	Type	Condition	Rating/Limit	Unit	Operating	% Operating	Phase Type
6Z-LVB-MCC-121	Bus	Over Voltage	0.480	kV	0.495	103.1	3-Phase
6Z-LVB-MCC-122	Bus	Over Voltage	0.480	kV	0.495	103.1	3-Phase
6Z-LVB-MCC-123	Bus	Over Voltage	0.480	kV	0.495	103.1	3-Phase
6Z-LVB-MCC-221	Bus	Over Voltage	0.480	kV	0.495	103.1	3-Phase
6Z-LVB-MCC-222	Bus	Over Voltage	0.480	kV	0.495	103.1	3-Phase
6Z-LVB-SWG-12	Bus	Over Voltage	0.480	kV	0.495	103.1	3-Phase
6Z-LVB-SWG-22	Bus	Over Voltage	0.480	kV	0.495	103.1	3-Phase
6Z-MVC-SWG-11	Bus	Over Voltage	4.160	kV	4.289	103.1	3-Phase
6Z-MVC-SWG-21	Bus	Over Voltage	4.160	kV	4.289	103.1	3-Phase
Bus8	Bus	Over Voltage	4.160	kV	4.289	103.1	3-Phase
Bus9	Bus	Over Voltage	4.160	kV	4.289	103.1	3-Phase
FIRE PUMP TAP BUS	Bus	Over Voltage	0.480	kV	0.495	103.1	3-Phase
HV BUS	Bus	Over Voltage	230.000	kV	239.890	104.3	3-Phase
SUS 11 Secondary	Bus	Over Voltage	4.160	kV	4.289	103.1	3-Phase
SUS 12 Secondary	Bus	Over Voltage	0.480	kV	0.495	103.1	3-Phase
SUS 21 SECONDARY	Bus	Over Voltage	4.160	kV	4.289	103.1	3-Phase
SUS 22 SECONDARY	Bus	Over Voltage	0.480	kV	0.495	103.1	3-Phase

Project:		ETAP		Page:	20
Location:		20.6.0C		Date:	04-18-2023
Contract:				SN:	KIEWITRWN9
Engineer:				Revision:	Base
Filename:	GE-Southern		Study Case: LF LL HV	Config.:	Normal

SUMMARY OF TOTAL GENERATION, LOADING & DEMAND

	MW	Mvar	MVA	% PF
Source (Swing Buses):	0.000	0.000	0.000	
Source (Non-Swing Buses):	0.000	0.000	0.000	
Total Demand:	0.000	0.000	0.000	
Total Motor Load:	0.000	0.000	0.000	
Total Static Load:	0.000	0.000	0.000	
Total Constant I Load:	0.000	0.000	0.000	
Total Generic Load:	0.000	0.000	0.000	
Apparent Losses:	0.000	0.000		
System Mismatch:	0.000	0.000		

Number of Iterations: 3

APPENDICES

PROJECT: GE/Southern/Linde Advanced NGCC Integration
JOB NUMBER: 20041223

CALC NO CA-ELE-002

SUBJECT ELECTRICAL SYSTEMS ANALYSIS

BY Nick Mechler **DATE** 4/21/2023 **SHEET REV** 0

APPENDIX F

Description	No. of Pages
Short Circuit Study Reports	55

Project:	ETAP	Page:	1
Location:	20.6.0C	Date:	04-18-2023
Contract:		SN:	KIEWITRWN9
Engineer:	Study Case: SC HL HV	Revision:	Base
Filename: GE-Southern		Config.:	Normal

Electrical Transient Analyzer Program

Short-Circuit Analysis

ANSI Standard

3-Phase Fault Currents

	Swing	V-Control	Load	Total
Number of Buses:	1	0	37	38

	XFMR2	XFMR3	Reactor	Line/Cable/ Busway	Impedance	Tie PD	Total
Number of Branches:	5	0	0	31	0	1	37

	Synchronous Generator	Power Grid	Synchronous Motor	Induction Machines	Lumped Load	Total
Number of Machines:	0	1	0	15	5	21

System Frequency:	60.00
Unit System:	English
Project Filename:	GE-Southern
Output Filename:	\\kiewitplaza\kegi\Data\ES\20041223-FOA2515_GE_Southern_Linde_Advanced_NGCC_Integration\ENG\Engineering\Elec_Controls\Calcs\ETAP\GE-Southern\SC-1.SA1S

Project:		ETAP		Page:	2
Location:		20.6.0C		Date:	04-18-2023
Contract:				SN:	KIEWITRWN9
Engineer:				Revision:	Base
Filename:	GE-Southern	Study Case: SC HL HV		Config.:	Normal

Adjustments

Tolerance	Apply Adjustments	Individual /Global	Percent
Transformer Impedance:	Yes	Individual	
Reactor Impedance:	Yes	Individual	
Overload Heater Resistance:	No		
Transmission Line Length:	Yes	Individual	
Cable / Busway Length:	Yes	Individual	

Temperature Correction	Apply Adjustments	Individual /Global	Degree C
Transmission Line Resistance:	Yes	Individual	
Cable / Busway Resistance:	Yes	Individual	

Project:		ETAP		Page:	3
Location:		20.6.0C		Date:	04-18-2023
Contract:				SN:	KIEWITRWN9
Engineer:				Revision:	Base
Filename:	GE-Southern	Study Case: SC HL HV		Config.:	Normal

Bus Input Data

Bus					Initial Voltage	
ID	Type	Nom. kV	Base kV	Sub-sys	%Mag.	Ang.
6Z-LVB-MCC-121	Load	0.480	0.492	1	100.00	0.00
6Z-LVB-MCC-122	Load	0.480	0.492	1	100.00	0.00
6Z-LVB-MCC-123	Load	0.480	0.492	1	100.00	0.00
6Z-LVB-MCC-221	Load	0.480	0.492	1	100.00	0.00
6Z-LVB-MCC-222	Load	0.480	0.492	1	100.00	0.00
6Z-LVB-SWG-12	Load	0.480	0.492	1	100.00	0.00
6Z-LVB-SWG-22	Load	0.480	0.492	1	100.00	0.00
6Z-MVA-SWG-1	Load	13.800	13.800	1	100.00	0.00
6Z-MVA-SWG-2	Load	13.800	13.800	1	100.00	0.00
6Z-MVC-SWG-11	Load	4.160	4.267	1	100.00	0.00
6Z-MVC-SWG-21	Load	4.160	4.267	1	100.00	0.00
Bus2	Load	4.000	4.267	1	100.00	0.00
Bus6	Load	13.200	13.800	1	100.00	0.00
Bus7	Load	13.800	13.800	1	100.00	0.00
Bus8	Load	4.160	4.267	1	100.00	0.00
Bus9	Load	4.160	4.267	1	100.00	0.00
Bus18	Load	4.000	4.267	1	100.00	0.00
Bus20	Load	4.000	4.267	1	100.00	0.00
Bus21	Load	4.000	4.267	1	100.00	0.00
Bus22	Load	4.000	4.267	1	100.00	0.00
Bus23	Load	4.000	4.267	1	100.00	0.00
Bus24	Load	4.000	4.267	1	100.00	0.00
Bus25	Load	4.000	4.267	1	100.00	0.00
Bus26	Load	4.000	4.267	1	100.00	0.00
Bus28	Load	13.200	13.800	1	100.00	0.00
Bus29	Load	4.000	4.267	1	100.00	0.00
Bus43	Load	4.000	4.267	1	100.00	0.00
FIRE PUMP TAP BUS	Load	0.480	0.492	1	100.00	0.00
HV BUS	SWNG	230.000	230.000	1	104.30	0.00
MPT X WINDING	Load	13.800	13.800	1	100.00	0.00
SUS 11 Primary	Load	13.800	13.800	1	100.00	0.00
SUS 11 Secondary	Load	4.160	4.267	1	100.00	0.00
SUS 12 Primary	Load	13.800	13.800	1	100.00	0.00
SUS 12 Secondary	Load	0.480	0.492	1	100.00	0.00
SUS 21 PRIMARY	Load	13.800	13.800	1	100.00	0.00
SUS 21 SECONDARY	Load	4.160	4.267	1	100.00	0.00
SUS 22 PRIMARY	Load	13.800	13.800	1	100.00	0.00

Project:		ETAP		Page:	4
Location:		20.6.0C		Date:	04-18-2023
Contract:				SN:	KIEWITRWN9
Engineer:				Revision:	Base
Filename:	GE-Southern	Study Case: SC HL HV		Config.:	Normal

Bus					Initial Voltage	
ID	Type	Nom. kV	Base kV	Sub-sys	%Mag.	Ang.
SUS 22 SECONDARY	Load	0.480	0.492	1	100.00	0.00

38 Buses Total

All voltages reported by ETAP are in % of bus Nominal kV.
Base kV values of buses are calculated and used internally by ETAP.

Project:		ETAP		Page:	5
Location:		20.6.0C		Date:	04-18-2023
Contract:				SN:	KIEWITRWN9
Engineer:				Revision:	Base
Filename:	GE-Southern	Study Case: SC HL HV		Config.:	Normal

Line/Cable/Busway Input Data

Line/Cable/Busway	ohms or siemens/1000 ft per Conductor (Cable) or per Phase (Line/Busway)								
			Length						
ID	Library	Size	Adj. (ft)	% Tol.	#/Phase	T (°C)	R	X	Y
6Z-CWS-MFN-01A-100	5.0NCUS1	1/0	800.0	0	1	75	0.12781	0.09800	0.0000000
6Z-CWS-MFN-01B-100	5.0NCUS1	1/0	800.0	0	1	75	0.12781	0.09800	0.0000000
6Z-CWS-MFN-01C-100	5.0NCUS1	1/0	850.0	0	1	75	0.12781	0.09800	0.0000000
6Z-CWS-MFN-01D-100	5.0NCUS1	1/0	850.0	0	1	75	0.12781	0.09800	0.0000000
6Z-CWS-MFN-01E-100	5.0NCUS1	1/0	900.0	0	1	75	0.12781	0.09800	0.0000000
6Z-CWS-MFN-01F-100	5.0NCUS1	1/0	900.0	0	1	75	0.12781	0.09800	0.0000000
6Z-CWS-MFN-01G-100	5.0NCUS1	1/0	950.0	0	1	75	0.12781	0.09800	0.0000000
6Z-CWS-MFN-01H-100	5.0NCUS1	1/0	950.0	0	1	75	0.12781	0.09800	0.0000000
6Z-CWS-MFN-01I-100	5.0NCUS1	1/0	1100.0	0	1	75	0.12781	0.09800	0.0000000
6Z-CWS-MFN-01J-100	5.0NCUS1	1/0	1100.0	0	1	75	0.12781	0.09800	0.0000000
6Z-CWS-MPM-01A-100	15NCUS1	500	500.0	0	1	75	0.03338	0.07900	0.0000000
6Z-CWS-MPM-01B-100	15NCUS1	500	500.0	0	1	75	0.03338	0.07900	0.0000000
6Z-CWS-MPM-02-100	5.0NCUS1	1/0	500.0	0	1	75	0.12781	0.09800	0.0000000
6Z-LVB-BUS-22	0.6NCUN1	750	50.0	0	9	75	0.01940	0.03560	0.0000000
6Z-LVB-MCC-121-200	0.6NCUN1	500	50.0	0	5	75	0.02700	0.03960	0.0000000
6Z-LVB-MCC-122-200	0.6NCUN1	500	50.0	0	5	75	0.02700	0.03960	0.0000000
6Z-LVB-MCC-123-200	0.6NCUN1	500	50.0	0	5	75	0.02700	0.03960	0.0000000
6Z-LVB-MCC-221-200	0.6NCUN1	500	50.0	0	5	75	0.02760	0.03730	0.0000000
6Z-LVB-MCC-222-200	0.6NCUN1	500	50.0	0	5	75	0.02760	0.03730	0.0000000
6Z-MVA-BUS-1	15NCUN1	750	100.0	0	5	75	0.01850	0.03400	0.0000000
6Z-MVA-BUS-12	0.6NCUN1	750	50.0	0	9	75	0.01900	0.03840	0.0000000
6Z-MVA-SWG-2-100	15NCUS1	500	1500.0	0	1	75	0.03338	0.07900	0.0000000
6Z-MVA-SWG-21-100	5.0NCUS3	500	50.0	0	3	75	0.02840	0.03510	0.0000000
6Z-MVC-SWG-11-100	5.0NCUS1	500	50.0	0	3	75	0.02622	0.06142	0.0000000
6Z-SUS-XFR-11-100	15NCUS1	500	50.0	0	1	75	0.02840	0.04210	0.0000000
6Z-SUS-XFR-12-100	5.0NCUS1	350	50.0	0	1	75	0.03709	0.06325	0.0000000
6Z-SUS-XFR-21-100	15NCUS1	500	50.0	0	1	75	0.03338	0.07900	0.0000000
6Z-SUS-XFR-22-100	5.0NCUS3	500	100.0	0	1	75	0.02840	0.03510	0.0000000
DCC1 FEEDER	5.0NCUS1	500	400.0	0	1	75	0.02840	0.04210	0.0000000
DCC2 FEEDER	5.0NCUS1	500	400.0	0	1	75	0.02840	0.04210	0.0000000
Linde 1 Feeder	15NCUS1	500	250.0	0	10	75	0.02840	0.04210	0.0000000

Line / Cable / Busway resistances are listed at the specified temperatures.

Project:		ETAP		Page:	6
Location:		20.6.0C		Date:	04-18-2023
Contract:				SN:	KIEWITRWN9
Engineer:				Revision:	Base
Filename:	GE-Southern	Study Case: SC HL HV		Config.:	Normal

2-Winding Transformer Input Data

Transformer	Rating					Z Variation			% Tap Setting		Adjusted
ID	MVA	Prim. kV	Sec. kV	% Z	X/R	+ 5%	- 5%	% Tol.	Prim.	Sec.	% Z
6Z-MPT-XFR-1	43.000	230.000	13.800	10.50	29.50	0	0	-7.5	0	0	9.7125
6Z-SUS-XFR-11	7.000	13.800	4.160	6.50	13.55	0	0	-7.5	-2.500	0	6.0125
6Z-SUS-XFR-12	2.500	13.800	0.480	5.75	10.67	0	0	-7.5	-2.500	0	5.3188
6Z-SUS-XFR-21	7.000	13.800	4.160	6.50	13.55	0	0	-7.5	-2.500	0	6.0125
6Z-SUS-XFR-22	2.500	13.800	0.480	5.75	10.67	0	0	-7.5	-2.500	0	5.3188

Project:		ETAP		Page:	7
Location:		20.6.0C		Date:	04-18-2023
Contract:				SN:	KIEWITRWN9
Engineer:				Revision:	Base
Filename:	GE-Southern		Study Case: SC HL HV	Config.:	Normal

Branch Connections

CKT/Branch		Connected Bus ID		% Impedance, Pos. Seq., 100 MVAb			
ID	Type	From Bus	To Bus	R	X	Z	Y
6Z-MPT-XFR-1	2W XFMR	HV BUS	MPT X WINDING	0.77	22.57	22.59	
6Z-SUS-XFR-11	2W XFMR	SUS 11 Primary	SUS 11 Secondary	6.01	81.43	81.65	
6Z-SUS-XFR-12	2W XFMR	SUS 12 Primary	SUS 12 Secondary	18.87	201.36	202.25	
6Z-SUS-XFR-21	2W XFMR	SUS 21 PRIMARY	SUS 21 SECONDARY	6.01	81.43	81.65	
6Z-SUS-XFR-22	2W XFMR	SUS 22 PRIMARY	SUS 22 SECONDARY	18.87	201.36	202.25	
6Z-CWS-MFN-01A-100	Cable	6Z-MVC-SWG-11	Bus18	56.16	43.07	70.78	
6Z-CWS-MFN-01B-100	Cable	6Z-MVC-SWG-11	Bus20	56.16	43.07	70.78	
6Z-CWS-MFN-01C-100	Cable	6Z-MVC-SWG-11	Bus21	59.67	45.76	75.20	
6Z-CWS-MFN-01D-100	Cable	6Z-MVC-SWG-11	Bus26	59.67	45.76	75.20	
6Z-CWS-MFN-01E-100	Cable	6Z-MVC-SWG-11	Bus22	63.19	48.45	79.62	
6Z-CWS-MFN-01F-100	Cable	6Z-MVC-SWG-11	Bus23	63.19	48.45	79.62	
6Z-CWS-MFN-01G-100	Cable	6Z-MVC-SWG-11	Bus24	66.70	51.14	84.05	
6Z-CWS-MFN-01H-100	Cable	6Z-MVC-SWG-11	Bus25	66.70	51.14	84.05	
6Z-CWS-MFN-01I-100	Cable	6Z-MVC-SWG-11	Bus43	77.23	59.22	97.32	
6Z-CWS-MFN-01J-100	Cable	6Z-MVC-SWG-11	Bus2	77.23	59.22	97.32	
6Z-CWS-MPM-01A-100	Cable	6Z-MVA-SWG-1	Bus6	0.88	2.07	2.25	
6Z-CWS-MPM-01B-100	Cable	6Z-MVA-SWG-1	Bus28	0.88	2.07	2.25	
6Z-CWS-MPM-02-100	Cable	6Z-MVC-SWG-11	Bus29	35.10	26.92	44.23	
6Z-LVB-BUS-22	Cable	SUS 22 SECONDARY	6Z-LVB-SWG-22	4.45	8.16	9.29	
6Z-LVB-MCC-121-200	Cable	6Z-LVB-SWG-12	6Z-LVB-MCC-121	11.14	16.34	19.78	
6Z-LVB-MCC-122-200	Cable	6Z-LVB-SWG-12	6Z-LVB-MCC-122	11.14	16.34	19.78	
6Z-LVB-MCC-123-200	Cable	6Z-LVB-SWG-12	6Z-LVB-MCC-123	11.14	16.34	19.78	
6Z-LVB-MCC-221-200	Cable	6Z-LVB-SWG-22	6Z-LVB-MCC-221	11.39	15.39	19.14	
6Z-LVB-MCC-222-200	Cable	6Z-LVB-SWG-22	6Z-LVB-MCC-222	11.39	15.39	19.14	
6Z-MVA-BUS-1	Cable	MPT X WINDING	6Z-MVA-SWG-1	0.02	0.04	0.04	
6Z-MVA-BUS-12	Cable	SUS 12 Secondary	FIRE PUMP TAP BUS	4.36	8.80	9.82	
6Z-MVA-SWG-2-100	Cable	6Z-MVA-SWG-1	6Z-MVA-SWG-2	2.63	6.22	6.76	
6Z-MVA-SWG-21-100	Cable	SUS 21 SECONDARY	6Z-MVC-SWG-21	0.26	0.32	0.41	
6Z-MVC-SWG-11-100	Cable	SUS 11 Secondary	6Z-MVC-SWG-11	0.24	0.56	0.61	
6Z-SUS-XFR-11-100	Cable	6Z-MVA-SWG-1	SUS 11 Primary	0.07	0.11	0.13	
6Z-SUS-XFR-12-100	Cable	6Z-MVA-SWG-1	SUS 12 Primary	0.10	0.17	0.19	
6Z-SUS-XFR-21-100	Cable	6Z-MVA-SWG-2	SUS 21 PRIMARY	0.09	0.21	0.23	
6Z-SUS-XFR-22-100	Cable	6Z-MVA-SWG-2	SUS 22 PRIMARY	0.15	0.18	0.24	
DCC1 FEEDER	Cable	6Z-MVC-SWG-21	Bus8	6.24	9.25	11.16	
DCC2 FEEDER	Cable	6Z-MVC-SWG-21	Bus9	6.24	9.25	11.16	
Linde 1 Feeder	Cable	6Z-MVA-SWG-1	Bus7	0.04	0.06	0.07	

Project:		ETAP		Page:	8
Location:		20.6.0C		Date:	04-18-2023
Contract:				SN:	KIEWITRWN9
Engineer:				Revision:	Base
Filename:	GE-Southern		Study Case: SC HL HV	Config.:	Normal

CKT/Branch		Connected Bus ID		% Impedance, Pos. Seq., 100 MVAb			
ID	Type	From Bus	To Bus	R	X	Z	Y
CB12	Tie Breaker	FIRE PUMP TAP BUS	6Z-LVB-SWG-12				

Project:		ETAP		Page:	9
Location:		20.6.0C		Date:	04-18-2023
Contract:				SN:	KIEWITRWN9
Engineer:				Revision:	Base
Filename:	GE-Southern	Study Case: SC HL HV		Config.:	Normal

Power Grid Input Data

Power Grid	Connected Bus	Rating		% Impedance 100 MVA Base		
ID	ID	MVASC	kV	X/R	R	X
U1	HV BUS	19918.580	230.000	29.00	0.01730	0.50175

Total Connected Power Grids (= 1): 19918.580 MVA

Project:		ETAP		Page:	10
Location:		20.6.0C		Date:	04-18-2023
Contract:				SN:	KIEWITRWN9
Engineer:				Revision:	Base
Filename:	GE-Southern	Study Case: SC HL HV		Config.:	Normal

Induction Machine Input Data

Induction Machine		Connected Bus	Rating				X/R Ratio		% Impedance Machine Base		
ID	Qty	ID	HP/kW	kVA	kV	RPM	X"/R	X'/R	R	X"	X'
Motors											
6Z-CWS-MFN-01J	1	Bus2	250.00	242.34	4.000	1800	12.31	12.31	1.50	18.46	46.15
6Z-CWS-MPM-01A	1	Bus6	5500.00	4665.19	13.200	1800	35.00	35.00	0.44	15.38	23.08
DCC BLOWER #1	1	Bus8	1750.00	1501.29	4.000	1800	29.53	29.53	0.52	15.38	23.08
DCC BLOWER #2	1	Bus9	1750.00	1501.29	4.000	1800	29.53	29.53	0.52	15.38	23.08
6Z-CWS-MFN-01A	1	Bus18	250.00	242.34	4.000	1800	12.31	12.31	1.50	18.46	46.15
6Z-CWS-MFN-01B	1	Bus20	250.00	242.34	4.000	1800	12.31	12.31	1.50	18.46	46.15
6Z-CWS-MFN-01C	1	Bus21	250.00	242.34	4.000	1800	12.31	12.31	1.50	18.46	46.15
6Z-CWS-MFN-01E	1	Bus22	250.00	242.34	4.000	1800	12.31	12.31	1.50	18.46	46.15
6Z-CWS-MFN-01F	1	Bus23	250.00	242.34	4.000	1800	12.31	12.31	1.50	18.46	46.15
6Z-CWS-MFN-01G	1	Bus24	250.00	242.34	4.000	1800	12.31	12.31	1.50	18.46	46.15
6Z-CWS-MFN-01H	1	Bus25	250.00	242.34	4.000	1800	12.31	12.31	1.50	18.46	46.15
6Z-CWS-MFN-01D	1	Bus26	250.00	242.34	4.000	1800	12.31	12.31	1.50	18.46	46.15
6Z-CWS-MPM-01B	1	Bus28	5500.00	4665.19	13.200	1800	35.00	35.00	0.44	15.38	23.08
6Z-CWS-MPM-02	1	Bus29	500.00	434.37	4.000	1800	17.41	17.41	1.06	18.46	46.15
6Z-CWS-MFN-011	1	Bus43	250.00	242.34	4.000	1800	12.31	12.31	1.50	18.46	46.15

Total Connected Induction Motors (= 15): 15190.7 kVA

Project:		ETAP		Page:	11
Location:		20.6.0C		Date:	04-18-2023
Contract:				SN:	KIEWITRWN9
Engineer:				Revision:	Base
Filename:	GE-Southern	Study Case: SC HL HV		Config.:	Normal

Lumped Load Input Data

Lumped Load						Motor Loads							Static Loads	
Lumped Load	Connected Bus	Rating		% Load		Loading		X/R Ratio		% Impedance (Machine Base)			Loading	
ID	ID	kVA	kV	MTR	STAT	kW	kvar	X"/R	X'/R	R	X"	X'	kW	kvar
6Z-LVB-MCC-121 Load	6Z-LVB-MCC-121	964.4	0.480	66	34	547.4	324.8	2.38	2.38	8.403	20.00	50.00	281.99	167.32
6Z-LVB-MCC-122 Load	6Z-LVB-MCC-122	958.6	0.480	66	34	544.1	322.8	2.38	2.38	8.403	20.00	50.00	280.29	166.31
6Z-LVB-MCC-221 Load	6Z-LVB-MCC-221	980.2	0.480	83	17	673.6	456.2	2.38	2.38	8.403	20.00	50.00	137.97	93.44
6Z-LVB-MCC-222 Load	6Z-LVB-MCC-222	980.2	0.480	83	17	673.6	456.2	2.38	2.38	8.403	20.00	50.00	137.97	93.44
Linde Lumped Load 1	Bus7	43373.0	13.800	100	0	36867.1	22848.2	10.00	10.00	1.538	15.38	23.08	0.00	0.00

Total Connected Lumped Loads (= 5): 47256.4 kVA

Project:		ETAP		Page:	12
Location:		20.6.0C		Date:	04-18-2023
Contract:				SN:	KIEWITRWN9
Engineer:				Revision:	Base
Filename:	GE-Southern		Study Case: SC HL HV	Config.:	Normal

SHORT-CIRCUIT REPORT

3-phase fault at bus: **6Z-LVB-MCC-121**

Prefault voltage = 0.504 kV = 105.00 % of nominal bus kV (0.480 kV)
= 102.38 % of base (0.492 kV)

Contribution		1/2 Cycle				
From Bus ID	To Bus ID	% V From Bus	kA Real	kA Imaginary	Imag. /Real	kA Symm. Magnitude
6Z-LVB-MCC-121	Total	0.00	10.123	-55.388	5.5	56.305
6Z-LVB-SWG-12	6Z-LVB-MCC-121	9.11	8.687	-51.971	6.0	52.692
6Z-LVB-MCC-121 Load	6Z-LVB-MCC-121	105.00	1.435	-3.416	2.4	3.706

NACD Ratio = 1.00

# Indicates a fault current contribution from a three-winding transformer.
* Indicates a fault current through a tie circuit breaker.
If the faulted bus is involved in loops formed by protection devices, the short-circuit contributions through these protective devices will not be reported.

Project:		ETAP		Page:	13
Location:		20.6.0C		Date:	04-18-2023
Contract:				SN:	KIEWITRWN9
Engineer:				Revision:	Base
Filename:	GE-Southern	Study Case: SC HL HV		Config.:	Normal

3-phase fault at bus: **6Z-LVB-MCC-122**

Prefault voltage = 0.504 kV = 105.00 % of nominal bus kV (0.480 kV)
= 102.38 % of base (0.492 kV)

Contribution		1/2 Cycle				
From Bus ID	To Bus ID	% V From Bus	kA Real	kA Imaginary	Imag. /Real	kA Symm. Magnitude
6Z-LVB-MCC-122	Total	0.00	10.123	-55.384	5.5	56.301
6Z-LVB-SWG-12	6Z-LVB-MCC-122	9.12	8.696	-51.988	6.0	52.710
6Z-LVB-MCC-122 Load	6Z-LVB-MCC-122	105.00	1.427	-3.396	2.4	3.683

NACD Ratio = 1.00

# Indicates a fault current contribution from a three-winding transformer.
* Indicates a fault current through a tie circuit breaker.
If the faulted bus is involved in loops formed by protection devices, the short-circuit contributions through these protective devices will not be reported.

Project:		ETAP		Page:	14
Location:		20.6.0C		Date:	04-18-2023
Contract:				SN:	KIEWITRWN9
Engineer:				Revision:	Base
Filename:	GE-Southern	Study Case: SC HL HV		Config.:	Normal

3-phase fault at bus: **6Z-LVB-MCC-123**

Prefault voltage = 0.504 kV = 105.00 % of nominal bus kV (0.480 kV)
= 102.38 % of base (0.492 kV)

Contribution		1/2 Cycle				
From Bus ID	To Bus ID	% V From Bus	kA Real	kA Imaginary	Imag. /Real	kA Symm. Magnitude
6Z-LVB-MCC-123	Total	0.00	10.122	-54.735	5.4	55.663
6Z-LVB-SWG-12	6Z-LVB-MCC-123	9.63	10.122	-54.735	5.4	55.663

NACD Ratio = 1.00

\# Indicates a fault current contribution from a three-winding transformer.
* Indicates a fault current through a tie circuit breaker.
If the faulted bus is involved in loops formed by protection devices, the short-circuit contributions through these protective devices will not be reported.

Project:		ETAP		Page:	15
Location:		20.6.0C		Date:	04-18-2023
Contract:				SN:	KIEWITRWN9
Engineer:				Revision:	Base
Filename:	GE-Southern	Study Case: SC HL HV		Config.:	Normal

3-phase fault at bus: **6Z-LVB-MCC-221**

Prefault voltage = 0.504 kV = 105.00 % of nominal bus kV (0.480 kV)
= 102.38 % of base (0.492 kV)

Contribution		1/2 Cycle				
From Bus ID	To Bus ID	% V From Bus	kA Real	kA Imaginary	Imag. /Real	kA Symm. Magnitude
6Z-LVB-MCC-221	Total	0.00	11.239	-56.153	5.0	57.266
6Z-LVB-SWG-22	6Z-LVB-MCC-221	8.81	9.405	-51.786	5.5	52.633
6Z-LVB-MCC-221 Load	6Z-LVB-MCC-221	105.00	1.835	-4.367	2.4	4.736

NACD Ratio = 1.00

# Indicates a fault current contribution from a three-winding transformer.
* Indicates a fault current through a tie circuit breaker.
If the faulted bus is involved in loops formed by protection devices, the short-circuit contributions through these protective devices will not be reported.

Project:		ETAP		Page:	16
Location:		20.6.0C		Date:	04-18-2023
Contract:				SN:	KIEWITRWN9
Engineer:				Revision:	Base
Filename:	GE-Southern	Study Case: SC HL HV		Config.:	Normal

3-phase fault at bus: **6Z-LVB-MCC-222**

Prefault voltage = 0.504 kV = 105.00 % of nominal bus kV (0.480 kV)
= 102.38 % of base (0.492 kV)

Contribution		1/2 Cycle				
From Bus ID	To Bus ID	% V From Bus	kA Real	kA Imaginary	Imag. /Real	kA Symm. Magnitude
6Z-LVB-MCC-222	Total	0.00	11.239	-56.153	5.0	57.266
6Z-LVB-SWG-22	6Z-LVB-MCC-222	8.81	9.405	-51.786	5.5	52.633
6Z-LVB-MCC-222 Load	6Z-LVB-MCC-222	105.00	1.835	-4.367	2.4	4.736

NACD Ratio = 1.00

# Indicates a fault current contribution from a three-winding transformer.
* Indicates a fault current through a tie circuit breaker.
If the faulted bus is involved in loops formed by protection devices, the short-circuit contributions through these protective devices will not be reported.

Project:		ETAP		Page:	17
Location:		20.6.0C		Date:	04-18-2023
Contract:				SN:	KIEWITRWN9
Engineer:				Revision:	Base
Filename:	GE-Southern	Study Case: SC HL HV		Config.:	Normal

3-phase fault at bus: **6Z-LVB-SWG-12**

Prefault voltage = 0.504 kV = 105.00 % of nominal bus kV (0.480 kV)
= 102.38 % of base (0.492 kV)

Contribution		1/2 Cycle				
From Bus ID	To Bus ID	% V From Bus	kA Real	kA Imaginary	Imag. /Real	kA Symm. Magnitude
6Z-LVB-SWG-12	Total	0.00	8.621	-60.095	7.0	60.710
6Z-LVB-MCC-121	6Z-LVB-SWG-12	0.64	1.431	-3.394	2.4	3.684
6Z-LVB-MCC-122	6Z-LVB-SWG-12	0.63	1.422	-3.374	2.4	3.661
6Z-LVB-MCC-123	6Z-LVB-SWG-12	0.00	0.000	0.000	999.9	0.000
SUS 12 Secondary	FIRE PUMP TAP BUS	4.61	5.768	-53.327	9.2	53.638
*FIRE PUMP TAP BUS	6Z-LVB-SWG-12	0.00	5.768	-53.327	9.2	53.638

NACD Ratio = 1.00

\# Indicates a fault current contribution from a three-winding transformer.
* Indicates a fault current through a tie circuit breaker.
If the faulted bus is involved in loops formed by protection devices, the short-circuit contributions through these protective devices will not be reported.

Project:		ETAP		Page:	18
Location:		20.6.0C		Date:	04-18-2023
Contract:				SN:	KIEWITRWN9
Engineer:				Revision:	Base
Filename:	GE-Southern	Study Case: SC HL HV		Config.:	Normal

3-phase fault at bus: **6Z-LVB-SWG-22**

Prefault voltage = 0.504 kV = 105.00 % of nominal bus kV (0.480 kV)
= 102.38 % of base (0.492 kV)

Contribution		1/2 Cycle				
From Bus ID	To Bus ID	% V From Bus	kA Real	kA Imaginary	Imag. /Real	kA Symm. Magnitude
6Z-LVB-SWG-22	Total	0.00	9.742	-60.652	6.2	61.429
SUS 22 SECONDARY	6Z-LVB-SWG-22	4.25	6.084	-51.989	8.5	52.344
6Z-LVB-MCC-221	6Z-LVB-SWG-22	0.79	1.829	-4.332	2.4	4.702
6Z-LVB-MCC-222	6Z-LVB-SWG-22	0.79	1.829	-4.332	2.4	4.702

NACD Ratio = 1.00

# Indicates a fault current contribution from a three-winding transformer.
* Indicates a fault current through a tie circuit breaker.
If the faulted bus is involved in loops formed by protection devices, the short-circuit contributions through these protective devices will not be reported.

Project:		ETAP		Page:	19
Location:		20.6.0C		Date:	04-18-2023
Contract:				SN:	KIEWITRWN9
Engineer:				Revision:	Base
Filename:	GE-Southern		Study Case: SC HL HV	Config.:	Normal

3-phase fault at bus: **6Z-MVA-SWG-1**

Prefault voltage = 14.490 kV = 105.00 % of nominal bus kV (13.800 kV)
= 105.00 % of base (13.800 kV)

Contribution		1/2 Cycle					1.5 to 4 Cycle				
From Bus ID	To Bus ID	% V From Bus	kA Real	kA Imaginary	Imag. /Real	kA Symm. Magnitude	% V From Bus	kA Real	kA Imaginary	Imag. /Real	kA Symm. Magnitude
6Z-MVA-SWG-1	Total	0.00	2.271	-36.080	15.9	36.151	0.00	1.324	-30.230	22.8	30.259
Bus6	6Z-MVA-SWG-1	0.81	0.045	-1.445	32.0	1.445	0.54	0.020	-0.966	47.9	0.966
Bus28	6Z-MVA-SWG-1	0.81	0.045	-1.445	32.0	1.445	0.54	0.020	-0.966	47.9	0.966
MPT X WINDING	6Z-MVA-SWG-1	0.18	0.659	-18.984	28.8	18.996	0.18	0.659	-18.984	28.8	18.996
6Z-MVA-SWG-2	6Z-MVA-SWG-1	1.75	0.144	-1.076	7.5	1.086	1.14	0.043	-0.705	16.2	0.706
SUS 11 Primary	6Z-MVA-SWG-1	0.02	0.057	-0.667	11.7	0.669	0.01	0.011	-0.291	27.0	0.292
SUS 12 Primary	6Z-MVA-SWG-1	0.01	0.086	-0.223	2.6	0.239	0.01	0.018	-0.108	6.0	0.109
Bus7	6Z-MVA-SWG-1	0.20	1.235	-12.241	9.9	12.303	0.13	0.553	-8.211	14.9	8.229

NACD Ratio = 1.00

# Indicates a fault current contribution from a three-winding transformer.
* Indicates a fault current through a tie circuit breaker.
If the faulted bus is involved in loops formed by protection devices, the short-circuit contributions through these protective devices will not be reported.

Project:		ETAP		Page:	20
Location:		20.6.0C		Date:	04-18-2023
Contract:				SN:	KIEWITRWN9
Engineer:				Revision:	Base
Filename:	GE-Southern		Study Case: SC HL HV	Config.:	Normal

3-phase fault at bus: **6Z-MVA-SWG-2**

Prefault voltage = 14.490 kV = 105.00 % of nominal bus kV (13.800 kV)
= 105.00 % of base (13.800 kV)

Contribution		1/2 Cycle					1.5 to 4 Cycle				
From Bus ID	To Bus ID	% V From Bus	kA Real	kA Imaginary	Imag. /Real	kA Symm. Magnitude	% V From Bus	kA Real	kA Imaginary	Imag. /Real	kA Symm. Magnitude
6Z-MVA-SWG-2	Total	0.00	4.253	-23.809	5.6	24.186	0.00	3.203	-21.067	6.6	21.309
6Z-MVA-SWG-1	6Z-MVA-SWG-2	37.27	4.111	-22.715	5.5	23.084	33.26	3.162	-20.355	6.4	20.599
SUS 21 PRIMARY	6Z-MVA-SWG-2	0.04	0.038	-0.816	21.7	0.817	0.03	0.019	-0.576	30.8	0.576
SUS 22 PRIMARY	6Z-MVA-SWG-2	0.02	0.104	-0.278	2.7	0.297	0.01	0.023	-0.136	6.0	0.138

NACD Ratio = 1.00

# Indicates a fault current contribution from a three-winding transformer.
* Indicates a fault current through a tie circuit breaker.
If the faulted bus is involved in loops formed by protection devices, the short-circuit contributions through these protective devices will not be reported.

Project:		ETAP		Page:	21
Location:		20.6.0C		Date:	04-18-2023
Contract:				SN:	KIEWITRWN9
Engineer:				Revision:	Base
Filename:	GE-Southern	Study Case: SC HL HV		Config.:	Normal

3-phase fault at bus: **6Z-MVC-SWG-11**

Prefault voltage = 4.368 kV = 105.00 % of nominal bus kV (4.160 kV)
= 102.38 % of base (4.267 kV)

Contribution		1/2 Cycle					1.5 to 4 Cycle				
From Bus ID	To Bus ID	% V From Bus	kA Real	kA Imaginary	Imag. /Real	kA Symm. Magnitude	% V From Bus	kA Real	kA Imaginary	Imag. /Real	kA Symm. Magnitude
6Z-MVC-SWG-11	Total	0.00	1.304	-16.987	13.0	17.037	0.00	1.060	-15.217	14.4	15.254
Bus18	6Z-MVC-SWG-11	1.14	0.018	-0.204	11.2	0.205	0.46	0.003	-0.082	28.0	0.082
Bus20	6Z-MVC-SWG-11	1.14	0.018	-0.204	11.2	0.205	0.46	0.003	-0.082	28.0	0.082
Bus21	6Z-MVC-SWG-11	1.21	0.018	-0.204	11.2	0.205	0.49	0.003	-0.082	27.8	0.082
Bus26	6Z-MVC-SWG-11	1.21	0.018	-0.204	11.2	0.205	0.49	0.003	-0.082	27.8	0.082
Bus22	6Z-MVC-SWG-11	1.28	0.018	-0.204	11.1	0.205	0.52	0.003	-0.082	27.7	0.082
Bus23	6Z-MVC-SWG-11	1.28	0.018	-0.204	11.1	0.205	0.52	0.003	-0.082	27.7	0.082
Bus24	6Z-MVC-SWG-11	1.35	0.018	-0.204	11.1	0.204	0.55	0.003	-0.082	27.5	0.082
Bus25	6Z-MVC-SWG-11	1.35	0.018	-0.204	11.1	0.204	0.55	0.003	-0.082	27.5	0.082
Bus43	6Z-MVC-SWG-11	1.57	0.019	-0.203	10.9	0.204	0.63	0.003	-0.082	27.1	0.082
Bus2	6Z-MVC-SWG-11	1.57	0.019	-0.203	10.9	0.204	0.63	0.003	-0.082	27.1	0.082
Bus29	6Z-MVC-SWG-11	1.28	0.024	-0.367	15.1	0.367	0.52	0.004	-0.148	37.5	0.148
SUS 11 Secondary	6Z-MVC-SWG-11	0.68	1.096	-14.583	13.3	14.624	0.66	1.026	-14.245	13.9	14.282

NACD Ratio = 1.00

# Indicates a fault current contribution from a three-winding transformer.
* Indicates a fault current through a tie circuit breaker.
If the faulted bus is involved in loops formed by protection devices, the short-circuit contributions through these protective devices will not be reported.

Project:		ETAP		Page:	22
Location:		20.6.0C		Date:	04-18-2023
Contract:				SN:	KIEWITRWN9
Engineer:				Revision:	Base
Filename:	GE-Southern	Study Case: SC HL HV		Config.:	Normal

3-phase fault at bus: **6Z-MVC-SWG-21**

Prefault voltage = 4.368 kV = 105.00 % of nominal bus kV (4.160 kV)
= 102.38 % of base (4.267 kV)

Contribution		1/2 Cycle					1.5 to 4 Cycle				
From Bus ID	To Bus ID	% V From Bus	kA Real	kA Imaginary	Imag. /Real	kA Symm. Magnitude	% V From Bus	kA Real	kA Imaginary	Imag. /Real	kA Symm. Magnitude
6Z-MVC-SWG-21	Total	0.00	1.448	-16.703	11.5	16.766	0.00	1.302	-15.383	11.8	15.438
SUS 21 SECONDARY	6Z-MVC-SWG-21	0.43	1.326	-13.663	10.3	13.727	0.42	1.247	-13.347	10.7	13.405
Bus8	6Z-MVC-SWG-21	1.29	0.061	-1.520	24.8	1.521	0.86	0.027	-1.018	37.0	1.018
Bus9	6Z-MVC-SWG-21	1.29	0.061	-1.520	24.8	1.521	0.86	0.027	-1.018	37.0	1.018

NACD Ratio = 1.00

# Indicates a fault current contribution from a three-winding transformer.
* Indicates a fault current through a tie circuit breaker.
If the faulted bus is involved in loops formed by protection devices, the short-circuit contributions through these protective devices will not be reported.

Project:		ETAP		Page:	23
Location:		20.6.0C		Date:	04-18-2023
Contract:				SN:	KIEWITRWN9
Engineer:				Revision:	Base
Filename:	GE-Southern	Study Case: SC HL HV		Config.:	Normal

3-phase fault at bus: **Bus2**

Prefault voltage = 4.200 kV = 105.00 % of nominal bus kV (4.000 kV)
= 98.44 % of base (4.267 kV)

Contribution		1/2 Cycle					1.5 to 4 Cycle				
From Bus ID	To Bus ID	% V From Bus	kA Real	kA Imaginary	Imag. /Real	kA Symm. Magnitude	% V From Bus	kA Real	kA Imaginary	Imag. /Real	kA Symm. Magnitude
Bus2	Total	0.00	4.146	-7.185	1.7	8.295	0.00	3.767	-6.848	1.8	7.816
6Z-MVC-SWG-11	Bus2	59.87	4.130	-6.987	1.7	8.117	57.13	3.764	-6.769	1.8	7.745
6Z-CWS-MFN-01J	Bus2	105.00	0.016	-0.198	12.3	0.198	105.00	0.003	-0.079	30.8	0.080

NACD Ratio = 1.00

# Indicates a fault current contribution from a three-winding transformer.
* Indicates a fault current through a tie circuit breaker.
If the faulted bus is involved in loops formed by protection devices, the short-circuit contributions through these protective devices will not be reported.

Project:		ETAP		Page:	24
Location:		20.6.0C		Date:	04-18-2023
Contract:				SN:	KIEWITRWN9
Engineer:				Revision:	Base
Filename:	GE-Southern		Study Case: SC HL HV	Config.:	Normal

3-phase fault at bus: **Bus6**

Prefault voltage = 13.860 kV = 105.00 % of nominal bus kV (13.200 kV)
= 100.43 % of base (13.800 kV)

Contribution		1/2 Cycle					1.5 to 4 Cycle				
From Bus ID	To Bus ID	% V From Bus	kA Real	kA Imaginary	Imag. /Real	kA Symm. Magnitude	% V From Bus	kA Real	kA Imaginary	Imag. /Real	kA Symm. Magnitude
Bus6	Total	0.00	3.277	-29.594	9.0	29.775	0.00	2.230	-25.365	11.4	25.462
6Z-MVA-SWG-1	Bus6	15.28	3.238	-28.203	8.7	28.388	13.21	2.212	-24.437	11.0	24.536
6Z-CWS-MPM-01A	Bus6	105.00	0.040	-1.391	35.0	1.392	105.00	0.018	-0.928	52.5	0.928

NACD Ratio = 1.00

# Indicates a fault current contribution from a three-winding transformer.
* Indicates a fault current through a tie circuit breaker.
If the faulted bus is involved in loops formed by protection devices, the short-circuit contributions through these protective devices will not be reported.

Project:		ETAP		Page:	25
Location:		20.6.0C		Date:	04-18-2023
Contract:				SN:	KIEWITRWN9
Engineer:				Revision:	Base
Filename:	GE-Southern		Study Case: SC HL HV	Config.:	Normal

3-phase fault at bus: **Bus7**

Prefault voltage = 14.490 kV = 105.00 % of nominal bus kV (13.800 kV)
= 105.00 % of base (13.800 kV)

Contribution		1/2 Cycle					1.5 to 4 Cycle				
From Bus ID	To Bus ID	% V From Bus	kA Real	kA Imaginary	Imag. /Real	kA Symm. Magnitude	% V From Bus	kA Real	kA Imaginary	Imag. /Real	kA Symm. Magnitude
Bus7	Total	0.00	2.304	-36.026	15.6	36.100	0.00	1.356	-30.176	22.3	30.206
6Z-MVA-SWG-1	Bus7	0.38	1.078	-23.764	22.1	23.788	0.35	0.808	-21.956	27.2	21.971
Linde Lumped Load 1	Bus7	105.00	1.226	-12.262	10.0	12.323	105.00	0.548	-8.220	15.0	8.238

NACD Ratio = 1.00

# Indicates a fault current contribution from a three-winding transformer.
* Indicates a fault current through a tie circuit breaker.
If the faulted bus is involved in loops formed by protection devices, the short-circuit contributions through these protective devices will not be reported.

Project:		ETAP		Page:	26
Location:		20.6.0C		Date:	04-18-2023
Contract:				SN:	KIEWITRWN9
Engineer:				Revision:	Base
Filename:	GE-Southern	Study Case: SC HL HV		Config.:	Normal

3-phase fault at bus: **Bus8**

Prefault voltage = 4.368 kV = 105.00 % of nominal bus kV (4.160 kV)
= 102.38 % of base (4.267 kV)

Contribution		1/2 Cycle					1.5 to 4 Cycle				
From Bus ID	To Bus ID	% V From Bus	kA Real	kA Imaginary	Imag. /Real	kA Symm. Magnitude	% V From Bus	kA Real	kA Imaginary	Imag. /Real	kA Symm. Magnitude
Bus8	Total	0.00	2.031	-15.138	7.5	15.274	0.00	1.840	-13.972	7.6	14.092
6Z-MVC-SWG-21	Bus8	11.63	1.978	-13.602	6.9	13.745	11.06	1.817	-12.947	7.1	13.074
DCC BLOWER #1	Bus8	109.20	0.052	-1.536	29.5	1.537	109.20	0.023	-1.025	44.3	1.025

NACD Ratio = 1.00

# Indicates a fault current contribution from a three-winding transformer.
* Indicates a fault current through a tie circuit breaker.
If the faulted bus is involved in loops formed by protection devices, the short-circuit contributions through these protective devices will not be reported.

Project:		ETAP		Page:	27
Location:		20.6.0C		Date:	04-18-2023
Contract:				SN:	KIEWITRWN9
Engineer:				Revision:	Base
Filename:	GE-Southern	Study Case: SC HL HV		Config.:	Normal

3-phase fault at bus: **Bus9**

Prefault voltage = 4.368 kV = 105.00 % of nominal bus kV (4.160 kV)
= 102.38 % of base (4.267 kV)

Contribution		1/2 Cycle					1.5 to 4 Cycle				
From Bus ID	To Bus ID	% V From Bus	kA Real	kA Imaginary	Imag. /Real	kA Symm. Magnitude	% V From Bus	kA Real	kA Imaginary	Imag. /Real	kA Symm. Magnitude
Bus9	Total	0.00	2.031	-15.138	7.5	15.274	0.00	1.840	-13.972	7.6	14.092
6Z-MVC-SWG-21	Bus9	11.63	1.978	-13.602	6.9	13.745	11.06	1.817	-12.947	7.1	13.074
DCC BLOWER #2	Bus9	109.20	0.052	-1.536	29.5	1.537	109.20	0.023	-1.025	44.3	1.025

NACD Ratio = 1.00

# Indicates a fault current contribution from a three-winding transformer.
* Indicates a fault current through a tie circuit breaker.
If the faulted bus is involved in loops formed by protection devices, the short-circuit contributions through these protective devices will not be reported.

Project:		ETAP		Page:	28
Location:		20.6.0C		Date:	04-18-2023
Contract:				SN:	KIEWITRWN9
Engineer:				Revision:	Base
Filename:	GE-Southern	Study Case: SC HL HV		Config.:	Normal

3-phase fault at bus: **Bus18**

Prefault voltage = 4.200 kV = 105.00 % of nominal bus kV (4.000 kV)
= 98.44 % of base (4.267 kV)

Contribution		1/2 Cycle					1.5 to 4 Cycle				
From Bus ID	To Bus ID	% V From Bus	kA Real	kA Imaginary	Imag. /Real	kA Symm. Magnitude	% V From Bus	kA Real	kA Imaginary	Imag. /Real	kA Symm. Magnitude
Bus18	Total	0.00	4.270	-8.720	2.0	9.709	0.00	3.804	-8.237	2.2	9.073
6Z-MVC-SWG-11	Bus18	51.10	4.254	-8.522	2.0	9.525	48.28	3.802	-8.157	2.1	8.999
6Z-CWS-MFN-01A	Bus18	105.00	0.016	-0.198	12.3	0.198	105.00	0.003	-0.079	30.8	0.080

NACD Ratio = 1.00

# Indicates a fault current contribution from a three-winding transformer.
* Indicates a fault current through a tie circuit breaker.
If the faulted bus is involved in loops formed by protection devices, the short-circuit contributions through these protective devices will not be reported.

Project:		ETAP		Page:	29
Location:		20.6.0C		Date:	04-18-2023
Contract:				SN:	KIEWITRWN9
Engineer:				Revision:	Base
Filename:	GE-Southern	Study Case: SC HL HV		Config.:	Normal

3-phase fault at bus: **Bus20**

Prefault voltage = 4.200 kV = 105.00 % of nominal bus kV (4.000 kV)
= 98.44 % of base (4.267 kV)

Contribution		1/2 Cycle					1.5 to 4 Cycle				
From Bus ID	To Bus ID	% V From Bus	kA Real	kA Imaginary	Imag. /Real	kA Symm. Magnitude	% V From Bus	kA Real	kA Imaginary	Imag. /Real	kA Symm. Magnitude
Bus20	Total	0.00	4.270	-8.720	2.0	9.709	0.00	3.804	-8.237	2.2	9.073
6Z-MVC-SWG-11	Bus20	51.10	4.254	-8.522	2.0	9.525	48.28	3.802	-8.157	2.1	8.999
6Z-CWS-MFN-01B	Bus20	105.00	0.016	-0.198	12.3	0.198	105.00	0.003	-0.079	30.8	0.080

NACD Ratio = 1.00

# Indicates a fault current contribution from a three-winding transformer.
* Indicates a fault current through a tie circuit breaker.
If the faulted bus is involved in loops formed by protection devices, the short-circuit contributions through these protective devices will not be reported.

Project:		ETAP		Page:	30
Location:		20.6.0C		Date:	04-18-2023
Contract:				SN:	KIEWITRWN9
Engineer:				Revision:	Base
Filename:	GE-Southern	Study Case: SC HL HV		Config.:	Normal

3-phase fault at bus: **Bus21**

Prefault voltage = 4.200 kV = 105.00 % of nominal bus kV (4.000 kV)
= 98.44 % of base (4.267 kV)

Contribution		1/2 Cycle					1.5 to 4 Cycle				
From Bus ID	To Bus ID	% V From Bus	kA Real	kA Imaginary	Imag. /Real	kA Symm. Magnitude	% V From Bus	kA Real	kA Imaginary	Imag. /Real	kA Symm. Magnitude
Bus21	Total	0.00	4.263	-8.427	2.0	9.444	0.00	3.812	-7.975	2.1	8.839
6Z-MVC-SWG-11	Bus21	52.78	4.247	-8.230	1.9	9.261	49.97	3.810	-7.895	2.1	8.766
6Z-CWS-MFN-01C	Bus21	105.00	0.016	-0.198	12.3	0.198	105.00	0.003	-0.079	30.8	0.080

NACD Ratio = 1.00

# Indicates a fault current contribution from a three-winding transformer.
* Indicates a fault current through a tie circuit breaker.
If the faulted bus is involved in loops formed by protection devices, the short-circuit contributions through these protective devices will not be reported.

Project:		ETAP		Page:	31
Location:		20.6.0C		Date:	04-18-2023
Contract:				SN:	KIEWITRWN9
Engineer:				Revision:	Base
Filename:	GE-Southern	Study Case: SC HL HV		Config.:	Normal

3-phase fault at bus: **Bus22**

Prefault voltage = 4.200 kV = 105.00 % of nominal bus kV (4.000 kV)
= 98.44 % of base (4.267 kV)

Contribution		1/2 Cycle					1.5 to 4 Cycle				
From Bus ID	To Bus ID	% V From Bus	kA Real	kA Imaginary	Imag. /Real	kA Symm. Magnitude	% V From Bus	kA Real	kA Imaginary	Imag. /Real	kA Symm. Magnitude
Bus22	Total	0.00	4.249	-8.151	1.9	9.192	0.00	3.813	-7.726	2.0	8.616
6Z-MVC-SWG-11	Bus22	54.37	4.233	-7.953	1.9	9.009	51.56	3.811	-7.647	2.0	8.544
6Z-CWS-MFN-01E	Bus22	105.00	0.016	-0.198	12.3	0.198	105.00	0.003	-0.079	30.8	0.080

NACD Ratio = 1.00

# Indicates a fault current contribution from a three-winding transformer.
* Indicates a fault current through a tie circuit breaker.
If the faulted bus is involved in loops formed by protection devices, the short-circuit contributions through these protective devices will not be reported.

Project:		ETAP		Page:	32
Location:		20.6.0C		Date:	04-18-2023
Contract:				SN:	KIEWITRWN9
Engineer:				Revision:	Base
Filename:	GE-Southern	Study Case: SC HL HV		Config.:	Normal

3-phase fault at bus: **Bus23**

Prefault voltage = 4.200 kV = 105.00 % of nominal bus kV (4.000 kV)
= 98.44 % of base (4.267 kV)

Contribution		1/2 Cycle					1.5 to 4 Cycle				
From Bus ID	To Bus ID	% V From Bus	kA Real	kA Imaginary	Imag. /Real	kA Symm. Magnitude	% V From Bus	kA Real	kA Imaginary	Imag. /Real	kA Symm. Magnitude
Bus23	Total	0.00	4.249	-8.151	1.9	9.192	0.00	3.813	-7.726	2.0	8.616
6Z-MVC-SWG-11	Bus23	54.37	4.233	-7.953	1.9	9.009	51.56	3.811	-7.647	2.0	8.544
6Z-CWS-MFN-01F	Bus23	105.00	0.016	-0.198	12.3	0.198	105.00	0.003	-0.079	30.8	0.080

NACD Ratio = 1.00

# Indicates a fault current contribution from a three-winding transformer.
* Indicates a fault current through a tie circuit breaker.
If the faulted bus is involved in loops formed by protection devices, the short-circuit contributions through these protective devices will not be reported.

Project:		ETAP		Page:	33
Location:		20.6.0C		Date:	04-18-2023
Contract:				SN:	KIEWITRWN9
Engineer:				Revision:	Base
Filename:	GE-Southern	Study Case: SC HL HV		Config.:	Normal

3-phase fault at bus: **Bus24**

Prefault voltage = 4.200 kV = 105.00 % of nominal bus kV (4.000 kV)
= 98.44 % of base (4.267 kV)

Contribution		1/2 Cycle					1.5 to 4 Cycle				
From Bus ID	To Bus ID	% V From Bus	kA Real	kA Imaginary	Imag. /Real	kA Symm. Magnitude	% V From Bus	kA Real	kA Imaginary	Imag. /Real	kA Symm. Magnitude
Bus24	Total	0.00	4.230	-7.889	1.9	8.951	0.00	3.809	-7.490	2.0	8.403
6Z-MVC-SWG-11	Bus24	55.87	4.214	-7.691	1.8	8.770	53.07	3.806	-7.410	1.9	8.331
6Z-CWS-MFN-01G	Bus24	105.00	0.016	-0.198	12.3	0.198	105.00	0.003	-0.079	30.8	0.080

NACD Ratio = 1.00

# Indicates a fault current contribution from a three-winding transformer.
* Indicates a fault current through a tie circuit breaker.
If the faulted bus is involved in loops formed by protection devices, the short-circuit contributions through these protective devices will not be reported.

Project:		ETAP		Page:	34
Location:		20.6.0C		Date:	04-18-2023
Contract:				SN:	KIEWITRWN9
Engineer:				Revision:	Base
Filename:	GE-Southern	Study Case: SC HL HV		Config.:	Normal

3-phase fault at bus: **Bus25**

Prefault voltage = 4.200 kV = 105.00 % of nominal bus kV (4.000 kV)
= 98.44 % of base (4.267 kV)

Contribution		1/2 Cycle					1.5 to 4 Cycle				
From Bus ID	To Bus ID	% V From Bus	kA Real	kA Imaginary	Imag. /Real	kA Symm. Magnitude	% V From Bus	kA Real	kA Imaginary	Imag. /Real	kA Symm. Magnitude
Bus25	Total	0.00	4.230	-7.889	1.9	8.951	0.00	3.809	-7.490	2.0	8.403
6Z-MVC-SWG-11	Bus25	55.87	4.214	-7.691	1.8	8.770	53.07	3.806	-7.410	1.9	8.331
6Z-CWS-MFN-01II	Bus25	105.00	0.016	-0.198	12.3	0.198	105.00	0.003	-0.079	30.8	0.080

NACD Ratio = 1.00

# Indicates a fault current contribution from a three-winding transformer.
* Indicates a fault current through a tie circuit breaker.
If the faulted bus is involved in loops formed by protection devices, the short-circuit contributions through these protective devices will not be reported.

Project:		ETAP		Page:	35
Location:		20.6.0C		Date:	04-18-2023
Contract:				SN:	KIEWITRWN9
Engineer:				Revision:	Base
Filename:	GE-Southern	Study Case: SC HL HV		Config.:	Normal

3-phase fault at bus: **Bus26**

Prefault voltage = 4.200 kV = 105.00 % of nominal bus kV (4.000 kV)
= 98.44 % of base (4.267 kV)

Contribution		1/2 Cycle					1.5 to 4 Cycle				
From Bus ID	To Bus ID	% V From Bus	kA Real	kA Imaginary	Imag. /Real	kA Symm. Magnitude	% V From Bus	kA Real	kA Imaginary	Imag. /Real	kA Symm. Magnitude
Bus26	Total	0.00	4.263	-8.427	2.0	9.444	0.00	3.812	-7.975	2.1	8.839
6Z-MVC-SWG-11	Bus26	52.78	4.247	-8.230	1.9	9.261	49.97	3.810	-7.895	2.1	8.766
6Z-CWS-MFN-01D	Bus26	105.00	0.016	-0.198	12.3	0.198	105.00	0.003	-0.079	30.8	0.080

NACD Ratio = 1.00

# Indicates a fault current contribution from a three-winding transformer.
* Indicates a fault current through a tie circuit breaker.
If the faulted bus is involved in loops formed by protection devices, the short-circuit contributions through these protective devices will not be reported.

Project:		ETAP		Page:	36
Location:		20.6.0C		Date:	04-18-2023
Contract:				SN:	KIEWITRWN9
Engineer:				Revision:	Base
Filename:	GE-Southern	Study Case: SC HL HV		Config.:	Normal

3-phase fault at bus: **Bus28**

Prefault voltage = 13.860 kV = 105.00 % of nominal bus kV (13.200 kV)
= 100.43 % of base (13.800 kV)

Contribution		1/2 Cycle					1.5 to 4 Cycle				
From Bus ID	To Bus ID	% V From Bus	kA Real	kA Imaginary	Imag. /Real	kA Symm. Magnitude	% V From Bus	kA Real	kA Imaginary	Imag. /Real	kA Symm. Magnitude
Bus28	Total	0.00	3.277	-29.594	9.0	29.775	0.00	2.230	-25.365	11.4	25.462
6Z-MVA-SWG-1	Bus28	15.28	3.238	-28.203	8.7	28.388	13.21	2.212	-24.437	11.0	24.536
6Z-CWS-MPM-01B	Bus28	105.00	0.040	-1.391	35.0	1.392	105.00	0.018	-0.928	52.5	0.928

NACD Ratio = 1.00

# Indicates a fault current contribution from a three-winding transformer.
* Indicates a fault current through a tie circuit breaker.
If the faulted bus is involved in loops formed by protection devices, the short-circuit contributions through these protective devices will not be reported.

Project:		ETAP		Page:	37
Location:		20.6.0C		Date:	04-18-2023
Contract:				SN:	KIEWITRWN9
Engineer:				Revision:	Base
Filename:	GE-Southern		Study Case: SC HL HV	Config.:	Normal

3-phase fault at bus: **Bus29**

Prefault voltage = 4.200 kV = 105.00 % of nominal bus kV (4.000 kV)
= 98.44 % of base (4.267 kV)

Contribution		1/2 Cycle					1.5 to 4 Cycle				
From Bus ID	To Bus ID	% V From Bus	kA Real	kA Imaginary	Imag. /Real	kA Symm. Magnitude	% V From Bus	kA Real	kA Imaginary	Imag. /Real	kA Symm. Magnitude
Bus29	Total	0.00	4.033	-10.973	2.7	11.691	0.00	3.516	-10.161	2.9	10.752
6Z-MVC-SWG-11	Bus29	38.06	4.012	-10.618	2.6	11.351	35.60	3.513	-10.019	2.9	10.617
6Z-CWS-MPM-02	Bus29	105.00	0.020	-0.355	17.4	0.356	105.00	0.003	-0.143	43.5	0.143

NACD Ratio = 1.00

# Indicates a fault current contribution from a three-winding transformer.
* Indicates a fault current through a tie circuit breaker.
If the faulted bus is involved in loops formed by protection devices, the short-circuit contributions through these protective devices will not be reported.

Project:		ETAP		Page:	38
Location:		20.6.0C		Date:	04-18-2023
Contract:				SN:	KIEWITRWN9
Engineer:				Revision:	Base
Filename:	GE-Southern	Study Case: SC HL HV		Config.:	Normal

3-phase fault at bus: **Bus43**

Prefault voltage = 4.200 kV = 105.00 % of nominal bus kV (4.000 kV)
= 98.44 % of base (4.267 kV)

Contribution		1/2 Cycle					1.5 to 4 Cycle				
From Bus ID	To Bus ID	% V From Bus	kA Real	kA Imaginary	Imag. /Real	kA Symm. Magnitude	% V From Bus	kA Real	kA Imaginary	Imag. /Real	kA Symm. Magnitude
Bus43	Total	0.00	4.146	-7.185	1.7	8.295	0.00	3.767	-6.848	1.8	7.816
6Z-MVC-SWG-11	Bus43	59.87	4.130	-6.987	1.7	8.117	57.13	3.764	-6.769	1.8	7.745
6Z-CWS-MFN-01I	Bus43	105.00	0.016	-0.198	12.3	0.198	105.00	0.003	-0.079	30.8	0.080

NACD Ratio = 1.00

# Indicates a fault current contribution from a three-winding transformer.
* Indicates a fault current through a tie circuit breaker.
If the faulted bus is involved in loops formed by protection devices, the short-circuit contributions through these protective devices will not be reported.

Project:		ETAP		Page:	39
Location:		20.6.0C		Date:	04-18-2023
Contract:				SN:	KIEWITRWN9
Engineer:				Revision:	Base
Filename:	GE-Southern	Study Case: SC HL HV		Config.:	Normal

3-phase fault at bus: **FIRE PUMP TAP BUS**

Prefault voltage = 0.504 kV = 105.00 % of nominal bus kV (0.480 kV)
= 102.38 % of base (0.492 kV)

Contribution		1/2 Cycle				
From Bus ID	To Bus ID	% V From Bus	kA Real	kA Imaginary	Imag. /Real	kA Symm. Magnitude
FIRE PUMP TAP BUS	Total	0.00	8.621	-60.095	7.0	60.710
SUS 12 Secondary	FIRE PUMP TAP BUS	4.61	5.768	-53.327	9.2	53.638
6Z-LVB-MCC-121	6Z-LVB-SWG-12	0.64	1.431	-3.394	2.4	3.684
6Z-LVB-MCC-122	6Z-LVB-SWG-12	0.63	1.422	-3.374	2.4	3.661
6Z-LVB-MCC-123	6Z-LVB-SWG-12	0.00	0.000	0.000	999.9	0.000
*6Z-LVB-SWG-12	FIRE PUMP TAP BUS	0.00	2.853	-6.768	2.4	7.345

NACD Ratio = 1.00

# Indicates a fault current contribution from a three-winding transformer.
* Indicates a fault current through a tie circuit breaker.
If the faulted bus is involved in loops formed by protection devices, the short-circuit contributions through these protective devices will not be reported.

Project:		ETAP		Page:	40
Location:		20.6.0C		Date:	04-18-2023
Contract:				SN:	KIEWITRWN9
Engineer:				Revision:	Base
Filename:	GE-Southern		Study Case: SC HL HV	Config.:	Normal

3-phase fault at bus: **HV BUS**

Prefault voltage = 241.500 kV = 105.00 % of nominal bus kV (230.000 kV)
= 105.00 % of base (230.000 kV)

Contribution		1/2 Cycle					1.5 to 4 Cycle				
From Bus ID	To Bus ID	% V From Bus	kA Real	kA Imaginary	Imag. /Real	kA Symm. Magnitude	% V From Bus	kA Real	kA Imaginary	Imag. /Real	kA Symm. Magnitude
HV BUS	Total	0.00	1.845	-53.015	28.7	53.047	0.00	1.831	-52.896	28.9	52.928
MPT X WINDING	HV BUS	49.22	0.036	-0.546	15.1	0.547	38.49	0.021	-0.427	19.9	0.428
U1	HV BUS	105.00	1.809	-52.469	29.0	52.500	105.00	1.809	-52.469	29.0	52.500

NACD Ratio = 1.00

# Indicates a fault current contribution from a three-winding transformer.
* Indicates a fault current through a tie circuit breaker.
If the faulted bus is involved in loops formed by protection devices, the short-circuit contributions through these protective devices will not be reported.

Project:		ETAP		Page:	41
Location:		20.6.0C		Date:	04-18-2023
Contract:				SN:	KIEWITRWN9
Engineer:				Revision:	Base
Filename:	GE-Southern	Study Case: SC HL HV		Config.:	Normal

3-phase fault at bus: **MPT X WINDING**

Prefault voltage = 14.490 kV = 105.00 % of nominal bus kV (13.800 kV)
= 105.00 % of base (13.800 kV)

Contribution		1/2 Cycle					1.5 to 4 Cycle				
From Bus ID	To Bus ID	% V From Bus	kA Real	kA Imaginary	Imag. /Real	kA Symm. Magnitude	% V From Bus	kA Real	kA Imaginary	Imag. /Real	kA Symm. Magnitude
MPT X WINDING	Total	0.00	2.265	-36.085	15.9	36.156	0.00	1.314	-30.250	23.0	30.278
6Z-MVA-SWG-1	MPT X WINDING	0.17	1.621	-17.070	10.5	17.147	0.11	0.669	-11.235	16.8	11.255
IIV BUS	MPT X WINDING	102.72	0.645	-19.015	29.5	19.026	102.72	0.645	-19.015	29.5	19.026

NACD Ratio = 1.00

\# Indicates a fault current contribution from a three-winding transformer.
* Indicates a fault current through a tie circuit breaker.
If the faulted bus is involved in loops formed by protection devices, the short-circuit contributions through these protective devices will not be reported.

Project:		ETAP		Page:	42
Location:		20.6.0C		Date:	04-18-2023
Contract:				SN:	KIEWITRWN9
Engineer:				Revision:	Base
Filename:	GE-Southern		Study Case: SC HL HV	Config.:	Normal

3-phase fault at bus: **SUS 11 Primary**

Prefault voltage = 14.490 kV = 105.00 % of nominal bus kV (13.800 kV)
= 105.00 % of base (13.800 kV)

Contribution		1/2 Cycle					1.5 to 4 Cycle				
From Bus ID	To Bus ID	% V From Bus	kA Real	kA Imaginary	Imag. /Real	kA Symm. Magnitude	% V From Bus	kA Real	kA Imaginary	Imag. /Real	kA Symm. Magnitude
SUS 11 Primary	Total	0.00	2.440	-35.741	14.6	35.825	0.00	1.454	-29.993	20.6	30.028
6Z-MVA-SWG-1	SUS 11 Primary	1.12	2.383	-35.075	14.7	35.156	0.95	1.443	-29.702	20.6	29.737
SUS 11 Secondary	SUS 11 Primary	13.40	0.057	-0.667	11.7	0.669	5.84	0.011	-0.291	27.0	0.292

NACD Ratio = 1.00

# Indicates a fault current contribution from a three-winding transformer.
* Indicates a fault current through a tie circuit breaker.
If the faulted bus is involved in loops formed by protection devices, the short-circuit contributions through these protective devices will not be reported.

Project:		ETAP		Page:	43
Location:		20.6.0C		Date:	04-18-2023
Contract:				SN:	KIEWITRWN9
Engineer:				Revision:	Base
Filename:	GE-Southern	Study Case: SC HL HV		Config.:	Normal

3-phase fault at bus: **SUS 11 Secondary**

Prefault voltage = 4.368 kV = 105.00 % of nominal bus kV (4.160 kV)
= 102.38 % of base (4.267 kV)

Contribution		1/2 Cycle					1.5 to 4 Cycle				
From Bus ID	To Bus ID	% V From Bus	kA Real	kA Imaginary	Imag. /Real	kA Symm. Magnitude	% V From Bus	kA Real	kA Imaginary	Imag. /Real	kA Symm. Magnitude
SUS 11 Secondary	Total	0.00	1.280	-17.076	13.3	17.124	0.00	1.036	-15.304	14.8	15.339
6Z-MVC-SWG-11	SUS 11 Secondary	0.11	0.209	-2.401	11.5	2.410	0.05	0.034	-0.971	28.6	0.972
SUS 11 Primary	SUS 11 Secondary	88.79	1.072	-14.675	13.7	14.714	86.69	1.002	-14.332	14.3	14.367

NACD Ratio = 1.00

# Indicates a fault current contribution from a three-winding transformer.
* Indicates a fault current through a tie circuit breaker.
If the faulted bus is involved in loops formed by protection devices, the short-circuit contributions through these protective devices will not be reported.

Project:		ETAP		Page:	44
Location:		20.6.0C		Date:	04-18-2023
Contract:				SN:	KIEWITRWN9
Engineer:				Revision:	Base
Filename:	GE-Southern	Study Case: SC HL HV		Config.:	Normal

3-phase fault at bus: **SUS 12 Primary**

Prefault voltage = 14.490 kV = 105.00 % of nominal bus kV (13.800 kV)
= 105.00 % of base (13.800 kV)

Contribution		1/2 Cycle					1.5 to 4 Cycle				
From Bus ID	To Bus ID	% V From Bus	kA Real	kA Imaginary	Imag. /Real	kA Symm. Magnitude	% V From Bus	kA Real	kA Imaginary	Imag. /Real	kA Symm. Magnitude
SUS 12 Primary	Total	0.00	2.489	-35.567	14.3	35.654	0.00	1.491	-29.874	20.0	29.911
6Z-MVA-SWG-1	SUS 12 Primary	1.63	2.403	-35.344	14.7	35.425	1.37	1.473	-29.766	20.2	29.802
SUS 12 Secondary	SUS 12 Primary	11.85	0.086	-0.223	2.6	0.239	5.42	0.018	-0.108	6.0	0.109

NACD Ratio = 1.00

\# Indicates a fault current contribution from a three-winding transformer.
* Indicates a fault current through a tie circuit breaker.
If the faulted bus is involved in loops formed by protection devices, the short-circuit contributions through these protective devices will not be reported.

Project:		ETAP		Page:	45
Location:		20.6.0C		Date:	04-18-2023
Contract:				SN:	KIEWITRWN9
Engineer:				Revision:	Base
Filename:	GE-Southern	Study Case: SC HL HV		Config.:	Normal

3-phase fault at bus: **SUS 12 Secondary**

Prefault voltage = 0.504 kV = 105.00 % of nominal bus kV (0.480 kV)
= 102.38 % of base (0.492 kV)

Contribution		1/2 Cycle				
From Bus ID	To Bus ID	% V From Bus	kA Real	kA Imaginary	Imag. /Real	kA Symm. Magnitude
SUS 12 Secondary	Total	0.00	7.976	-62.425	7.8	62.933
FIRE PUMP TAP BUS	SUS 12 Secondary	0.63	2.839	-6.727	2.4	7.301
SUS 12 Primary	SUS 12 Secondary	96.46	5.137	-55.698	10.8	55.935

NACD Ratio = 1.00

# Indicates a fault current contribution from a three-winding transformer.
* Indicates a fault current through a tie circuit breaker.
If the faulted bus is involved in loops formed by protection devices, the short-circuit contributions through these protective devices will not be reported.

Project:		ETAP		Page:	46
Location:		20.6.0C		Date:	04-18-2023
Contract:				SN:	KIEWITRWN9
Engineer:				Revision:	Base
Filename:	GE-Southern	Study Case: SC HL HV		Config.:	Normal

3-phase fault at bus: **SUS 21 PRIMARY**

Prefault voltage = 14.490 kV = 105.00 % of nominal bus kV (13.800 kV)
= 105.00 % of base (13.800 kV)

Contribution		1/2 Cycle					1.5 to 4 Cycle				
From Bus ID	To Bus ID	% V From Bus	kA Real	kA Imaginary	Imag. /Real	kA Symm. Magnitude	% V From Bus	kA Real	kA Imaginary	Imag. /Real	kA Symm. Magnitude
SUS 21 PRIMARY	Total	0.00	4.262	-23.533	5.5	23.916	0.00	3.222	-20.850	6.5	21.098
6Z-MVA-SWG-2	SUS 21 PRIMARY	1.24	4.225	-22.716	5.4	23.106	1.10	3.204	-20.274	6.3	20.526
SUS 21 SECONDARY	SUS 21 PRIMARY	16.37	0.038	-0.817	21.8	0.818	11.54	0.019	-0.576	30.9	0.576

NACD Ratio = 1.00

# Indicates a fault current contribution from a three-winding transformer.
* Indicates a fault current through a tie circuit breaker.
If the faulted bus is involved in loops formed by protection devices, the short-circuit contributions through these protective devices will not be reported.

Project:		ETAP		Page:	47
Location:		20.6.0C		Date:	04-18-2023
Contract:				SN:	KIEWITRWN9
Engineer:				Revision:	Base
Filename:	GE-Southern		Study Case: SC HL HV	Config.:	Normal

3-phase fault at bus: **SUS 21 SECONDARY**

Prefault voltage = 4.368 kV = 105.00 % of nominal bus kV (4.160 kV)
= 102.38 % of base (4.267 kV)

Contribution		1/2 Cycle					1.5 to 4 Cycle				
From Bus ID	To Bus ID	% V From Bus	kA Real	kA Imaginary	Imag. /Real	kA Symm. Magnitude	% V From Bus	kA Real	kA Imaginary	Imag. /Real	kA Symm. Magnitude
SUS 21 SECONDARY	Total	0.00	1.424	-16.751	11.8	16.811	0.00	1.277	-15.429	12.1	15.482
6Z-MVC-SWG-21	SUS 21 SECONDARY	0.10	0.124	-3.038	24.4	3.040	0.06	0.056	-2.034	36.5	2.035
SUS 21 PRIMARY	SUS 21 SECONDARY	83.12	1.299	-13.713	10.6	13.774	81.16	1.221	-13.395	11.0	13.450

NACD Ratio = 1.00

# Indicates a fault current contribution from a three-winding transformer.
* Indicates a fault current through a tie circuit breaker.
If the faulted bus is involved in loops formed by protection devices, the short-circuit contributions through these protective devices will not be reported.

Project:		ETAP		Page:	48
Location:		20.6.0C		Date:	04-18-2023
Contract:				SN:	KIEWITRWN9
Engineer:				Revision:	Base
Filename:	GE-Southern	Study Case: SC HL HV		Config.:	Normal

3-phase fault at bus: **SUS 22 PRIMARY**

Prefault voltage = 14.490 kV = 105.00 % of nominal bus kV (13.800 kV)
= 105.00 % of base (13.800 kV)

Contribution		1/2 Cycle					1.5 to 4 Cycle				
From Bus ID	To Bus ID	% V From Bus	kA Real	kA Imaginary	Imag. /Real	kA Symm. Magnitude	% V From Bus	kA Real	kA Imaginary	Imag. /Real	kA Symm. Magnitude
SUS 22 PRIMARY	Total	0.00	4.350	-23.520	5.4	23.919	0.00	3.290	-20.844	6.3	21.102
6Z-MVA-SWG-2	SUS 22 PRIMARY	1.34	4.246	-23.243	5.5	23.627	1.19	3.268	-20.708	6.3	20.964
SUS 22 SECONDARY	SUS 22 PRIMARY	14.72	0.104	-0.278	2.7	0.297	6.85	0.023	-0.136	6.0	0.138

NACD Ratio = 1.00

# Indicates a fault current contribution from a three-winding transformer.
* Indicates a fault current through a tie circuit breaker.
If the faulted bus is involved in loops formed by protection devices, the short-circuit contributions through these protective devices will not be reported.

Project:		ETAP		Page:	49
Location:		20.6.0C		Date:	04-18-2023
Contract:				SN:	KIEWITRWN9
Engineer:				Revision:	Base
Filename:	GE-Southern	Study Case: SC HL HV		Config.:	Normal

3-phase fault at bus: **SUS 22 SECONDARY**

Prefault voltage = 0.504 kV = 105.00 % of nominal bus kV (0.480 kV)
= 102.38 % of base (0.492 kV)

Contribution		1/2 Cycle				
From Bus ID	To Bus ID	% V From Bus	kA Real	kA Imaginary	Imag. /Real	kA Symm. Magnitude
SUS 22 SECONDARY	Total	0.00	9.109	-62.704	6.9	63.362
6Z-LVB-SWG-22	SUS 22 SECONDARY	0.76	3.638	-8.598	2.4	9.336
SUS 22 PRIMARY	SUS 22 SECONDARY	93.78	5.472	-54.105	9.9	54.381

NACD Ratio = 1.00

\# Indicates a fault current contribution from a three-winding transformer.
* Indicates a fault current through a tie circuit breaker.
If the faulted bus is involved in loops formed by protection devices, the short-circuit contributions through these protective devices will not be reported.

Project:		ETAP		Page:	50
Location:		20.6.0C		Date:	04-18-2023
Contract:				SN:	KIEWITRWN9
Engineer:				Revision:	Base
Filename:	GE-Southern	Study Case: SC HL HV		Config.:	Normal

Load Terminal Fault Short-Circuit Current - 1/2 Cycle

Bus ID	Load ID	Load Type	Load kV	Load HP/kW	Load kVA	Feeder Z (ohm) Heater & Cable R	Feeder Z (ohm) Cable X	1/2 Cycle Short-Circuit Current kA Symmetrical System	1/2 Cycle Short-Circuit Current kA Symmetrical Load	1/2 Cycle Short-Circuit Current kA Symmetrical Total
Bus2	6Z-CWS-MFN-01J	Ind. Motor	4.000	250.00	242.34	0.00000	0.00000	8.12	0.198	8.295
Bus6	6Z-CWS-MPM-01A	Ind. Motor	13.200	5500.00	4665.19	0.00000	0.00000	28.39	1.392	29.775
Bus8	DCC BLOWER #1	Ind. Motor	4.000	1750.00	1501.29	0.00000	0.00000	13.75	1.537	15.274
Bus9	DCC BLOWER #2	Ind. Motor	4.000	1750.00	1501.29	0.00000	0.00000	13.75	1.537	15.274
Bus18	6Z-CWS-MFN-01A	Ind. Motor	4.000	250.00	242.34	0.00000	0.00000	9.52	0.198	9.709
Bus20	6Z-CWS-MFN-01B	Ind. Motor	4.000	250.00	242.34	0.00000	0.00000	9.52	0.198	9.709
Bus21	6Z-CWS-MFN-01C	Ind. Motor	4.000	250.00	242.34	0.00000	0.00000	9.26	0.198	9.444
Bus22	6Z-CWS-MFN-01E	Ind. Motor	4.000	250.00	242.34	0.00000	0.00000	9.01	0.198	9.192
Bus23	6Z-CWS-MFN-01F	Ind. Motor	4.000	250.00	242.34	0.00000	0.00000	9.01	0.198	9.192
Bus24	6Z-CWS-MFN-01G	Ind. Motor	4.000	250.00	242.34	0.00000	0.00000	8.77	0.198	8.951
Bus25	6Z-CWS-MFN-01H	Ind. Motor	4.000	250.00	242.34	0.00000	0.00000	8.77	0.198	8.951
Bus26	6Z-CWS-MFN-01D	Ind. Motor	4.000	250.00	242.34	0.00000	0.00000	9.26	0.198	9.444
Bus28	6Z-CWS-MPM-01B	Ind. Motor	13.200	5500.00	4665.19	0.00000	0.00000	28.39	1.392	29.775
Bus29	6Z-CWS-MPM-02	Ind. Motor	4.000	500.00	434.37	0.00000	0.00000	11.35	0.356	11.691
Bus43	6Z-CWS-MFN-01I	Ind. Motor	4.000	250.00	242.34	0.00000	0.00000	8.12	0.198	8.295

* The terminal short-circuit current of the single-phase loads is calculated in the Panel/UPS/1Ph System Device Duty calculation.

Project:		ETAP		Page:	51
Location:		20.6.0C		Date:	04-18-2023
Contract:				SN:	KIEWITRWN9
Engineer:				Revision:	Base
Filename:	GE-Southern	Study Case: SC HL HV		Config.:	Normal

Load Terminal Fault Short-Circuit Current - 1.5 to 4 Cycle

Bus ID	Load ID	Load Type	kV	HP/kW	kVA	Feeder Z (ohm) Heater & Cable R	Feeder Z (ohm) Cable X	1.5 to 4 Cycle Short-Circuit Current kA Symmetrical System	Load	Total
Bus2	6Z-CWS-MFN-01J	Ind. Motor	4.000	250.00	242.34	0.00000	0.00000	7.744	0.079	7.816
Bus6	6Z-CWS-MPM-01A	Ind. Motor	13.200	5500.00	4665.19	0.00000	0.00000	24.536	0.928	25.462
Bus8	DCC BLOWER #1	Ind. Motor	4.000	1750.00	1501.29	0.00000	0.00000	13.073	1.025	14.092
Bus9	DCC BLOWER #2	Ind. Motor	4.000	1750.00	1501.29	0.00000	0.00000	13.073	1.025	14.092
Bus18	6Z-CWS-MFN-01A	Ind. Motor	4.000	250.00	242.34	0.00000	0.00000	8.998	0.079	9.073
Bus20	6Z-CWS-MFN-01B	Ind. Motor	4.000	250.00	242.34	0.00000	0.00000	8.998	0.079	9.073
Bus21	6Z-CWS-MFN-01C	Ind. Motor	4.000	250.00	242.34	0.00000	0.00000	8.765	0.079	8.839
Bus22	6Z-CWS-MFN-01E	Ind. Motor	4.000	250.00	242.34	0.00000	0.00000	8.542	0.079	8.616
Bus23	6Z-CWS-MFN-01F	Ind. Motor	4.000	250.00	242.34	0.00000	0.00000	8.542	0.079	8.616
Bus24	6Z-CWS-MFN-01G	Ind. Motor	4.000	250.00	242.34	0.00000	0.00000	8.329	0.079	8.403
Bus25	6Z-CWS-MFN-01H	Ind. Motor	4.000	250.00	242.34	0.00000	0.00000	8.329	0.079	8.403
Bus26	6Z-CWS-MFN-01D	Ind. Motor	4.000	250.00	242.34	0.00000	0.00000	8.765	0.079	8.839
Bus28	6Z-CWS-MPM-01B	Ind. Motor	13.200	5500.00	4665.19	0.00000	0.00000	24.536	0.928	25.462
Bus29	6Z-CWS-MPM-02	Ind. Motor	4.000	500.00	434.37	0.00000	0.00000	10.615	0.142	10.752
Bus43	6Z-CWS-MFN-01I	Ind. Motor	4.000	250.00	242.34	0.00000	0.00000	7.744	0.079	7.816

* The terminal short-circuit current of the single-phase loads is calculated in the Panel/UPS/1Ph System Device Duty calculation.

Project:		ETAP		Page:	52
Location:		20.6.0C		Date:	04-18-2023
Contract:				SN:	KIEWITRWN9
Engineer:				Revision:	Base
Filename:	GE-Southern		Study Case: SC HL HV	Config.:	Normal

Momentary Duty Summary Report

3-Phase Fault Currents: (Prefault Voltage = 105 % of the Bus Nominal Voltage)

Bus		Device		Momentary Duty					Device Capability		
ID	kV	ID	Type	Symm. kA rms	X/R Ratio	M.F.	Asymm. kA rms	Asymm. kA Peak	Symm. kA rms	Asymm. kA rms	Asymm. kA Peak
6Z-LVB-MCC-121	0.480	6Z-LVB-MCC-121	MCC	56.305	6.2	1.313	73.922	127.526	65.000	81.100 #	
6Z-LVB-MCC-122	0.480	6Z-LVB-MCC-122	MCC	56.301	6.2	1.313	73.917	127.516	65.000	81.100 #	
6Z-LVB-MCC-123	0.480	6Z-LVB-MCC-123	MCC	55.663	6.2	1.312	73.012	125.968	65.000	81.100 #	
6Z-LVB-MCC-221	0.480	6Z-LVB-MCC-221	MCC	57.266	5.7	1.291	73.903	127.701	65.000	81.100 #	
6Z-LVB-MCC-222	0.480	6Z-LVB-MCC-222	MCC	57.266	5.7	1.291	73.903	127.701	65.000	81.100 #	
6Z-LVB-SWG-12	0.480	6Z-LVB-SWG-12	Switchgear	60.710	8.4	1.396	84.746	144.985	65.000 #	86.500 #	
6Z-LVB-SWG-22	0.480	6Z-LVB-SWG-22	Switchgear	61.429	7.6	1.371	84.199	144.459	65.000 #	86.500 #	
6Z-MVA-SWG-1	13.800	6Z-MVA-SWG-1	Switchgear	36.151	21.7	1.580	57.130	95.363		77.000	129.900
6Z-MVA-SWG-2	13.800	6Z-MVA-SWG-2	Switchgear	24.186	6.3	1.320	31.919	55.033		77.000	129.900
6Z-MVC-SWG-11	4.160	6Z-MVC-SWG-11	Switchgear	17.037	13.4	1.501	25.570	43.161		39.000	65.810
6Z-MVC-SWG-21	4.160	6Z-MVC-SWG-21	MCC	16.766	13.1	1.496	25.083	42.366		39.000	65.810
Bus2	4.000	Bus2	Bus	8.295	1.9	1.037	8.601	14.005			
Bus6	13.200	Bus6	Bus	29.775	11.2	1.462	43.542	73.879			
Bus7	13.800	Bus7	Bus	36.100	20.8	1.574	56.831	94.946			
Bus8	4.160	Bus8	Bus	15.274	9.4	1.424	21.751	37.087			
Bus9	4.160	Bus9	Bus	15.274	9.4	1.424	21.751	37.087			
Bus18	4.000	Bus18	Bus	9.709	2.2	1.056	10.251	17.020			
Bus20	4.000	Bus20	Bus	9.709	2.2	1.056	10.251	17.020			
Bus21	4.000	Bus21	Bus	9.444	2.1	1.052	9.931	16.427			
Bus22	4.000	Bus22	Bus	9.192	2.1	1.048	9.631	15.875			
Bus23	4.000	Bus23	Bus	9.192	2.1	1.048	9.631	15.875			
Bus24	4.000	Bus24	Bus	8.951	2.0	1.045	9.350	15.361			
Bus25	4.000	Bus25	Bus	8.951	2.0	1.045	9.350	15.361			
Bus26	4.000	Bus26	Bus	9.444	2.1	1.052	9.931	16.427			
Bus28	13.200	Bus28	Bus	29.775	11.2	1.462	43.542	73.879			
Bus29	4.000	Bus29	Bus	11.691	3.1	1.122	13.123	22.494			
Bus43	4.000	Bus43	Bus	8.295	1.9	1.037	8.601	14.005			
FIRE PUMP TAP BUS	0.480	FIRE PUMP TAP BUS	Bus	60.710	8.4	1.396	84.746	144.985			
HV BUS	230.000	HV BUS	Bus	53.047	28.9	1.615	85.684	142.309			
MPT X WINDING	13.800	MPT X WINDING	Bus	36.156	22.0	1.582	57.205	95.462			
SUS 11 Primary	13.800	SUS 11 Primary	Bus	35.825	19.4	1.564	56.027	93.740			
SUS 11 Secondary	4.160	SUS 11 Secondary	Bus	17.124	13.8	1.506	25.786	43.496			

Project:	ETAP	Page:	53
Location:	20.6.0C	Date:	04-18-2023
Contract:		SN:	KIEWITRWN9
Engineer:	Study Case: SC HL HV	Revision:	Base
Filename: GE-Southern		Config.:	Normal

3-Phase Fault Currents: (Prefault Voltage = 105 % of the Bus Nominal Voltage)

Bus		Device		Momentary Duty					Device Capability		
ID	kV	ID	Type	Symm. kA rms	X/R Ratio	M.F.	Asymm. kA rms	Asymm. kA Peak	Symm. kA rms	Asymm. kA rms	Asymm. kA Peak
SUS 12 Primary	13.800	SUS 12 Primary	Bus	35.654	18.7	1.559	55.580	93.060			
SUS 12 Secondary	0.480	SUS 12 Secondary	Bus	62.933	9.9	1.435	90.307	153.768			
SUS 21 PRIMARY	13.800	SUS 21 PRIMARY	Bus	23.916	6.3	1.316	31.476	54.286			
SUS 21 SECONDARY	4.160	SUS 21 SECONDARY	Bus	16.811	13.2	1.498	25.187	42.530			
SUS 22 PRIMARY	13.800	SUS 22 PRIMARY	Bus	23.919	6.1	1.308	31.292	54.003			
SUS 22 SECONDARY	0.480	SUS 22 SECONDARY	Bus	63.362	8.8	1.408	89.228	152.432			

- Method: IEEE - X/R is calculated from separate R & X networks.
- Protective device duty is calculated based on maximum through fault current.

- The multiplication factors for high voltage circuit-breaker and high voltage bus momentary duty (asymmetrical and crest values) are calculated based on system X/R.

* Indicates a device with momentary duty exceeding the device capability.
\# Indicates a device with momentary duty exceeding the device marginal limit (90% times the device capability).

Project:		ETAP		Page:	54
Location:		20.6.0C		Date:	04-18-2023
Contract:				SN:	KIEWITRWN9
Engineer:				Revision:	Base
Filename:	GE-Southern	Study Case: SC HL HV		Config.:	Normal

Interrupting Duty Summary Report

3-Phase Fault Currents: (Prefault Voltage = 105 % of the Bus Nominal Voltage)

Bus		Device			Interrupting Duty				Device Capability			
ID	kV	ID	Type	CPT (Cy)	Symm. kA rms	X/R Ratio	M.F.	Adj. Sym. kA rms	kV	Test PF	Rated Int.	Adjusted Int.
6Z-LVB-MCC-121	0.480				56.305	6.2						
6Z-LVB-MCC-122	0.480				56.301	6.2						
6Z-LVB-MCC-123	0.480				55.663	6.2						
6Z-LVB-MCC-221	0.480				57.266	5.7						
6Z-LVB-MCC-222	0.480				57.266	5.7						
6Z-LVB-SWG-12	0.480				60.710	8.4						
6Z-LVB-SWG-22	0.480				61.429	7.6						
6Z-MVA-SWG-1	13.800				30.259	23.4						
6Z-MVA-SWG-2	13.800				21.309	6.9						
6Z-MVC-SWG-11	4.160				15.254	13.8						
6Z-MVC-SWG-21	4.160				15.438	12.7						
Bus2	4.000				7.816	1.9						
Bus6	13.200				25.462	12.1						
Bus7	13.800				30.206	22.4						
Bus8	4.160				14.092	8.9						
Bus9	4.160				14.092	8.9						
Bus18	4.000				9.073	2.2						
Bus20	4.000				9.073	2.2						
Bus21	4.000				8.839	2.1						
Bus22	4.000				8.616	2.1						
Bus23	4.000				8.616	2.1						
Bus24	4.000				8.403	2.0						
Bus25	4.000				8.403	2.0						
Bus26	4.000				8.839	2.1						
Bus28	13.200				25.462	12.1						
Bus29	4.000				10.752	3.0						
Bus43	4.000				7.816	1.9						
FIRE PUMP TAP BUS	0.480				60.710	8.4						
HV BUS	230.000				52.928	28.9						
MPT X WINDING	13.800				30.278	23.8						
SUS 11 Primary	13.800				30.028	21.1						
SUS 11 Secondary	4.160				15.339	14.2						

Project:		**ETAP**		Page:	55
Location:		20.6.0C		Date:	04-18-2023
Contract:				SN:	KIEWITRWN9
Engineer:				Revision:	Base
Filename:	GE-Southern	Study Case: SC HL HV		Config.:	Normal

3-Phase Fault Currents: (Prefault Voltage = 105 % of the Bus Nominal Voltage)

Bus		Device			Interrupting Duty				Device Capability			
ID	kV	ID	Type	CPT (Cy)	Symm. kA rms	X/R Ratio	M.F.	Adj. Sym. kA rms	kV	Test PF	Rated Int.	Adjusted Int.
SUS 12 Primary	13.800				29.911	20.5						
SUS 12 Secondary	0.480				62.933	9.9						
SUS 21 PRIMARY	13.800				21.098	6.8						
SUS 21 SECONDARY	4.160				15.482	12.9						
SUS 22 PRIMARY	13.800				21.102	6.6						
SUS 22 SECONDARY	0.480				63.362	8.8						

- Method: IEEE - X/R is calculated from separate R & X networks.
- HV CB interrupting capability is adjusted based on bus nominal voltage.
- Short-circuit multiplying factor for LV Molded Case and Insulated Case Circuit Breakers is the higher value based on peak current or asymmetrical current.
- Protective device duty is calculated based on maximum through fault current.

* Indicates a device with interrupting duty exceeding the device capability
** Indicates that the circuit breaker has been flagged as a generator circuit breaker. However, ETAP could not detect a single path, without a transformer, to the specified generator. Therefore, this circuit breaker is treated as a regular circuit breaker in short-circuit calculations.
\+ The prefault voltage exceeds the rated maximum kV limit of the circuit breaker - The rated interrupting kA must be derated.
\# Indicates a device with interrupting duty exceeding the device marginal limit (90% times the device capability).

APPENDICES

PROJECT: GE/Southern/Linde Advanced NGCC Integration
JOB NUMBER: 20041223

CALC NO CA-ELE-002

SUBJECT ELECTRICAL SYSTEMS ANALYSIS

BY Nick Mechler **DATE** 4/21/2023 **SHEET REV** 0

APPENDIX G

Description	No. of Pages
Motor Starting Study Reports	9

Project:	**ETAP** 20.6.0C	Page:	1
Location:		Date:	04-18-2023
Contract:		SN:	KIEWITRWN9
Engineer:		Revision:	Base
Filename: GE-Southern	Study Case: **MS-CIRWAT**	Config.:	Normal

LOAD FLOW REPORT @ T = 0.000-

Bus		Voltage		Generation		Load		Load Flow					XFMR
ID	kV	% Mag.	Ang.	MW	Mvar	MW	Mvar	ID	MW	Mvar	Amp	% PF	% Tap
6Z-LVB-MCC-121	0.480	96.930	-11.2	0	0	1.015	0.603	6Z-LVB-SWG-12	-1.015	-0.603	1465.2	86.0	
6Z-LVB-MCC-122	0.480	96.932	-11.2	0	0	1.009	0.599	6Z-LVB-SWG-12	-1.009	-0.599	1456.3	86.0	
6Z-LVB-MCC-123	0.480	97.025	-11.3	0	0	0.863	0.175	6Z-LVB-SWG-12	-0.863	-0.175	1091.5	98.0	
6Z-LVB-MCC-221	0.480	97.019	-10.1	0	0	1.004	0.680	6Z-LVB-SWG-22	-1.004	-0.680	1503.9	82.8	
6Z-LVB-MCC-222	0.480	97.019	-10.1	0	0	1.004	0.680	6Z-LVB-SWG-22	-1.004	-0.680	1503.9	82.8	
6Z-LVB-SWG-12	0.480	97.160	-11.2	0	0	0	0	6Z-LVB-MCC-121	1.017	0.605	1465.2	85.9	
								6Z-LVB-MCC-122	1.011	0.601	1456.3	85.9	
								6Z-LVB-MCC-123	0.864	0.177	1091.5	98.0	
								FIRE PUMP TAP BUS	-2.892	-1.383	3968.6	90.2	
6Z-LVB-SWG-22	0.480	97.256	-10.0	0	0	0	0	SUS 22 SECONDARY	-2.013	-1.365	3007.7	82.8	
								6Z-LVB-MCC-221	1.006	0.683	1503.9	82.8	
								6Z-LVB-MCC-222	1.006	0.683	1503.9	82.8	
6Z-MVA-SWG-1	13.800	99.333	-7.1	0	0	0	0	Bus6	0.000	0.000	0.0	0.0	
								Bus28	4.344	1.711	196.6	93.0	
								MPT X WINDING	-52.073	-30.986	2552.1	85.9	
								6Z-MVA-SWG-2	5.532	3.116	267.4	87.1	
								SUS 11 Primary	2.401	1.638	122.4	82.6	
								SUS 12 Primary	2.922	1.661	141.6	86.9	
								Bus7	36.874	22.859	1827.3	85.0	
6Z-MVA-SWG-2	13.800	98.992	-7.3	0	0	0	0	6Z-MVA-SWG-1	-5.521	-3.091	267.4	87.3	
								SUS 21 PRIMARY	3.491	1.566	161.7	91.2	
								SUS 22 PRIMARY	2.030	1.525	107.3	80.0	
6Z-MVC-SWG-11	4.160	100.113	-8.4	0	0	0	0	Bus18	0.199	0.139	33.7	82.1	
								Bus20	0.199	0.139	33.7	82.1	
								Bus21	0.199	0.139	33.7	82.1	
								Bus26	0.199	0.139	33.7	82.1	
								Bus22	0.199	0.139	33.7	82.1	
								Bus23	0.199	0.139	33.7	82.1	
								Bus24	0.199	0.139	33.7	82.1	
								Bus25	0.199	0.139	33.7	82.1	
								Bus43	0.199	0.139	33.7	82.1	
								Bus2	0.199	0.139	33.7	82.1	
								Bus29	0.401	0.170	60.3	92.1	
								SUS 11 Secondary	-2.394	-1.557	395.9	83.8	
6Z-MVC-SWG-21	4.160	99.777	-9.2	0	0	0	0	SUS 21 SECONDARY	-3.480	-1.424	523.0	92.6	
								Bus8	1.740	0.712	261.5	92.6	

Project:	**ETAP** 20.6.0C	Page:	2
Location:		Date:	04-18-2023
Contract:		SN:	KIEWITRWN9
Engineer:		Revision:	Base
Filename: GE-Southern	Study Case: **MS-CIRWAT**	Config.:	Normal

LOAD FLOW REPORT @ T = 0.000-

Bus		Voltage		Generation		Load		Load Flow					XFMR
ID	kV	% Mag.	Ang.	MW	Mvar	MW	Mvar	ID	MW	Mvar	Amp	% PF	% Tap
								Bus9	1.740	0.712	261.5	92.6	
Bus2	4.000	103.859	-8.4	0	0	0.199	0.138	6Z-MVC-SWG-11	-0.199	-0.138	33.7	82.1	
Bus6	13.200	103.849	-7.1	0	0	0	0	6Z-MVA-SWG-1	0.000	0.000	0.0	0.0	
Bus7	13.800	99.307	-7.1	0	0	36.867	22.848	6Z-MVA-SWG-1	-36.867	-22.848	1827.3	85.0	
Bus8	4.160	99.593	-9.3	0	0	1.738	0.708	6Z-MVC-SWG-21	-1.738	-0.708	261.5	92.6	
Bus9	4.160	99.593	-9.3	0	0	1.738	0.708	6Z-MVC-SWG-21	-1.738	-0.708	261.5	92.6	
Bus18	4.000	103.929	-8.4	0	0	0.199	0.138	6Z-MVC-SWG-11	-0.199	-0.138	33.7	82.1	
Bus20	4.000	103.929	-8.4	0	0	0.199	0.138	6Z-MVC-SWG-11	-0.199	-0.138	33.7	82.1	
Bus21	4.000	103.918	-8.4	0	0	0.199	0.138	6Z-MVC-SWG-11	-0.199	-0.138	33.7	82.1	
Bus22	4.000	103.906	-8.4	0	0	0.199	0.138	6Z-MVC-SWG-11	-0.199	-0.138	33.7	82.1	
Bus23	4.000	103.906	-8.4	0	0	0.199	0.138	6Z-MVC-SWG-11	-0.199	-0.138	33.7	82.1	
Bus24	4.000	103.894	-8.4	0	0	0.199	0.138	6Z-MVC-SWG-11	-0.199	-0.138	33.7	82.1	
Bus25	4.000	103.894	-8.4	0	0	0.199	0.138	6Z-MVC-SWG-11	-0.199	-0.138	33.7	82.1	
Bus26	4.000	103.918	-8.4	0	0	0.199	0.138	6Z-MVC-SWG-11	-0.199	-0.138	33.7	82.1	
Bus28	13.200	103.771	-7.2	0	0	4.342	1.706	6Z-MVA-SWG-1	-4.342	-1.706	196.6	93.1	
Bus29	4.000	103.913	-8.4	0	0	0.400	0.169	6Z-MVC-SWG-11	-0.400	-0.169	60.3	92.1	
Bus43	4.000	103.859	-8.4	0	0	0.199	0.138	6Z-MVC-SWG-11	-0.199	-0.138	33.7	82.1	
FIRE PUMP TAP BUS	0.480	97.160	-11.2	0	0	0	0	SUS 12 Secondary	-2.892	-1.383	3968.6	90.2	
								6Z-LVB-SWG-12	2.892	1.383	3968.6	90.2	
* HV BUS	230.000	100.000	0.0	0	0	0	0	MPT X WINDING	52.411	40.761	166.7	78.9	-8.125
								U1	-52.411	-40.761	166.7	78.9	
MPT X WINDING	13.800	99.355	-7.1	0	0	0	0	6Z-MVA-SWG-1	52.080	30.999	2552.1	85.9	
								HV BUS	-52.080	-30.999	2552.1	85.9	
SUS 11 Primary	13.800	99.330	-7.1	0	0	0	0	6Z-MVA-SWG-1	-2.400	-1.638	122.4	82.6	
								SUS 11 Secondary	2.400	1.638	122.4	82.6	-2.500
SUS 11 Secondary	4.160	100.128	-8.4	0	0	0	0	6Z-MVC-SWG-11	2.394	1.557	395.9	83.8	
								SUS 11 Primary	-2.394	-1.557	395.9	83.8	
SUS 12 Primary	13.800	99.328	-7.1	0	0	0	0	6Z-MVA-SWG-1	-2.922	-1.661	141.6	86.9	
								SUS 12 Secondary	2.922	1.661	141.6	86.9	-2.500
SUS 12 Secondary	0.480	97.428	-11.1	0	0	0	0	FIRE PUMP TAP BUS	2.897	1.393	3968.6	90.1	
								SUS 12 Primary	-2.897	-1.393	3968.6	90.1	
SUS 21 PRIMARY	13.800	98.986	-7.3	0	0	0	0	6Z-MVA-SWG-2	-3.491	-1.566	161.7	91.2	
								SUS 21 SECONDARY	3.491	1.566	161.7	91.2	-2.500
SUS 21 SECONDARY	4.160	99.791	-9.2	0	0	0	0	6Z-MVC-SWG-21	3.481	1.424	523.0	92.6	
								SUS 21 PRIMARY	-3.481	-1.424	523.0	92.6	
SUS 22 PRIMARY	13.800	98.986	-7.3	0	0	0	0	6Z-MVA-SWG-2	-2.030	-1.525	107.3	80.0	

Project:	ETAP 20.6.0C	Page:	3
Location:		Date:	04-18-2023
Contract:		SN:	KIEWITRWN9
Engineer:		Revision:	Base
Filename: GE-Southern	Study Case: MS-CIRWAT	Config.:	Normal

LOAD FLOW REPORT @ T = 0.000-

Bus		Voltage		Generation		Load		Load Flow					XFMR
ID	kV	% Mag.	Ang.	MW	Mvar	MW	Mvar	ID	MW	Mvar	Amp	% PF	% Tap
								SUS 22 SECONDARY	2.030	1.525	107.3	80.0	-2.500
SUS 22 SECONDARY	0.480	97.474	-10.0	0	0	0	0	6Z-LVB-SWG-22	2.015	1.371	3007.7	82.7	
								SUS 22 PRIMARY	-2.015	-1.371	3007.7	82.7	
* U1	230.000	100.214	0.1	52.418	40.982	0	0	HV BUS	52.418	40.982	166.7	78.8	

* Indicates a voltage regulated bus (voltage-controlled or swing type machine connected to it).

Project:	**ETAP** 20.6.0C	Page:	4
Location:		Date:	04-18-2023
Contract:		SN:	KIEWITRWN9
Engineer:		Revision:	Base
Filename: GE-Southern	Study Case: **MS-CIRWAT**	Config.:	Normal

LOAD FLOW REPORT @ T = 0.200+

Bus		Voltage		Generation		Load		Load Flow					XFMR
ID	kV	% Mag.	Ang.	MW	Mvar	MW	Mvar	ID	MW	Mvar	Amp	% PF	% Tap
6Z-LVB-MCC-121	0.480	87.493	-12.6	0	0	0.954	0.566	6Z-LVB-SWG-12	-0.954	-0.566	1525.1	86.0	
6Z-LVB-MCC-122	0.480	87.494	-12.6	0	0	0.948	0.563	6Z-LVB-SWG-12	-0.948	-0.563	1515.9	86.0	
6Z-LVB-MCC-123	0.480	87.610	-12.6	0	0	0.704	0.143	6Z-LVB-SWG-12	-0.704	-0.143	985.6	98.0	
6Z-LVB-MCC-221	0.480	87.293	-11.6	0	0	0.973	0.659	6Z-LVB-SWG-22	-0.973	-0.659	1620.0	82.8	
6Z-LVB-MCC-222	0.480	87.293	-11.6	0	0	0.973	0.659	6Z-LVB-SWG-22	-0.973	-0.659	1620.0	82.8	
6Z-LVB-SWG-12	0.480	87.732	-12.5	0	0	0	0	6Z-LVB-MCC-121	0.956	0.569	1525.1	85.9	
								6Z-LVB-MCC-122	0.950	0.565	1515.9	85.9	
								6Z-LVB-MCC-123	0.704	0.144	985.6	98.0	
								FIRE PUMP TAP BUS	-2.610	-1.278	3985.1	89.8	
6Z-LVB-SWG-22	0.480	87.549	-11.5	0	0	0	0	SUS 22 SECONDARY	-1.951	-1.324	3240.0	82.7	
								6Z-LVB-MCC-221	0.976	0.662	1620.0	82.7	
								6Z-LVB-MCC-222	0.976	0.662	1620.0	82.7	
6Z-MVA-SWG-1	13.800	90.249	-8.1	0	0	0	0	Bus6	2.664	26.671	1242.5	9.9	
								Bus28	4.344	1.712	216.5	93.0	
								MPT X WINDING	-54.406	-57.599	3673.0	68.7	
								6Z-MVA-SWG-2	5.479	3.139	292.7	86.8	
								SUS 11 Primary	2.403	1.657	135.3	82.3	
								SUS 12 Primary	2.641	1.559	142.2	86.1	
								Bus7	36.876	22.861	2011.3	85.0	
6Z-MVA-SWG-2	13.800	89.873	-8.3	0	0	0	0	6Z-MVA-SWG-1	-5.466	-3.109	292.7	86.9	
								SUS 21 PRIMARY	3.495	1.599	178.9	90.9	
								SUS 22 PRIMARY	1.972	1.509	115.6	79.4	
6Z-MVC-SWG-11	4.160	90.602	-9.6	0	0	0	0	Bus18	0.199	0.139	37.2	82.1	
								Bus20	0.199	0.139	37.2	82.1	
								Bus21	0.199	0.139	37.2	82.1	
								Bus26	0.199	0.139	37.2	82.1	
								Bus22	0.199	0.139	37.2	82.1	
								Bus23	0.199	0.139	37.2	82.1	
								Bus24	0.199	0.139	37.2	82.1	
								Bus25	0.199	0.139	37.2	82.1	
								Bus43	0.200	0.139	37.2	82.1	
								Bus2	0.200	0.139	37.2	82.1	
								Bus29	0.401	0.170	66.7	92.1	
								SUS 11 Secondary	-2.395	-1.557	437.7	83.8	
6Z-MVC-SWG-21	4.160	90.222	-10.6	0	0	0	0	SUS 21 SECONDARY	-3.481	-1.425	578.7	92.5	
								Bus8	1.741	0.713	289.3	92.5	

Project:	**ETAP** 20.6.0C	Page:	5
Location:		Date:	04-18-2023
Contract:		SN:	KIEWITRWN9
Engineer:		Revision:	Base
Filename: GE-Southern	Study Case: **MS-CIRWAT**	Config.:	Normal

LOAD FLOW REPORT @ T = 0.200+

Bus		Voltage		Generation		Load		Load Flow					XFMR
ID	kV	% Mag.	Ang.	MW	Mvar	MW	Mvar	ID	MW	Mvar	Amp	% PF	% Tap
								Bus9	1.741	0.713	289.3	92.5	
Bus2	4.000	93.941	-9.6	0	0	0.199	0.138	6Z-MVC-SWG-11	-0.199	-0.138	37.2	82.1	
Bus6	13.200	93.683	-8.0	0	0	2.586	26.488	6Z-MVA-SWG-1	-2.586	-26.488	1242.5	9.7	
Bus7	13.800	90.219	-8.1	0	0	36.867	22.848	6Z-MVA-SWG-1	-36.867	-22.848	2011.3	85.0	
Bus8	4.160	90.019	-10.7	0	0	1.738	0.708	6Z-MVC-SWG-21	-1.738	-0.708	289.3	92.6	
Bus9	4.160	90.019	-10.7	0	0	1.738	0.708	6Z-MVC-SWG-21	-1.738	-0.708	289.3	92.6	
Bus18	4.000	94.019	-9.6	0	0	0.199	0.138	6Z-MVC-SWG-11	-0.199	-0.138	37.2	82.1	
Bus20	4.000	94.019	-9.6	0	0	0.199	0.138	6Z-MVC-SWG-11	-0.199	-0.138	37.2	82.1	
Bus21	4.000	94.006	-9.6	0	0	0.199	0.138	6Z-MVC-SWG-11	-0.199	-0.138	37.2	82.1	
Bus22	4.000	93.993	-9.6	0	0	0.199	0.138	6Z-MVC-SWG-11	-0.199	-0.138	37.2	82.1	
Bus23	4.000	93.993	-9.6	0	0	0.199	0.138	6Z-MVC-SWG-11	-0.199	-0.138	37.2	82.1	
Bus24	4.000	93.980	-9.6	0	0	0.199	0.138	6Z-MVC-SWG-11	-0.199	-0.138	37.2	82.1	
Bus25	4.000	93.980	-9.6	0	0	0.199	0.138	6Z-MVC-SWG-11	-0.199	-0.138	37.2	82.1	
Bus26	4.000	94.006	-9.6	0	0	0.199	0.138	6Z-MVC-SWG-11	-0.199	-0.138	37.2	82.1	
Bus28	13.200	94.266	-8.1	0	0	4.342	1.706	6Z-MVA-SWG-1	-4.342	-1.706	216.5	93.1	
Bus29	4.000	94.001	-9.7	0	0	0.400	0.169	6Z-MVC-SWG-11	-0.400	-0.169	66.7	92.1	
Bus43	4.000	93.941	-9.6	0	0	0.199	0.138	6Z-MVC-SWG-11	-0.199	-0.138	37.2	82.1	
FIRE PUMP TAP BUS	0.480	87.732	-12.5	0	0	0	0	SUS 12 Secondary	-2.610	-1.278	3985.1	89.8	
								6Z-LVB-SWG-12	2.610	1.278	3985.1	89.8	
* HV BUS	230.000	99.813	0.0	0	0	0	0	MPT X WINDING	55.107	77.847	239.9	57.8	-8.125
								U1	-55.107	-77.847	239.9	57.8	
MPT X WINDING	13.800	90.283	-8.1	0	0	0	0	6Z-MVA-SWG-1	54.421	57.626	3673.0	68.7	
								HV BUS	-54.421	-57.626	3673.0	68.7	
SUS 11 Primary	13.800	90.245	-8.1	0	0	0	0	6Z-MVA-SWG-1	-2.403	-1.657	135.3	82.3	
								SUS 11 Secondary	2.403	1.657	135.3	82.3	-2.500
SUS 11 Secondary	4.160	90.619	-9.6	0	0	0	0	6Z-MVC-SWG-11	2.396	1.558	437.7	83.8	
								SUS 11 Primary	-2.396	-1.558	437.7	83.8	
SUS 12 Primary	13.800	90.243	-8.1	0	0	0	0	6Z-MVA-SWG-1	-2.641	-1.559	142.2	86.1	
								SUS 12 Secondary	2.641	1.559	142.2	86.1	-2.500
SUS 12 Secondary	0.480	88.003	-12.4	0	0	0	0	FIRE PUMP TAP BUS	2.615	1.288	3985.1	89.7	
								SUS 12 Primary	-2.615	-1.288	3985.1	89.7	
SUS 21 PRIMARY	13.800	89.866	-8.3	0	0	0	0	6Z-MVA-SWG-2	-3.494	-1.599	178.9	90.9	
								SUS 21 SECONDARY	3.494	1.599	178.9	90.9	-2.500
SUS 21 SECONDARY	4.160	90.238	-10.6	0	0	0	0	6Z-MVC-SWG-21	3.482	1.426	578.7	92.5	
								SUS 21 PRIMARY	-3.482	-1.426	578.7	92.5	
SUS 22 PRIMARY	13.800	89.867	-8.3	0	0	0	0	6Z-MVA-SWG-2	-1.971	-1.509	115.6	79.4	

Project:	ETAP	Page:	6
Location:	20.6.0C	Date:	04-18-2023
Contract:		SN:	KIEWITRWN9
Engineer:		Revision:	Base
Filename: GE-Southern	Study Case: MS-CIRWAT	Config.:	Normal

LOAD FLOW REPORT @ T = 0.200+

Bus		Voltage		Generation		Load		Load Flow					XFMR
ID	kV	% Mag.	Ang.	MW	Mvar	MW	Mvar	ID	MW	Mvar	Amp	% PF	% Tap
								SUS 22 SECONDARY	1.971	1.509	115.6	79.4	-2.500
SUS 22 SECONDARY	0.480	87.783	-11.5	0	0	0	0	6Z-LVB-SWG-22	1.955	1.331	3240.0	82.7	
								SUS 22 PRIMARY	-1.955	-1.331	3240.0	82.7	
*U1	230.000	100.214	0.1	55.123	78.305	0	0	HV BUS	55.123	78.305	239.9	57.6	

* Indicates a voltage regulated bus (voltage-controlled or swing type machine connected to it).

Project:	**ETAP** 20.6.0C	Page:	7
Location:		Date:	04-18-2023
Contract:		SN:	KIEWITRWN9
Engineer:		Revision:	Base
Filename: GE-Southern	Study Case: **MS-CIRWAT**	Config.:	Normal

LOAD FLOW REPORT @ T = 3.000+

Bus		Voltage		Generation		Load		Load Flow					XFMR
ID	kV	% Mag.	Ang.	MW	Mvar	MW	Mvar	ID	MW	Mvar	Amp	% PF	% Tap
6Z-LVB-MCC-121	0.480	96.164	-11.9	0	0	1.010	0.599	6Z-LVB-SWG-12	-1.010	-0.599	1469.3	86.0	
6Z-LVB-MCC-122	0.480	96.165	-11.9	0	0	1.004	0.596	6Z-LVB-SWG-12	-1.004	-0.596	1460.4	86.0	
6Z-LVB-MCC-123	0.480	96.260	-12.0	0	0	0.849	0.172	6Z-LVB-SWG-12	-0.849	-0.172	1082.9	98.0	
6Z-LVB-MCC-221	0.480	96.230	-10.8	0	0	1.002	0.678	6Z-LVB-SWG-22	-1.002	-0.678	1512.2	82.8	
6Z-LVB-MCC-222	0.480	96.230	-10.8	0	0	1.002	0.678	6Z-LVB-SWG-22	-1.002	-0.678	1512.2	82.8	
6Z-LVB-SWG-12	0.480	96.394	-11.9	0	0	0	0	6Z-LVB-MCC-121	1.012	0.602	1469.3	85.9	
								6Z-LVB-MCC-122	1.006	0.598	1460.4	85.9	
								6Z-LVB-MCC-123	0.850	0.174	1082.9	98.0	
								FIRE PUMP TAP BUS	-2.868	-1.374	3968.4	90.2	
6Z-LVB-SWG-22	0.480	96.469	-10.7	0	0	0	0	SUS 22 SECONDARY	-2.007	-1.362	3024.5	82.8	
								6Z-LVB-MCC-221	1.004	0.681	1512.2	82.8	
								6Z-LVB-MCC-222	1.004	0.681	1512.2	82.8	
6Z-MVA-SWG-1	13.800	98.593	-7.8	0	0	0	0	Bus6	4.344	1.711	198.1	93.0	
								Bus28	4.344	1.711	198.1	93.0	
								MPT X WINDING	-56.388	-32.690	2765.8	86.5	
								6Z-MVA-SWG-2	5.527	3.117	269.3	87.1	
								SUS 11 Primary	2.401	1.640	123.4	82.6	
								SUS 12 Primary	2.898	1.652	141.6	86.9	
								Bus7	36.874	22.859	1841.0	85.0	
6Z-MVA-SWG-2	13.800	98.249	-7.9	0	0	0	0	6Z-MVA-SWG-1	-5.516	-3.091	269.3	87.2	
								SUS 21 PRIMARY	3.491	1.568	163.0	91.2	
								SUS 22 PRIMARY	2.025	1.523	107.9	79.9	
6Z-MVC-SWG-11	4.160	99.339	-9.1	0	0	0	0	Bus18	0.199	0.139	33.9	82.1	
								Bus20	0.199	0.139	33.9	82.1	
								Bus21	0.199	0.139	33.9	82.1	
								Bus26	0.199	0.139	33.9	82.1	
								Bus22	0.199	0.139	33.9	82.1	
								Bus23	0.199	0.139	33.9	82.1	
								Bus24	0.199	0.139	33.9	82.1	
								Bus25	0.199	0.139	33.9	82.1	
								Bus43	0.199	0.139	33.9	82.1	
								Bus2	0.199	0.139	33.9	82.1	
								Bus29	0.401	0.170	60.8	92.1	
								SUS 11 Secondary	-2.394	-1.557	399.0	83.8	
6Z-MVC-SWG-21	4.160	99.000	-9.9	0	0	0	0	SUS 21 SECONDARY	-3.480	-1.424	527.1	92.6	
								Bus8	1.740	0.712	263.6	92.6	

Project:	ETAP	Page:	8
Location:	20.6.0C	Date:	04-18-2023
Contract:		SN:	KIEWITRWN9
Engineer:		Revision:	Base
Filename: GE-Southern	Study Case: MS-CIRWAT	Config.:	Normal

LOAD FLOW REPORT @ T = 3.000+

Bus		Voltage		Generation		Load		Load Flow					XFMR
ID	kV	% Mag.	Ang.	MW	Mvar	MW	Mvar	ID	MW	Mvar	Amp	% PF	% Tap
								Bus9	1.740	0.712	263.6	92.6	
Bus2	4.000	103.052	-9.1	0	0	0.199	0.138	6Z-MVC-SWG-11	-0.199	-0.138	33.9	82.1	
Bus6	13.200	102.997	-7.8	0	0	4.342	1.706	6Z-MVA-SWG-1	-4.342	-1.706	198.1	93.1	
Bus7	13.800	98.566	-7.8	0	0	36.867	22.848	6Z-MVA-SWG-1	-36.867	-22.848	1841.0	85.0	
Bus8	4.160	98.815	-10.0	0	0	1.738	0.708	6Z-MVC-SWG-21	-1.738	-0.708	263.6	92.6	
Bus9	4.160	98.815	-10.0	0	0	1.738	0.708	6Z-MVC-SWG-21	-1.738	-0.708	263.6	92.6	
Bus18	4.000	103.124	-9.1	0	0	0.199	0.138	6Z-MVC-SWG-11	-0.199	-0.138	33.9	82.1	
Bus20	4.000	103.124	-9.1	0	0	0.199	0.138	6Z-MVC-SWG-11	-0.199	-0.138	33.9	82.1	
Bus21	4.000	103.112	-9.1	0	0	0.199	0.138	6Z-MVC-SWG-11	-0.199	-0.138	33.9	82.1	
Bus22	4.000	103.100	-9.1	0	0	0.199	0.138	6Z-MVC-SWG-11	-0.199	-0.138	33.9	82.1	
Bus23	4.000	103.100	-9.1	0	0	0.199	0.138	6Z-MVC-SWG-11	-0.199	-0.138	33.9	82.1	
Bus24	4.000	103.088	-9.1	0	0	0.199	0.138	6Z-MVC-SWG-11	-0.199	-0.138	33.9	82.1	
Bus25	4.000	103.088	-9.1	0	0	0.199	0.138	6Z-MVC-SWG-11	-0.199	-0.138	33.9	82.1	
Bus26	4.000	103.112	-9.1	0	0	0.199	0.138	6Z-MVC-SWG-11	-0.199	-0.138	33.9	82.1	
Bus28	13.200	102.997	-7.8	0	0	4.342	1.706	6Z-MVA-SWG-1	-4.342	-1.706	198.1	93.1	
Bus29	4.000	103.107	-9.1	0	0	0.400	0.169	6Z-MVC-SWG-11	-0.400	-0.169	60.8	92.1	
Bus43	4.000	103.052	-9.1	0	0	0.199	0.138	6Z-MVC-SWG-11	-0.199	-0.138	33.9	82.1	
FIRE PUMP TAP BUS	0.480	96.394	-11.9	0	0	0	0	SUS 12 Secondary	-2.868	-1.374	3968.4	90.2	
								6Z-LVB-SWG-12	2.868	1.374	3968.4	90.2	
* HV BUS	230.000	99.982	0.0	0	0	0	0	MPT X WINDING	56.785	44.171	180.6	78.9	-8.125
								U1	-56.785	-44.171	180.6	78.9	
MPT X WINDING	13.800	98.616	-7.8	0	0	0	0	6Z-MVA-SWG-1	56.397	32.706	2765.8	86.5	
								HV BUS	-56.397	-32.706	2765.8	86.5	
SUS 11 Primary	13.800	98.589	-7.8	0	0	0	0	6Z-MVA-SWG-1	-2.401	-1.639	123.4	82.6	
								SUS 11 Secondary	2.401	1.639	123.4	82.6	-2.500
SUS 11 Secondary	4.160	99.354	-9.1	0	0	0	0	6Z-MVC-SWG-11	2.395	1.557	399.0	83.8	
								SUS 11 Primary	-2.395	-1.557	399.0	83.8	
SUS 12 Primary	13.800	98.587	-7.8	0	0	0	0	6Z-MVA-SWG-1	-2.898	-1.652	141.6	86.9	
								SUS 12 Secondary	2.898	1.652	141.6	86.9	-2.500
SUS 12 Secondary	0.480	96.663	-11.8	0	0	0	0	FIRE PUMP TAP BUS	2.873	1.384	3968.4	90.1	
								SUS 12 Primary	-2.873	-1.384	3968.4	90.1	
SUS 21 PRIMARY	13.800	98.243	-7.9	0	0	0	0	6Z-MVA-SWG-2	-3.491	-1.568	163.0	91.2	
								SUS 21 SECONDARY	3.491	1.568	163.0	91.2	-2.500
SUS 21 SECONDARY	4.160	99.014	-9.9	0	0	0	0	6Z-MVC-SWG-21	3.481	1.424	527.1	92.5	
								SUS 21 PRIMARY	-3.481	-1.424	527.1	92.5	
SUS 22 PRIMARY	13.800	98.243	-7.9	0	0	0	0	6Z-MVA-SWG-2	-2.025	-1.523	107.9	79.9	

Project:	ETAP	Page:	9
Location:	20.6.0C	Date:	04-18-2023
Contract:		SN:	KIEWITRWN9
Engineer:		Revision:	Base
Filename: GE-Southern	Study Case: MS-CIRWAT	Config.:	Normal

LOAD FLOW REPORT @ T = 3.000+

Bus		Voltage		Generation		Load		Load Flow					XFMR
ID	kV	% Mag.	Ang.	MW	Mvar	MW	Mvar	ID	MW	Mvar	Amp	% PF	% Tap
								SUS 22 SECONDARY	2.025	1.523	107.9	79.9	-2.500
SUS 22 SECONDARY	0.480	96.688	-10.7	0	0	0	0	6Z-LVB-SWG-22	2.010	1.367	3024.5	82.7	
								SUS 22 PRIMARY	-2.010	-1.367	3024.5	82.7	
*U1	230.000	100.214	0.1	56.794	44.431	0	0	IIV BUS	56.794	44.431	180.6	78.8	

* Indicates a voltage regulated bus (voltage-controlled or swing type machine connected to it).

Appendix X

OSBL DC Battery and UPS Calculation

GE/SOUTHERN/LINDE ADVANCED NGCC INTEGRATION
DC BATTERY AND UPS CALCULATION

REV	DATE	DESCRIPTION	ORIG	CHK	APPR
0	21-APR-2023	ISSUED FOR FEED	NJM	RMS	BRL
A	10-MAR-2023	ISSUED FOR REVIEW	NJM	RMS	BRL

PROJECT	DOCUMENT NUMBER	REVISION
20041223	20041223-CA-ELE-004	0

KIEWIT ENGINEERING GROUP INC.

000000-EL-TMP-1001 v. 00

DOCUMENT NO.: 20041223-CA-ELE-004
REV.: 0

BATTERY AND CHARGER SIZING WORKSHEET NOTES

Battery Size Calculation

Sizing equation for determining the capacity of the battery bank.

H= time (hours) operating in in current segment of duty cycle
A= amount of current (amps) required to operate in current segment of duty cycle
Cb= battery capacity needed under ideal circumstances

$$C_b = A_1H_1 + A_2H_2 + A_3H_3 + \cdots + A_nH_n$$

DM= design margin in % to account for unknown/miscellaneous loads
T= assume 1.000 for calculations @ 77 F.
If another temp is desired, see Temperature Correction Tab
A= Aging factor, to account for battery quality loss as they age

$$Expected\ Battery\ Size \geq C_b \times DM \times T \times A$$

Charger Size Calculation

Sizing equation for determining the size of the battery charger from IEEE Std 946-2004:

Equation 1: $I_1 = L + (1.1 \times C) / H$
Equation 2: $I_2 = I_{LC} + L$
Equation 3: $I_3 = \text{Max}\ (I_1, I_2)$

I_1 = Is the minimum required charger rated output (in amperes). Battery manufacturers often recommned that the charging rate be limited; typical values are 10% to 20% of the 8 h capacity. I_1 should be evaluated for the maximum and minumum values of L.

I_2 = is the minimum charger output (in amperes) that will supply the maximum operating load.

I_3 = is the recommended charger rated output (in amperes); i.e., the larger of I_1 and I_2. If it can be demonstrated that the reduction in battery capacity that results during and following the application of Ln does not compromise the ability fo the battery to satisfy its intended function, the user may select Equation (1) as the basis of sizing the battery charger(s). Battery manufacturers often recommend that the charging rate be limited; typical values are 10% and 20% of the 8 h capacity. I3 should be evaluated for the maximum values of ILC.

I_{LC} = is the continuous dc load (in amperes), including future load growth.

L = is the largest combination of non-continuous loads (as defined in 4.2.2 of IEEE Std 485-2020) that would likely be connected to the bus simultaneously during normal plant operation, including periodic testing of dc components such as emergency lighting and emergency oil pumps.

1.1 = is the constant that compensates for battery losses.

C = is the discharge from the battery measured in ampere-hours. After discharge testing as defined in IEEE Std 450-2000, it is convenient to assume that the ampere-hours removed by the test can be replaced in 8 h to 24 h. For users meeting the requirements of IEEE Std 308-2001, the ampere-hours removed by the duty cycle is appropriate.

H = is the time to recharge the battery to approximately 95% of capacity (in hours). To minimize dc system downtime, a reasonable recharge time should be selected; 8 h to 24 h is recommended. It is recommended that the battery manufacturer be consulted for values of T less than 8 h.

DOCUMENT NO.: 20041223CA-ELE-004
REV.: 0

125V DC Station Battery Sizing Calculation Worksheet

Project Name: GE/Southern/Linde Advanced NGCC Integration
Project Number: 20041223

DUTY CYCLE CALCULATIONS :

UPS Inverter Efficiency: 0.88
Plant Battery Voltage (V) : 125
Engg. Design Margin (DM) (Contract + Design) : 10%

	1	2-30	31-60	61-90	91-119	120
Elapsed Time (min.)	1	30	60	90	119	120
Duration (min.)	1	29	30	30	29	1
Duration (hr.)	0.02	0.48	0.50	0.50	0.48	0.02

Revised on: 08/20/23 15:51

EQUIPMENT / SERVICE	QTY. / UNITS	DESIGN AMPS (A)	NORMAL OPERATING AMPS (A)	DUTY CYCLE AMPS 0 < t ≤ 1	1 < t ≤ 30	30 < t ≤ 60	60 < t ≤ 90	90 < t ≤ 119	119 < t ≤ 120	TOTAL (Ah)	DWG. / DOC. REFERENCE
Relay Panels											
Relay and Metering Panels	2	7.00	14.00	14.00	14.00	14.00	14.00	14.00	14.00		
Control System											
Misc Control Panels	6	2.00	12.00	12.00	12.00	12.00	12.00	12.00	12.00		
Control Room Equipment	5	5.00	25.00	25.00	25.00	25.00	25.00	25.00	25.00		
DCS Cabinets	8	5.00	40.00	40.00	40.00	40.00	40.00	40.00	40.00		
PLC	1	2.00	2.00	2.00	2.00	2.00	2.00	2.00	2.00		
Electrically Operated Breakers											
High Voltage Breaker (Trip)	1	12.00	0.00	12.00	0.00	0.00	0.00	0.00	0.00		
High Voltage Breaker (Close)	1	12.00	0.00	0.00	0.00	0.00	0.00	0.00	12.00		
High Voltage Breaker (Charging)	1	12.00	0.00	0.00	0.00	0.00	0.00	0.00	12.00		
Medium Voltage Main Breaker (Trip)	4	4.80	0.00	19.20	0.00	0.00	0.00	0.00	0.00		
Medium Voltage Main Breaker (Close)	4	2.10	0.00	0.00	0.00	0.00	0.00	0.00	8.40		
Medium Voltage Main Breaker (Charging)	4	4.00	0.00	0.00	0.00	0.00	0.00	0.00	16.00		
Medium Voltage Feeder Breaker (Trip)	14	4.80	0.00	67.20	0.00	0.00	0.00	0.00	0.00		
Medium Voltage Feeder Breaker (Close)	14	2.10	0.00	0.00	0.00	0.00	0.00	0.00	29.40		
Medium Voltage Feeder Breaker (Charging)	14	4.00	0.00	0.00	0.00	0.00	0.00	0.00	56.00		
Medium Voltage Switchgear (Normal) (See DC Load Profile Tab)	1	5.76	5.76	5.76	5.76	5.76	5.76	5.76	5.76		
Medium Voltage Lockout Relays Trip (See DC Load Profile Tab)	4	4.80	19.20	0.00	0.00	0.00	0.00	0.00	0.00		
Low Voltage Switchgear Main Breaker (Trip)	2	0.96	0.00	1.92	0.00	0.00	0.00	0.00	0.00		
Low Voltage Switchgear Main Breaker (Close)	2	0.96	0.00	0.00	0.00	0.00	0.00	0.00	1.92		
Low Voltage Switchgear Main Breaker (Charging)	2	0.88	0.00	0.00	0.00	0.00	0.00	0.00	1.76		
Low Voltage Switchgear Feeder Breakers (Trip)	7	0.96	0.00	6.72	0.00	0.00	0.00	0.00	0.00		
Low Voltage Switchgear Feeder Breaker (Close)	7	0.96	0.00	0.00	0.00	0.00	0.00	0.00	6.72		
Low Voltage Switchgear Feeder Breaker (Charging)	7	0.88	0.00	0.00	0.00	0.00	0.00	0.00	6.16		
Low Voltage Switchgear (Normal) (See DC Load Profile Tab)	1	0.52	0.52	0.52	0.52	0.52	0.52	0.52	0.52		
Transformers											
Miscellaneous Relay Panels (See DC Load Profile Tab)	0	0.00	0.00	0.00	0.00	0.00	0.00	0.00	0.00		
Main Power Transformer Relays	2	3.00	6.00	6.00	6.00	6.00	6.00	6.00	6.00		
Transformer Control Panel (MPT)	1	3.00	3.00	3.00	3.00	3.00	3.00	3.00	3.00		
Transformer Control Panel (SUS)	4	0.28	1.12	1.12	1.12	1.12	1.12	1.12	1.12		
UPS											
Size for 120V, 1Ph AC UPS (Amp.=Volt/Amp./Volt)	NA	NA	184.53	184.53	184.53	184.53	184.53	184.53	184.53		120V AC UPS Sizing Calculation Worksheet Actual Load Plus Contract Required Margin
Total Load (A) :			313.13	400.97	293.93	293.93	293.93	293.93	444.29		
Engg. Design Margin (DM) (10%) (A) :			31.31	40.10	29.39	29.39	29.39	29.39	44.43		
Required Ampacity (A) :			344.44	**441.06**	**323.32**	**323.32**	**323.32**	**323.32**	**488.72**		
Required Capacity (Ah) :				**7.35**	**156.27**	**161.66**	**161.66**	**156.27**	**8.15**	**651.36**	

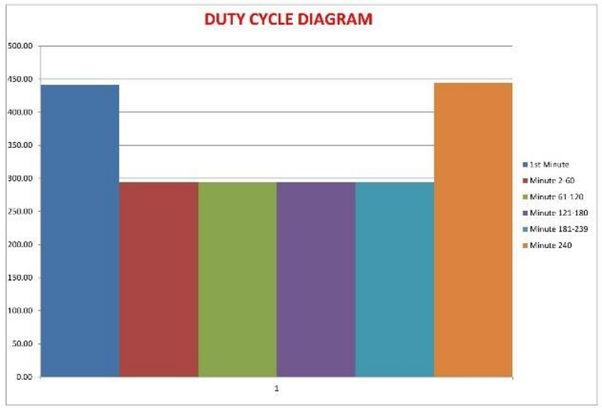

BATTERY SIZE :

Expected Battery Size (Ah) ≥ C_b x DM x T x A

C_b = Base Battery Capacity

DM = Engg. Design Margin	(C_b * DM) =	651.36 Ah	Design Margin Calculation Included Above
T = Temperature correction factor	T =	1.011	Battery Rooms and PDC Enclosures Design Temp is 77 +/- 2° F
A = Aging factor	A =	1.25	
	Minimum Battery Size =	**823.16 Ah**	(this includes Ah size, for 125V DC + 120V AC UPS systems)
	Minimum Battery Current Output =	**488.72 A**	

BATTERY CHARGER SIZE :

Ampere Charger (A) ≥ L + (1.1 x C) / H

1.1 = Recharging Factor for Lead Acid Battery Type

L = plant load at normal conditions (Normal Amps)	L =	344.44 A	
C = Ampere hours emergency discharge (Total Ah)	C =	823.16 Ah	
H = number of hours recharge time required per contract	H =	24 h	Per Design Criteria
	Minimum Battery Charger Size =	**382.17 A**	
	Battery Charger Capacity Chosen =	**400.00 A**	
Battery Charger Capacity Chosen Greater than Largest Instantaneous Load =		No	

DOCUMENT NO.: 20041223-CA-ELE-004
REV.: 0

DC LOAD CALCULATION

NOTE: Only Edit Items in Yellow.

MV SWGR				
Qty	Description	Load	AMPS	CONTINUOUS (A)
0	GE-F60 Relays	30VA Max	0.24	0
0	GE-M60 Relays	30VA Max	0.24	0
0	GE-T60 Relays	30VA Max	0.24	0
7	SEL-751 Relays	25W	0.2	1.4
0	SEL-751A Relays	25W	0.2	0
16	SEL-710 Relays	25W	0.2	3.2
4	SEL-787 Relays	25W	0.2	0.8
0	SEL-587Z Relays	20W	0.16	0
0	SEL-587Z Relays	5.5W	0.044	0
0	SEL-787 Relays	25W	0.2	0
0	Beckwith M-3311A Relays	20VA	0.16	0
0	Beckwith M-4272 Relays	20VA	0.16	0
90	Indicating Lights	0.5W	0.004	0.36
				5.76

MV Lock Out relays				
Qty	Description	Load	TRIP	CONTINUOUS
4	Lock Out Relays	1.2A trip	4.8	0
12	Indicating Lights	0.5W	0	0.048
			4.8	0.048

LV SWGR				
Qty	Description	Load	AMPS	CONTINUOUS
0	751 Relays	25W	0.2	0
2	751A Relays	25W	0.2	0.4
0	Beckwith M-4172 Relays	20VA	0.16	0
30	Indicating Lights	0.5W	0.004	0.12
				0.52

RELAY PANELS				
Qty	Description	Load	AMPS	CONTINUOUS
0	SEL-300G Relays	25W	0.2	0
0	GE-G60 Relays	30VA Max	0.24	0
0	Siemens SIPROTEC 7UM85 Relays	25W	0.2	0
0	GE-G60 Relays	30VA Max	0.24	0
0	T60 Relay	30VA Max	0.24	0
0	Beckwith M-3311A Relays	20VA	0.16	0
0	SEL-787 Relays	25W	0.2	0
0	Indicating Lights	0.5W	0.004	0
				0

DOCUMENT NO.: 20041223-CA-ELE-004
REV.: 0

120V AC UPS Sizing Calculation Worksheet

Project Name: GE/Southern/Linde Advanced NGCC Integration
Project Number: 20041223

Plant UPS Voltage : 120 V, 1Ph, 60Hz **Design Cap. Margin (DM) :** 10.0%
Inverter Efficiency : 88.0% **Engg. Margin (EM) :** 10.0% *Printed on :* 4/20/2023 15:51

SERVICE / EQUIPMENT	QTY. / UNITS	UNIT RATING (A)	LOAD (A)	LOAD (kVA)	DEMAND FACTOR	DEMAND (A)	DEMAND (kVA)	DRAWING / DOCUMENT REFERENCE
Control / Communication System								
DCS I/O Cabinets & Associated HMIs :								
ISBL DCS in Enclosure	2	3.38	6.76	0.81	1.00	6.76	0.81	Assumed value, pending further information on IO
OSBL DCS in Enclosure	2	3.38	6.76	0.81	1.00	6.76	0.81	
Server Room DCS Cabinets	2	3.38	6.76	0.81	1.00	6.76	0.81	
Remote IO Cabinets	2	3.38	6.76	0.81	1.00	6.76	0.81	Assumed value, pending further information on IO
Other Equipment:						0.00		
Printer (Color laser)	2	5.30	10.60	1.27	1.00	10.60	1.27	
Operator Workstation (Dual monitor)	2	7.17	14.34	1.72	1.00	14.34	1.72	
ISBL Equipment Workstation	1	7.17	7.17	0.86	1.00	7.17	0.86	
Engineering Workstation	1	7.17	7.17	0.86	1.00	7.17	0.86	
Network Switches - CISCO 9300 Catalyst or Equal	8	3.40	27.20	3.26	1.00	27.20	3.26	
Firewall	1	3.40	3.40	0.41	1.00	3.40	0.41	
Historian Server	1	5.67	5.67	0.68	1.00	5.67	0.68	
Network Patch Panels/Cabinets	4	1.50	6.00	0.72	1.00	6.00	0.72	
PLC's								
Substation RTU	1	0.33	0.33	0.04	1.00	0.33	0.04	
PLC Air Compressor	1	2.00	2.00	0.24	1.00	2.00	0.24	
Communications/Telephone (In Admin)								
Owner Telecom Equipment	1	20.00	20.00	2.40	0.50	10.00	1.20	
Kiewit Provided Communications/Telephone (In Admin)	1	20.00	20.00	2.40	0.50	10.00	1.20	
CCTV/Site Security	1	5.00	5.00	0.60	0.50	2.50	0.30	
Misc.								
Control Room Emergency Lighting	1	5.00	5.00	0.60	1.00	5.00	0.60	
Site Fire Protection/HVAC	5	3.07	15.35	1.84	1.00	15.35	1.84	
TOTAL	**39**	***4.52***	**176.27**	**21.15**	***0.87***	**153.77**	**18.45**	
					Ampacity for Batt. Sizing (Including Inverter Efficiency in Batt Calc):	**153.77**	**18.45**	=(Demand)
					Design Capacity Margin (10%) :	**15.38**	**1.85**	= 10% of Demand
					Engg. Margin (10%) :	**15.38**	**1.85**	= 10% of Demand
					Required Capacity :	**184.53**	**22.14**	= Demand + DM (10%) + EM (10%)
					Capacity Chosen @ 1.0 PF :	**250.00**	**30.00**	

APPENDICES

PROJECT: GE/Southern/Linde Advanced NGCC Integration
JOB NUMBER: 20041223

CALC NO CA-ELE-004

SUBJECT DC Battery and UPS Calculation

BY Nick Mechler **DATE** 4/21/2023 **SHEET REV** 0

APPENDIX A

Description	No. of Pages
Overall One-Line Diagram	2

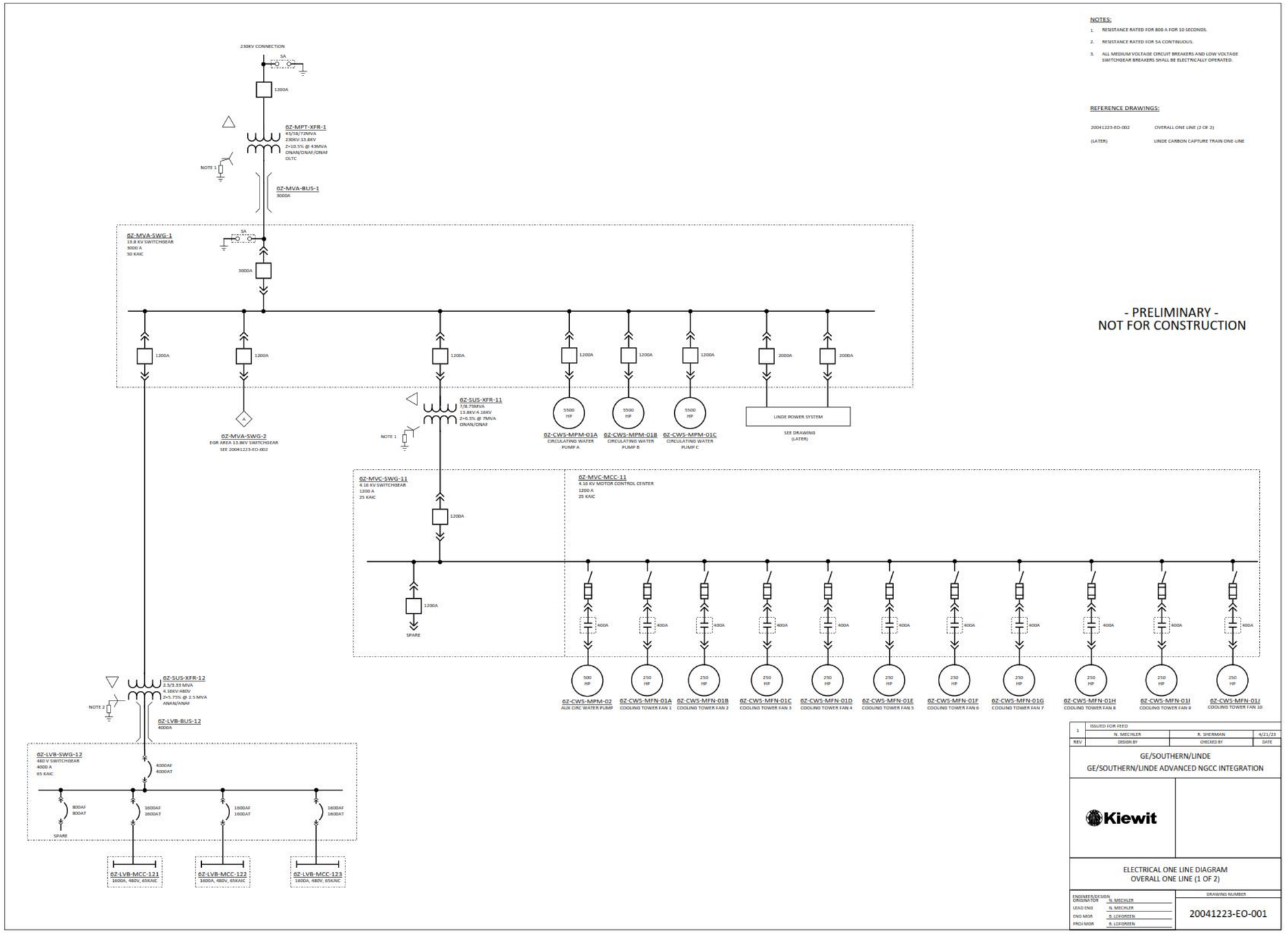
NOTES:
1. RESISTANCE RATED FOR 800 A FOR 10 SECONDS.
2. RESISTANCE RATED FOR 5A CONTINUOUS.
3. ALL MEDIUM VOLTAGE CIRCUIT BREAKERS AND LOW VOLTAGE SWITCHGEAR BREAKERS SHALL BE ELECTRICALLY OPERATED.
REFERENCE DRAWINGS:
20041223-EO-002 OVERALL ONE LINE (2 OF 2)
(LATER) LINDE CARBON CAPTURE TRAIN ONE-LINE
- PRELIMINARY -
NOT FOR CONSTRUCTION
230KV CONNECTION
5A
1200A
6Z-MPT-XFR-1
43/58/72MVA
230KV-13.8KV
Z=10.5% @ 43MVA
ONAN/ONAF/ONAF
OLTC
NOTE 1
6Z-MVA-BUS-1
3000A
6Z-MVA-SWG-1
13.8 KV SWITCHGEAR
3000 A
50 KAIC
3000A
1200A
6Z-MVA-SWG-2
EGR AREA 13.8KV SWITCHGEAR
SEE 20041223-EO-002
6Z-SUS-XFR-11
7/8.75MVA
13.8KV-4.16KV
Z=6.5% @ 7MVA
ONAN/ONAF
NOTE 1
6Z-CWS-MPM-01A
CIRCULATING WATER PUMP A
6Z-CWS-MPM-01B
CIRCULATING WATER PUMP B
6Z-CWS-MPM-01C
CIRCULATING WATER PUMP C
5500 HP
2000A
LINDE POWER SYSTEM
SEE DRAWING (LATER)
6Z-MVC-SWG-11
4.16 KV SWITCHGEAR
1200 A
25 KAIC
6Z-MVC-MCC-11
4.16 KV MOTOR CONTROL CENTER
1200 A
25 KAIC
SPARE
400A
6Z-CWS-MPM-02
AUX CIRC WATER PUMP
6Z-CWS-MFN-01A
COOLING TOWER FAN 1
6Z-CWS-MFN-01B
COOLING TOWER FAN 2
6Z-CWS-MFN-01C
COOLING TOWER FAN 3
6Z-CWS-MFN-01D
COOLING TOWER FAN 4
6Z-CWS-MFN-01E
COOLING TOWER FAN 5
6Z-CWS-MFN-01F
COOLING TOWER FAN 6
6Z-CWS-MFN-01G
COOLING TOWER FAN 7
6Z-CWS-MFN-01H
COOLING TOWER FAN 8
6Z-CWS-MFN-01I
COOLING TOWER FAN 9
6Z-CWS-MFN-01J
COOLING TOWER FAN 10
500 HP
250 HP
6Z-SUS-XFR-12
2.5/3.33 MVA
4.16KV-480V
Z=5.75% @ 2.5 MVA
ANAN/ANAF
NOTE 2
6Z-LVB-BUS-12
4000A
6Z-LVB-SWG-12
480 V SWITCHGEAR
4000 A
65 KAIC
4000AF
4000AT
800AF
800AT
1600AF
1600AT
SPARE
6Z-LVB-MCC-121
1600A, 480V, 65KAIC
6Z-LVB-MCC-122
1600A, 480V, 65KAIC
6Z-LVB-MCC-123
1600A, 480V, 65KAIC
1 ISSUED FOR FEED
N. MECHLER R. SHERMAN 4/21/23
REV DESIGN BY CHECKED BY DATE
GE/SOUTHERN/LINDE
GE/SOUTHERN/LINDE ADVANCED NGCC INTEGRATION
Kiewit
ELECTRICAL ONE LINE DIAGRAM
OVERALL ONE LINE (1 OF 2)
ENGINEER/DESIGN ORIGINATOR N. MECHLER
LEAD ENG N. MECHLER
ENG MGR B. LOFGREEN
PROJ MGR B. LOFGREEN
DRAWING NUMBER
20041223-EO-001

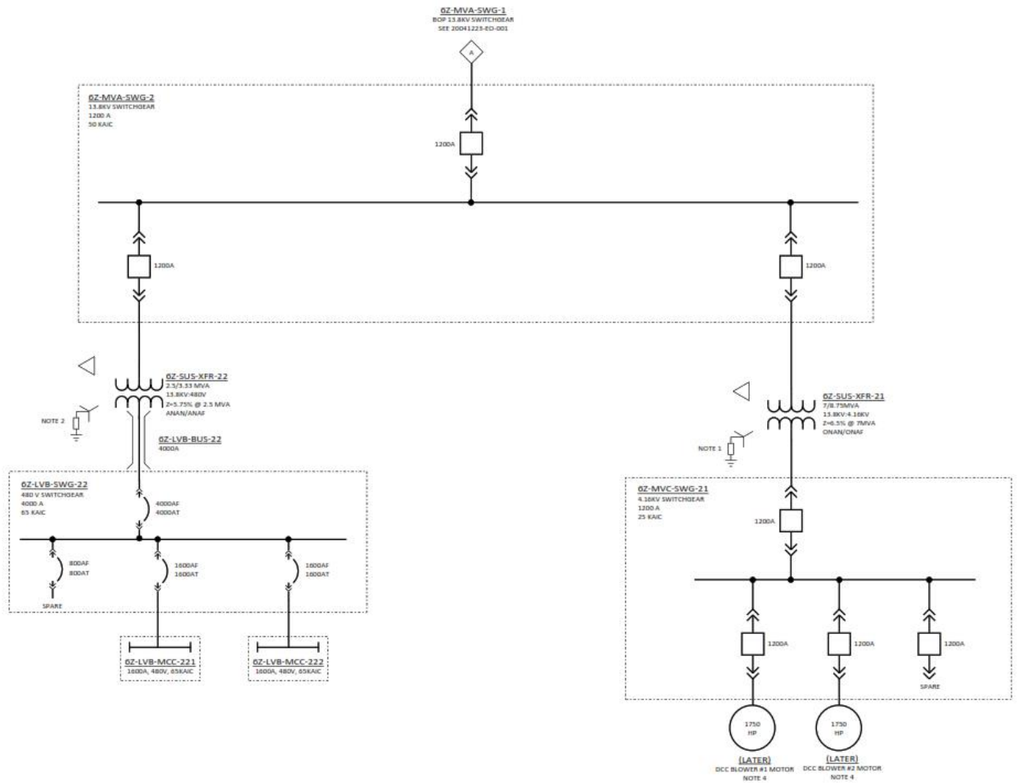

NOTES:

1. RESISTANCE RATED FOR 800 A FOR 10 SECONDS.
2. RESISTANCE RATED FOR 5A CONTINUOUS.
3. ALL MEDIUM VOLTAGE CIRCUIT BREAKERS AND LOW VOLTAGE SWITCHGEAR BREAKERS SHALL BE ELECTRICALLY OPERATED.
4. MOTOR SUPPLIED BY GE.

REFERENCE DRAWINGS:

20041223-EO-001	OVERALL ONE LINE (1 OF 2)
(LATER)	LINDE CARBON CAPTURE TRAIN ONE-LINE

- PRELIMINARY -
NOT FOR CONSTRUCTION

REV	DESIGN BY	CHECKED BY	DATE
1	ISSUED FOR FEED		
	N. MECHLER	K. SHERMAN	4/21/23

GE/SOUTHERN/LINDE

GE/SOUTHERN/LINDE ADVANCED NGCC INTEGRATION

Kiewit

ELECTRICAL ONE LINE DIAGRAM
OVERALL ONE LINE (2 OF 2)

ENGINEER/DESIGN ORIGINATOR	N. MECHLER
LEAD ENG	N. MECHLER
ENG MGR	B. LOFGREEN
PROJ MGR	B. LOFGREEN

DRAWING NUMBER: 20041223-EO-002

APPENDICES

PROJECT: GE/Southern/Linde Advanced NGCC Integration
JOB NUMBER: 20041223

CALC NO CA-ELE-004

SUBJECT DC Battery and UPS Calculation

BY Nick Mechler **DATE** OPEN **SHEET REV** 0

APPENDIX B

Description	No. of Pages
Overall Communication Diagram	1

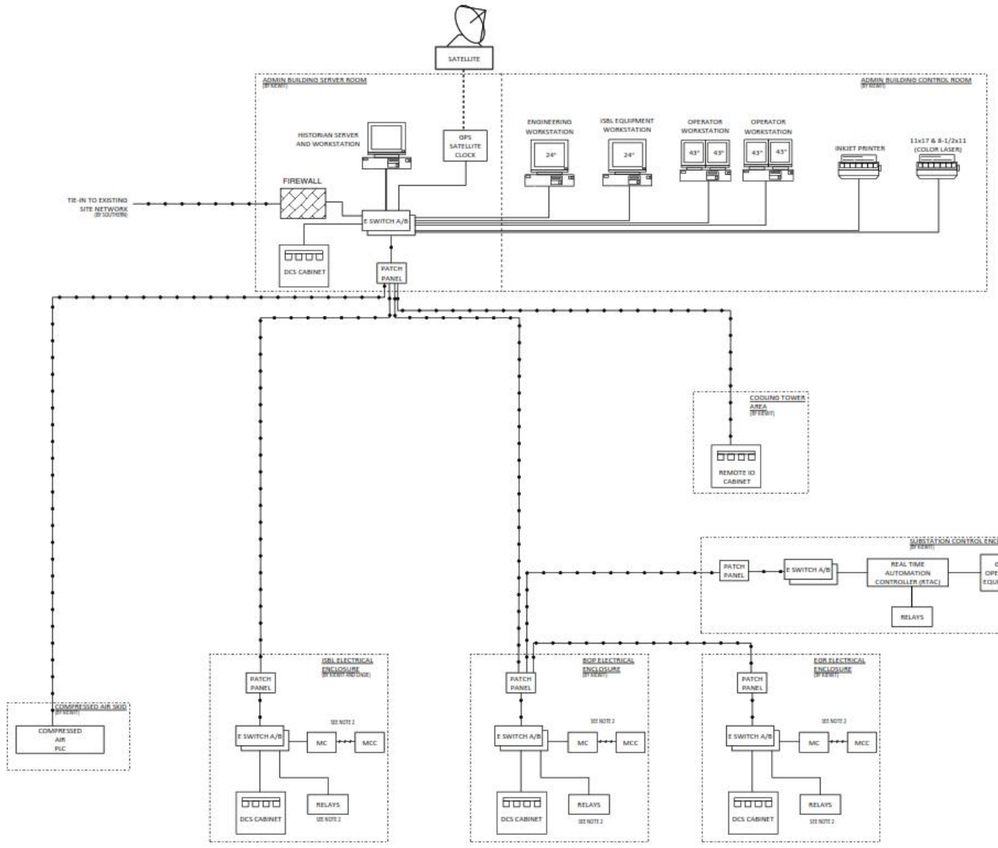

NOTES:

1. THIS DIAGRAM IS REPRESENTATIVE OF EQUIPMENT CONTAINED WITHIN ENCLOSURES. MULTIPLE DCS CABINETS, RELAYS, ETC. MAY BE PRESENT WHERE INDICATED ON THE DIAGRAM.
2. ALL EQUIPMENT SHOWN IS PROVIDED BY KIEWIT WITH THE EXCEPTION OF MCCS, RELAYS, AND MEDIA CONVERTERS IN THE ISBL ELECTRICAL ENCLOSURE. EXCLUDED EQUIPMENT IN THE ISBL ELECTRICAL ENCLOSURE WILL BE PROVIDED BY LINDE.

LEGEND:

- REDUNDANT MULTIMODE FIBER OPTIC CABLE
- UTP CATEGORY 5E CABLE
- SERIAL CABLE

ACRONYMS:

DCS	DISTRIBUTED CONTROL SYSTEM
MC	MEDIA CONVERTER
MCC	MOTOR CONTROL CENTER
PLC	PROGRAMMABLE LOGIC CONTROLLER
OSBL	OUTSIDE BATTERY LIMIT
ISBL	INSIDE BATTERY LIMIT
EOR	EXHAUST GAS RECIRCULATION

- PRELIMINARY -
NOT FOR CONSTRUCTION

REV	DESIGN BY	CHECKED BY	DATE
0	ISSUED FOR FEED N. MECHLER	Z. RABIEI	OPEN

GE/SOUTHERN/LINDE

GE/SOUTHERN/LINDE ADVANCED NGCC INTEGRATION

Kiewit

INSTRUMENTATION AND CONTROLS DIAGRAM
OVERALL COMMUNICATIONS DIAGRAM

ENGINEER/DESIGN ORIGINATOR	N. MECHLER
LEAD ENG	N. MECHLER
ENG MGR	B. LOFGREEN
PROJ MGR	B. LOFGREEN

DRAWING NUMBER: 20041223-IC-001

Appendix Y

OSBL Grounding Study

Kiewit

GE/SOUTHERN/LINDE ADVANCED NGCC INTEGRATION
GROUNDING STUDY

Kiewit Engineering Group Inc.

REV	DATE	DESCRIPTION	ORIG	CHK	APPR
A	12-MAY-2023	ISSUED FOR REVIEW	NJM	MRW	BRL

PROJECT	DOCUMENT NUMBER	REVISION
20041223	20041223-CA-ELE-005	A

KIEWIT ENGINEERING GROUP INC. | GANOTEC INC

CALCULATION SHEET

PROJECT: GE/Southern/Linde Advanced NGCC Integration
JOB NUMBER: 20041223

CALC NO: CA-ELE- 005

SUBJECT: GROUNDING STUDY **SHEET NO:** 1

BY: Nick Mechler **DATE:** 5/12/2023 **SHEET REV:** A

TABLE OF CONTENTS

Section	Description	Page
1.0	OBJECTIVE	2
2.0	CRITERIA	2
3.0	ASSUMPTIONS	3
4.0	METHODS	3
5.0	CALCULATIONS	4
6.0	SUMMARY OF RESULTS	5
7.0	CONCLUSIONS	6
8.0	REFERENCES	7

Appendices

A	Utility Fault Data
B	Ground Grid Layout
C	ETAP Short Circuit Study Report
D	ETAP Grounding Study Report

CALCULATION SHEET

PROJECT: GE/Southern/Linde Advanced NGCC Integration
JOB NUMBER: 20041223

				CALC NO:	CA-ELE- 005
SUBJECT:	GROUNDING STUDY			**SHEET NO:**	2
BY:	Nick Mechler	**DATE:**	5/12/2023	**SHEET REV:**	A

1.0 OBJECTIVE

1.1 The objective of this calculation is to establish the ground grid design needed to both ensure personnel safety from harmful step and touch potentials in the event of a fault condition and to successfully meet the Project Contract requirements for GE/Southern/Linde Advanced NGCC Integration.

1.2 As stated in IEEE Standard 80-2013 *Guide for Safety in AC Substation Grounding* [1], there are two main design goals to be achieved by any substation ground system under normal as well as fault conditions. These goals are

a) To provide means to dissipate electric currents into the earth without exceeding any operating and equipment limits.

b) To assure that a person in the vicinity of grounded facilities is not exposed to the danger of critical electric shock.

1.3 During a fault condition, the ground grid limits the ground potential rise. The ground potential rise (GPR) is the electrical potential increase from a point assumed to be at the remote earth potential relative to the location of the system fault. It is important to limit the GPR to minimize impact on offsite sources tied to the plant facility, and to reduce the step and touch potential levels throughout the facility.

1.4 The ground grid has additional uses for the project including the site lightning protection to effectively discharge high electrical potentials in the event of a lightning strike. In addition, the ground grid helps to prevent static charge buildup on plant equipment.

2.0 CRITERIA

2.1 The ground grid must protect station personnel from exposure to lethal doses of electrical energy during a fault event at the facility. IEEE Std. 80-2013 has provided the acceptable limits of electrical current for humans. The current limits are based on a person's size, frequency of the electricity, X/R ratio of the system, and duration of exposure. These current limits are used as a guide for designing the ground grid.

2.2 ETAP 20.6.0 calculates the acceptable and actual touch and step voltage levels, as defined in IEEE Std. 80-2013, by utilizing the aforementioned information, site conditions, and ground grid configuration. Additionally, ETAP will calculate the overall grid resistance based on the modeled grid design.

CALCULATION SHEET

PROJECT: GE/Southern/Linde Advanced NGCC Integration
JOB NUMBER: 20041223

CALC NO: CA-ELE- 005

SUBJECT: GROUNDING STUDY **SHEET NO:** 3

BY: Nick Mechler **DATE:** 5/12/2023 **SHEET REV:** A

2.3 Design Basis Criteria:

Description	Value/Method	Source
Soil Resistivity	Wenner Four-Pin Method	Not Available-ASSUMPTION
Soil Model	Single Layer Horizontal	ASSUMPTION
Total Symmetrical Ground Fault Current, $3I_0$	54.993 kA	ETAP Short Circuit Report (Appendix C)
System Frequency	60 Hz	
X/R Ratio	25	ETAP Short Circuit Report (Appendix C)
Fault Duration	0.25 sec (15 cycles)	ASSUMPTION FOR BACKUP CLEARING TIME
Weight used for Fibrillation Current Calculation	50 kg (human body weight)	IEEE Std. 80-2013
Body Resistance	1,000 Ω	IEEE Std. 80-2013
Split Factor	50%	ASSUMPTION BASED ON NEARBY PLANT GROUND GRIDS

2.4 Soil resistivity is based on an assumed single layer model of 100 Ohm-meters. Actual site soil resistivity data was not available at the time of this study.

2.4.1 A surface layer of #57 crushed stone is used for this study. The surface layer has a thickness of 6" and an assumed electrical resistivity of 8106.8 Ohm-meters, consistent with ETAP standard values. Maintenance of this stone level over the design life of the facility will be essential to ensure safe step and touch potentials in the designated substation area.

3.0 ASSUMPTIONS

3.1 Backup fault clearing time of 15 cycles or 0.25 seconds.

3.2 Soil electrical resistivity of 100 Ohm-meters

4.0 METHODS

4.1 ETAP version 20.6.0 was used to analyze the project substation grounding grid using methods based on IEEE Std. 80-2013. The project substation represents the area of greatest concern for system grounding due to high ground fault current contributions. Outside of the substation, all distribution areas are protected by low resistance and high resistance grounding.

CALCULATION SHEET

PROJECT: GE/Southern/Linde Advanced NGCC Integration
JOB NUMBER: 20041223

CALC NO: CA-ELE- 005

SUBJECT: GROUNDING STUDY **SHEET NO:** 4

BY: Nick Mechler **DATE:** 5/12/2023 **SHEET REV:** A

4.2 The overall ground grid will be designed to protect the entire project. Outside of the substation, ground loops will be provided around all equipment and enclosures to ensure safe touch and step potentials.

4.3 Kiewit Engineering & Design drawing 20041223-PP-001 was used as a design basis for the ground grid.

4.4 Conductors and ground rods were modeled at a depth of 18 inches, which is within typical grid depths per paragraph 16.2.5 of IEEE Std. 80-2013 [1].

5.0 CALCULATIONS

5.1 Performance of Ground Grid Calculations utilizing ETAP (Appendix D).

5.1.1 When designing a ground grid, it is necessary to determine the worst-case fault type. Per clause 15.8 of IEEE Std. 80-2013, "the worst case fault type is defined as the type of fault resulting in the highest zero sequence ground fault current, $3I_0$. For the GE/Southern/Linde project, the worst-case fault type was determined to be a single line-to-ground fault.

5.1.2 The total symmetrical ground fault current seen at the ground grid is 54.993 kA per Appendix C. This maximum fault current includes contribution from local and remote sources. A 50% split factor was utilized as an assumption of the split to other nearby local generation sources.

5.1.2.1 Fault Contributions ($3I_0$)

Remote Source	Fault Current
Utility Fault Contribution	54,632 Amps

Local Source	Fault Current
Main Power Transformer Contribution	817 Amps

5.1.3 Per IEEE Std. 80-2013 clause 15.10, "The design of a grounding grid must consider the asymmetrical current. A decrement factor must be derived to take into account the effect of dc current offset" [1]. CDEGS will calculate this value from the X/R ratio, system frequency and fault duration values provided in the Design Basis Criteria.

CALCULATION SHEET

PROJECT: GE/Southern/Linde Advanced NGCC Integration
JOB NUMBER: 20041223

CALC NO: CA-ELE- 005

SUBJECT: GROUNDING STUDY **SHEET NO:** 5

BY: Nick Mechler **DATE:** 5/12/2023 **SHEET REV:** A

5.1.4 Ground Grid Values:

Ground Grid Mesh Size	Ground Grid Resistance	GPR of Ground Grid
10 ft x 10 ft	0.935 Ω	28,926.7 V

5.1.5 The safety thresholds were determined with a fault clearing time of 0.25 seconds (15 cycles), a fibrillation current based on IEEE Std. 80-2013 (50kg.), a body resistance of 1000 Ω, and an X/R ratio of 25. Based on IEEE Std. 665-1995 [5], "A typical range of values for fault clearing times for power plants is 0.15-0.5 s. The primary clearing time will be less than 0.15 s if high-speed (2-3 cycle) breakers are used." A fault duration of 0.25 s was chosen based on assumed backup clearing times. Step and touch potential thresholds were determined based on the resistivity and thickness of the top layer of soil indicated in paragraph 5.1.3.

Touch Voltage Safety Threshold	Step Voltage Safety Threshold
2418 V	8975.9 V

5.1.6 The maximum touch and step voltages within the site ground grid were calculated and are shown in the report of Appendix D.

Maximum Touch Voltage	Maximum Step Voltage
2350.9 V	3414.2 V

5.1.7 Ground conductors are sized at 4/0 AWG bare copper.

6.0 SUMMARY OF RESULTS

6.1 Soil resistivity is represented by a single layer 100 Ohm-meter model, based on assumed values.

6.2 A total symmetrical ground fault current of 54.6 kA was injected into the plant grounding grid at the project substation with a split factor of 50% applied.

6.3 The voltage plots within Appendix D show that in all equipment areas the touch and step voltages are within the allowable limits defined in paragraph 5.2.5.

6.4 A total of 5,320 linear feet of 4/0 AWG Copper bare conductor and 64 ground rods (3/4" diameter by 10 foot length) is required.

CALCULATION SHEET

PROJECT: GE/Southern/Linde Advanced NGCC Integration
JOB NUMBER: 20041223

CALC NO: CA-ELE- 005

SUBJECT: GROUNDING STUDY **SHEET NO:** 6

BY: Nick Mechler **DATE:** 5/12/2023 **SHEET REV:** A

7.0 CONCLUSIONS

7.1 As designed, the GE/Southern/Linde Advanced NGCC Integration Substation grounding grid will safely provide a means to dissipate electric currents into the earth without exceeding operating and equipment limits and will assure that site personnel are not exposed to the danger of critical electric shock.

7.2 The project grounding grid design meets all Project Contract requirements.

CALCULATION SHEET

PROJECT: GE/Southern/Linde Advanced NGCC Integration
JOB NUMBER: 20041223

CALC NO: CA-ELE- 005

SUBJECT: GROUNDING STUDY **SHEET NO:** 7

BY: Nick Mechler **DATE:** 5/12/2023 **SHEET REV:** A

8.0 REFERENCES

[1] IEEE Std. 80-2013, IEEE Guide for Safety in AC Substation Grounding.

[2] IEEE Std. 81-2012, IEEE Guide for Measuring Earth Resistivity, Ground Impedance, and Earth Surface Potentials of a Ground System.

[3] IEEE Std. 142-2007, IEEE Recommended Practice for Grounding of Industrial and Commercial Power Systems (IEEE Green Book).

[4] IEEE Std. 399-1997, IEEE Recommended Practice for Industrial and Commercial Power System Analysis.

[5] IEEE Std. 665-1995, IEEE Guide for Generation Station Grounding.

[6] NFPA 70, National Electric Code, 2023.

APPENDICES

PROJECT: GE/Southern/Linde Advanced NGCC Integration
JOB NUMBER: 20041223

CALC NO CA-ELE-005

SUBJECT GROUNDING STUDY

BY Nick Mechler **DATE** 5/12/2023 **SHEET REV** A

APPENDIX A

Description	No. of Pages
Utility Fault Data	2

[redacted]

Sent: Wednesday, February 1, 2023 9:34 AM

[redacted]

Subject: [EXTERNAL] RE: GE/Southern - Barry 6 CCS Study - Electrical Coordination

[redacted]

Here's the site-specific information you requested:

- Available three-phase fault current and X/R ratio at point of interconnection: 50kA, X/R = 29
- Available single-phase fault current and X/R ratio at point of interconnection: 52kA, X/R = 20
- Point of Interconnection Voltage and tolerance (e.g. 345 kV +/- 5%): Nominal voltage is 230kV. Normal operating range is roughly 235kV – 240kV
- Anticipated grid fault clearing time: 3 cycles total for fault in collector substation (1 cycle relay time + 2 cycle breaker operate time)

Please let me know if there are any follow-up questions.

[redacted]

Sent: Thursday, January 26, 2023 11:47 AM

[redacted]

Subject: RE: GE/Southern - Barry 6 CCS Study - Electrical Coordination

EXTERNAL MAIL: Caution Opening Links or Files

Thanks!

[redacted]

Sent: Thursday, January 26, 2023 10:46 AM

[redacted]

Subject: [EXTERNAL] RE: GE/Southern - Barry 6 CCS Study - Electrical Coordination

[redacted]

I'll admit, this was what I could pull together going the lone ranger route; I can ask our experts for clarification but it may take a little longer.

I'll ask about the X/R ratio.
The 2 seconds may have been a misinterpretation on my part of our large transformer standard. I will ask about this as well.

I don't think it is a bad idea to start with your standard assumptions and then just cross-check versus the feedback I receive.

[redacted]

Sent: Thursday, January 26, 2023 10:41 AM

[redacted]

Subject: RE: GE/Southern - Barry 6 CCS Study - Electrical Coordination

EXTERNAL MAIL: Caution Opening Links or Files

[redacted]

1. Will the X/R ratio be available? Or, should Kiewit proceed with an assumed value for now?
2. I notice that the fault clearing time is listed as 2 seconds. That's a pretty long time-just wanting to confirm that.

Thanks,

[redacted]

Sent: Thursday, January 26, 2023 9:52 AM

[redacted]

Subject: [EXTERNAL] RE: GE/Southern - Barry 6 CCS Study - Electrical Coordination

Here's what I've been able to collect, please let me know if there are further questions.

[redacted]

[redacted]

Sent: Thursday, January 26, 2023 8:24 AM

[redacted]

Subject: RE: GE/Southern - Barry 6 CCS Study - Electrical Coordination

[redacted]

This may end up being worth a follow-up call or at least follow-up questions from your team, but I can provide some general information off the bat and then we can regroup from there. The assumption should be that there will need to be a new substation to supply the capture island fed from existing Alabama Power 230kV transmission lines. I already know there isn't remotely enough existing substation capacity at the combined cycle site.

I will go ahead and see what all I can track down from our transmission folks about voltage tolerance range, fault current, and anticipated grid fault clearing time. If there are more (or less) questions based on starting with the assumption above, please let me know.

[redacted]

Sent: Wednesday, January 25, 2023 5:03 PM

[redacted]

Subject: GE/Southern - Barry 6 CCS Study - Electrical Coordination

EXTERNAL MAIL: Caution Opening Links or Files

[redacted]

Looking to start working on coordination for the main electrical interconnection. Initially looking for the information below.

- Do you have a location in mind for where we'd make the power supply tie-in?
- Can you provide some technical information at that connection point:
  - Available three-phase fault current and X/R ratio at point of interconnection
  - Available single-phase fault current and X/R ratio at point of interconnection
  - Point of Interconnection Voltage and tolerance (e.g. 345 kV +/- 5%)
  - Anticipated grid fault clearing time

Let us know if you think a breakout call for this topic might be helpful.

Thanks,

[redacted]

APPENDICES

PROJECT: GE/Southern/Linde Advanced NGCC Integration
JOB NUMBER: 20041223

CALC NO CA-ELE-005

SUBJECT GROUNDING STUDY

BY Nick Mechler **DATE** 5/12/2023 **SHEET REV** A

APPENDIX B

Description	No. of Pages
Ground Grid Layout	1

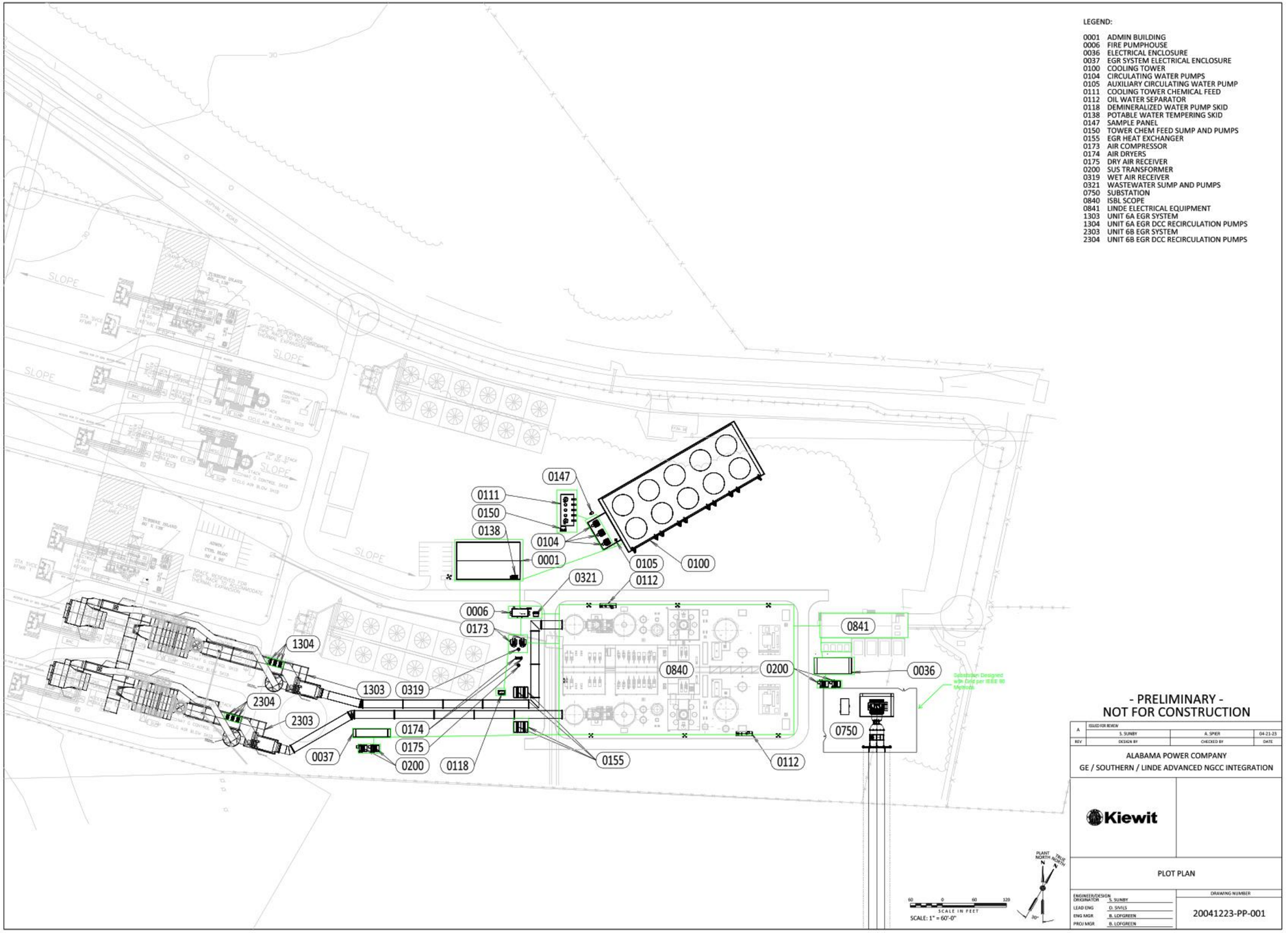
LEGEND:
0001 ADMIN BUILDING
0006 FIRE PUMPHOUSE
0036 ELECTRICAL ENCLOSURE
0037 EGR SYSTEM ELECTRICAL ENCLOSURE
0100 COOLING TOWER
0104 CIRCULATING WATER PUMPS
0105 AUXILIARY CIRCULATING WATER PUMP
0111 COOLING TOWER CHEMICAL FEED
0112 OIL WATER SEPARATOR
0118 DEMINERALIZED WATER PUMP SKID
0138 POTABLE WATER TEMPERING SKID
0147 SAMPLE PANEL
0150 TOWER CHEM FEED SUMP AND PUMPS
0155 EGR HEAT EXCHANGER
0173 AIR COMPRESSOR
0174 AIR DRYERS
0175 DRY AIR RECEIVER
0200 SUS TRANSFORMER
0319 WET AIR RECEIVER
0321 WASTEWATER SUMP AND PUMPS
0750 SUBSTATION
0840 ISBL SCOPE
0841 LINDE ELECTRICAL EQUIPMENT
1303 UNIT 6A EGR SYSTEM
1304 UNIT 6A EGR DCC RECIRCULATION PUMPS
2303 UNIT 6B EGR SYSTEM
2304 UNIT 6B EGR DCC RECIRCULATION PUMPS
SLOPE
- PRELIMINARY -
NOT FOR CONSTRUCTION
ALABAMA POWER COMPANY
GE / SOUTHERN / LINDE ADVANCED NGCC INTEGRATION
Kiewit
PLOT PLAN
SCALE: 1" = 60'-0"
20041223-PP-001

APPENDICES

PROJECT: GE/Southern/Linde Advanced NGCC Integration
JOB NUMBER: 20041223

CALC NO CA-ELE-005

SUBJECT GROUNDING STUDY

BY Nick Mechler **DATE** 5/12/2023 **SHEET REV** A

APPENDIX C

Description	No. of Pages
ETAP Short Circuit Study Report	3

Project:	ETAP	Page:	1
Location:	20.6.0C	Date:	05-08-2023
Contract:		SN:	KIEWITGWN5
Engineer:	Study Case: SC HL HV	Revision:	Base
Filename: GE-Southern		Config.:	Normal

Short-Circuit Summary Report

1/2 Cycle - 3-Phase, LG, LL, & LLG Fault Currents

Prefault Voltage = 105 % of the Bus Nominal Voltage

Bus		3-Phase Fault			Line-to-Ground Fault			Line-to-Line Fault			*Line-to-Line-to-Ground		
ID	kV	Real	Imag.	Mag.	Real	Imag.	Mag.	Real	Imag.	Mag.	Real	Imag.	Mag.
6Z-LVB-MCC-121	0.480	10.123	-55.388	56.305	0.005	0.000	0.005	47.967	8.767	48.762	-47.968	-8.767	48.763
6Z-LVB-MCC-122	0.480	10.123	-55.384	56.301	0.005	0.000	0.005	47.964	8.767	48.758	-47.965	-8.767	48.760
6Z-LVB-MCC-123	0.480	10.122	-54.735	55.663	0.005	0.000	0.005	47.402	8.766	48.206	-47.403	-8.766	48.207
6Z-LVB-MCC-221	0.480	11.239	-56.153	57.266	9.728	-51.723	52.630	48.630	9.734	49.594	44.367	33.699	55.714
6Z-LVB-MCC-222	0.480	11.239	-56.153	57.266	9.728	-51.723	52.630	48.630	9.734	49.594	44.367	33.699	55.714
6Z-LVB-SWG-12	0.480	8.621	-60.095	60.710	0.005	0.000	0.005	52.044	7.466	52.576	-52.045	-7.466	52.578
6Z-LVB-SWG-22	0.480	9.742	-60.652	61.429	8.393	-58.015	58.619	52.526	8.437	53.199	48.909	36.224	60.862
6Z-MVA-SWG-1	13.800	2.271	-36.080	36.151	0.838	-0.025	0.838	31.246	1.967	31.308	-31.456	-1.963	31.517
6Z-MVA-SWG-2	13.800	4.253	-23.809	24.186	0.821	-0.040	0.822	20.619	3.683	20.946	-20.826	-3.676	21.148
6Z-MVC-SWG-11	4.160	1.304	-16.987	17.037	0.835	-0.041	0.836	14.711	1.129	14.754	-14.921	-1.124	14.963
6Z-MVC-SWG-21	4.160	1.448	-16.703	16.766	1.402	-16.716	16.775	14.465	1.254	14.520	13.788	9.619	16.811
Bus2	4.000	4.146	-7.185	8.295	0.735	-0.084	0.740	6.222	3.591	7.184	-6.412	-3.576	7.341
Bus6	13.200	3.277	-29.594	29.775	0.796	-0.029	0.797	25.629	2.838	25.786	-25.829	-2.834	25.984
Bus7	13.800	2.304	-36.026	36.100	0.838	-0.025	0.838	31.199	1.995	31.263	-31.409	-1.991	31.472
Bus8	4.160	2.031	-15.138	15.274	2.024	-14.263	14.406	13.110	1.758	13.228	-14.113	4.983	14.967
Bus9	4.160	2.031	-15.138	15.274	2.024	-14.263	14.406	13.110	1.758	13.228	-14.113	4.983	14.967
Bus18	4.000	4.270	-8.720	9.709	0.753	-0.074	0.756	7.552	3.698	8.408	-7.744	-3.685	8.577
Bus20	4.000	4.270	-8.720	9.709	0.753	-0.074	0.756	7.552	3.698	8.408	-7.744	-3.685	8.577
Bus21	4.000	4.263	-8.427	9.444	0.750	-0.075	0.754	7.298	3.692	8.179	-7.490	-3.679	8.345
Bus22	4.000	4.249	-8.151	9.192	0.747	-0.077	0.751	7.059	3.680	7.960	-7.250	-3.667	8.125
Bus23	4.000	4.249	-8.151	9.192	0.747	-0.077	0.751	7.059	3.680	7.960	-7.250	-3.667	8.125
Bus24	4.000	4.230	-7.889	8.951	0.744	-0.079	0.748	6.832	3.663	7.752	-7.023	-3.650	7.915
Bus25	4.000	4.230	-7.889	8.951	0.744	-0.079	0.748	6.832	3.663	7.752	-7.023	-3.650	7.915
Bus26	4.000	4.263	-8.427	9.444	0.750	-0.075	0.754	7.298	3.692	8.179	-7.490	-3.679	8.345
Bus28	13.200	3.277	-29.594	29.775	0.796	-0.029	0.797	25.629	2.838	25.786	-25.829	-2.834	25.984
Bus29	4.000	4.033	-10.973	11.691	0.771	-0.062	0.774	9.503	3.492	10.125	-9.699	-3.483	10.305
Bus43	4.000	4.146	-7.185	8.295	0.735	-0.084	0.740	6.222	3.591	7.184	-6.412	-3.576	7.341
FIRE PUMP TAP BUS	0.480	8.621	-60.095	60.710	0.005	0.000	0.005	52.044	7.466	52.576	-52.045	-7.466	52.578
HV BUS	230.000	1.845	-53.015	53.047	2.171	-54.950	54.993	45.912	1.598	45.940	-47.182	26.916	54.320
MPT X WINDING	13.800	2.265	-36.085	36.156	0.838	-0.025	0.838	31.250	1.962	31.312	-31.460	-1.958	31.521
SUS 11 Primary	13.800	2.440	-35.741	35.825	0.838	-0.025	0.838	30.953	2.113	31.025	-31.163	-2.109	31.234

Project:	ETAP	Page:	2
Location:	20.6.0C	Date:	05-08-2023
Contract:		SN:	KIEWITGWN5
Engineer:	Study Case: SC HL HV	Revision:	Base
Filename: GE-Southern		Config.:	Normal

1/2 Cycle - 3-Phase, LG, LL, & LLG Fault Currents

Prefault Voltage = 105 % of the Bus Nominal Voltage

Bus		3-Phase Fault			Line-to-Ground Fault			Line-to-Line Fault			*Line-to-Line-to-Ground		
ID	kV	Real	Imag.	Mag.	Real	Imag.	Mag.	Real	Imag.	Mag.	Real	Imag.	Mag.
SUS 11 Secondary	4.160	1.280	-17.076	17.124	0.835	-0.041	0.836	14.789	1.109	14.830	-14.998	-1.104	15.039
SUS 12 Primary	13.800	2.489	-35.567	35.654	0.838	-0.026	0.838	30.802	2.156	30.877	-31.012	-2.152	31.086
SUS 12 Secondary	0.480	7.976	-62.425	62.933	0.005	0.000	0.005	54.062	6.907	54.501	-54.063	-6.907	54.503
SUS 21 PRIMARY	13.800	4.262	-23.533	23.916	0.821	-0.041	0.822	20.380	3.691	20.712	-20.586	-3.684	20.913
SUS 21 SECONDARY	4.160	1.424	-16.751	16.811	1.366	-16.807	16.863	14.507	1.233	14.559	13.853	9.665	16.891
SUS 22 PRIMARY	13.800	4.350	-23.520	23.919	0.821	-0.041	0.822	20.369	3.767	20.715	-20.575	-3.761	20.916
SUS 22 SECONDARY	0.480	9.109	-62.704	63.362	7.826	-61.493	61.989	54.303	7.889	54.873	50.984	38.035	63.608

All fault currents are symmetrical (1/2 Cycle network) values in rms kA.
* LLG fault current is the larger of the two faulted line currents.

Project:	ETAP	Page:	3
Location:	20.6.0C	Date:	05-08-2023
Contract:		SN:	KIEWITGWN5
Engineer:		Revision:	Base
Filename: GE-Southern	Study Case: SC HL HV	Config.:	Normal

Sequence Impedance Summary Report

Bus		Positive Seq. Imp. (ohm)			Negative Seq. Imp. (ohm)			Zero Seq. Imp. (ohm)			Fault Zf (ohm)		
ID	kV	Resistance	Reactance	Impedance	Resistance	Reactance	Impedance	Resistance	Reactance	Impedance	Resistance	Reactance	Impedance
6Z-LVB-MCC-121	0.480	0.00093	0.00508	0.00517	0.00093	0.00508	0.00517	166.27790	0.00641	166.27790	0.00000	0.00000	0.00000
6Z-LVB-MCC-122	0.480	0.00093	0.00508	0.00517	0.00093	0.00508	0.00517	166.27790	0.00641	166.27790	0.00000	0.00000	0.00000
6Z-LVB-MCC-123	0.480	0.00095	0.00514	0.00523	0.00095	0.00514	0.00523	166.27790	0.00641	166.27790	0.00000	0.00000	0.00000
6Z-LVB-MCC-221	0.480	0.00100	0.00498	0.00508	0.00100	0.00498	0.00508	0.00107	0.00634	0.00643	0.00000	0.00000	0.00000
6Z-LVB-MCC-222	0.480	0.00100	0.00498	0.00508	0.00100	0.00498	0.00508	0.00107	0.00634	0.00643	0.00000	0.00000	0.00000
6Z-LVB-SWG-12	0.480	0.00068	0.00474	0.00479	0.00068	0.00474	0.00479	166.27750	0.00542	166.27750	0.00000	0.00000	0.00000
6Z-LVB-SWG-22	0.480	0.00075	0.00468	0.00474	0.00075	0.00468	0.00474	0.00063	0.00538	0.00542	0.00000	0.00000	0.00000
6Z-MVA-SWG-1	13.800	0.01454	0.23095	0.23141	0.01454	0.23095	0.23141	29.89283	0.43762	29.89603	0.00000	0.00000	0.00000
6Z-MVA-SWG-2	13.800	0.06082	0.34051	0.34590	0.06082	0.34051	0.34590	30.36351	0.80962	30.37431	0.00000	0.00000	0.00000
6Z-MVC-SWG-11	4.160	0.01133	0.14759	0.14802	0.01133	0.14759	0.14802	9.01830	0.15084	9.01956	0.00000	0.00000	0.00000
6Z-MVC-SWG-21	4.160	0.01300	0.14985	0.15042	0.01300	0.14985	0.15042	0.01170	0.14973	0.15019	0.00000	0.00000	0.00000
Bus2	4.000	0.14611	0.25318	0.29232	0.14611	0.25318	0.29232	9.47783	0.61394	9.49769	0.00000	0.00000	0.00000
Bus6	13.200	0.02958	0.26712	0.26875	0.02958	0.26712	0.26875	30.04972	0.56162	30.05497	0.00000	0.00000	0.00000
Bus7	13.800	0.01479	0.23127	0.23174	0.01479	0.23127	0.23174	29.89396	0.44031	29.89720	0.00000	0.00000	0.00000
Bus8	4.160	0.02195	0.16364	0.16511	0.02195	0.16364	0.16511	0.02987	0.19267	0.19497	0.00000	0.00000	0.00000
Bus9	4.160	0.02195	0.16364	0.16511	0.02195	0.16364	0.16511	0.02987	0.19267	0.19497	0.00000	0.00000	0.00000
Bus18	4.000	0.10983	0.22430	0.24975	0.10983	0.22430	0.24975	9.35250	0.48764	9.36521	0.00000	0.00000	0.00000
Bus20	4.000	0.10983	0.22430	0.24975	0.10983	0.22430	0.24975	9.35250	0.48764	9.36521	0.00000	0.00000	0.00000
Bus21	4.000	0.11590	0.22911	0.25676	0.11590	0.22911	0.25676	9.37339	0.50869	9.38718	0.00000	0.00000	0.00000
Bus22	4.000	0.12196	0.23392	0.26381	0.12196	0.23392	0.26381	9.39428	0.52974	9.40920	0.00000	0.00000	0.00000
Bus23	4.000	0.12196	0.23392	0.26381	0.12196	0.23392	0.26381	9.39428	0.52974	9.40920	0.00000	0.00000	0.00000
Bus24	4.000	0.12801	0.23874	0.27089	0.12801	0.23874	0.27089	9.41517	0.55079	9.43126	0.00000	0.00000	0.00000
Bus25	4.000	0.12801	0.23874	0.27089	0.12801	0.23874	0.27089	9.41517	0.55079	9.43126	0.00000	0.00000	0.00000
Bus26	4.000	0.11590	0.22911	0.25676	0.11590	0.22911	0.25676	9.37339	0.50869	9.38718	0.00000	0.00000	0.00000
Bus28	13.200	0.02958	0.26712	0.26875	0.02958	0.26712	0.26875	30.04972	0.56162	30.05497	0.00000	0.00000	0.00000
Bus29	4.000	0.07155	0.19468	0.20741	0.07155	0.19468	0.20741	9.22718	0.36134	9.23425	0.00000	0.00000	0.00000
Bus43	4.000	0.14611	0.25318	0.29232	0.14611	0.25318	0.29232	9.47783	0.61394	9.49769	0.00000	0.00000	0.00000
FIRE PUMP TAP BUS	0.480	0.00068	0.00474	0.00479	0.00068	0.00474	0.00479	166.27750	0.00542	166.27750	0.00000	0.00000	0.00000
HV BUS	230.000	0.09144	2.62685	2.62844	0.09144	2.62685	2.62844	0.11733	2.34664	2.34957	0.00000	0.00000	0.00000
MPT X WINDING	13.800	0.01450	0.23093	0.23138	0.01450	0.23093	0.23138	29.89245	0.42990	29.89554	0.00000	0.00000	0.00000
SUS 11 Primary	13.800	0.01591	0.23298	0.23352	0.01591	0.23298	0.23352	29.89510	0.44299	29.89838	0.00000	0.00000	0.00000
SUS 11 Secondary	4.160	0.01101	0.14686	0.14727	0.01101	0.14686	0.14727	9.01760	0.14824	9.01882	0.00000	0.00000	0.00000
SUS 12 Primary	13.800	0.01638	0.23407	0.23464	0.01638	0.23407	0.23464	29.89577	0.44565	29.89910	0.00000	0.00000	0.00000
SUS 12 Secondary	0.480	0.00059	0.00459	0.00462	0.00059	0.00459	0.00462	166.27730	0.00488	166.27730	0.00000	0.00000	0.00000
SUS 21 PRIMARY	13.800	0.06234	0.34420	0.34980	0.06234	0.34420	0.34980	30.37920	0.82202	30.39032	0.00000	0.00000	0.00000
SUS 21 SECONDARY	4.160	0.01270	0.14947	0.15001	0.01270	0.14947	0.15001	0.01094	0.14824	0.14864	0.00000	0.00000	0.00000
SUS 22 PRIMARY	13.800	0.06361	0.34392	0.34975	0.06361	0.34392	0.34975	30.36806	0.81857	30.37909	0.00000	0.00000	0.00000
SUS 22 SECONDARY	0.480	0.00066	0.00454	0.00459	0.00066	0.00454	0.00459	0.00046	0.00488	0.00490	0.00000	0.00000	0.00000

APPENDICES

PROJECT: GE/Southern/Linde Advanced NGCC Integration
JOB NUMBER: 20041223

CALC NO CA-ELE-005

SUBJECT GROUNDING STUDY

BY Nick Mechler **DATE** 5/12/2023 **SHEET REV** A

APPENDIX D

Description	No. of Pages
ETAP Grounding Study Report	1

Project:	**ETAP**	Page:	1
Location:	20.6.0C	Date:	05-08-2023
Contract:		SN:	KIEWITGWN5
Engineer:	Study Case: GRD1	Filename:	GE-Southern

Electrical Transient Analyzer Program

Ground Grid Systems

IEEE Std 80-2000/2013

Number of Ground Conductors:	33
Number of Ground Rods:	64
Total Length of Ground Conductors:	5320.00 ft
Total Length of Ground Rods:	640.00 ft
Total Computational Time:	0.00 minutes

Frequency:	60.0
Unit System:	English
Project Filename:	GE-Southern

Output Filename:
\\kiewitplaza\kegi\Data\ES\20041223-FOA2515_GE_Southern_Linde_Advanced_NGCC_Integration\ENG\Engineering\Elec_Controls\Calcs\ETAP\GE-Southern\Grid1_Untitled.GR1S

Project:	ETAP	Page:	2
Location:	20.6.0C	Date:	05-08-2023
Contract:		SN:	KIEWITGWN5
Engineer:	Study Case: GRD1	Filename:	GE-Southern

Ground Grid Input Data

System Data

			Short-Circuit Current				Fault Duration (Seconds)		
Freq.	Weight	Ambient Temp.	Total Fault Current		Sf Division Factor	Cp Projection Factor	Tf for Total Fault Duration	Tc for Sizing Ground Conductors	Ts for Available Body Current
Hz	kg	°C	kA	X/R	%	%			
60.0	50	40.00	54.993	25.00	50.0	100.0	0.25	0.25	0.25

Soil Data

Surface Material			Upper Layer Soil			Lower Layer Soil	
Material Type	Resistivity ohm.m	Depth ft	Material Type	Resistivity ohm.m	Depth ft	Material Type	Resistivity ohm.m
#57 clean granite	8106.8	0.500	Moist soil	100.0	5.00	Moist soil	100.0

Material Constants

Conductor/Rod	Type	Conductivity %	α_r Factor @ 20 °C 1/°C	K0 @ 0 °C	Fusing Temperature °C	Resistivity of Ground Conductor @ 20°C micro ohm.cm	Thermal Capacity Per Unit Volume J/(cm³.°C)
Conductor & Rod	Copper, annealed soft-drawn	100.0	0.00393	234.0	1083.0	1.72	3.42

Rod Data

Diameter inch	Length ft	No. of Rods	Arrangement	Cost $/Rod
0.750	10.00	64	Rods Throughout Grid Area	100.00

Grid Configuration

Conductor Size AWG/kcmil	Depth ft	Grid Length ft Lx	Grid Length ft Ly	Number of Conductor in X Direction	Number of Conductor in Y Direction	Separation ft in X Direction	Separation ft in Y Direction	Cost $/ft
4/0	1.64	140.00	190.00	19	14	10.8	10.6	3.30

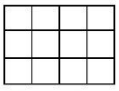

Shape: Rectangular

Cost

Conductor			Rod			
Total No.	Total Length ft	Cost $	Total No.	Total Length ft	Cost $	Total Cost $
33	5320	17556.00	64	640	6400.00	23956.00

Project:	ETAP	Page:	3
Location:	20.6.0C	Date:	05-08-2023
Contract:		SN:	KIEWITGWN5
Engineer:	Study Case: GRD1	Filename:	GE-Southern

Ground Grid Summary Report

Rg	GPR	Touch Potential			Step Potential		
Ground Resistance	Ground Potential Rise	Tolerable	Calculated		Tolerable	Calculated	
ohm	Volts	Volts	Volts	%	Volts	Volts	%
0.935	28926.7	2418.0	2350.9	97.2	8975.9	3414.2	38.0

Total Fault Current:	54.993 kA	Reflection Factor (K):	-0.976
Maximum Grid Current:	30.927 kA	Surface Layer Derating Factor (Cs):	0.775
		Decrement Factor (Df):	1.125

Appendix Z

OSBL Ampacity Study

GE/SOUTHERN/LINDE ADVANCED NGCC INTEGRATION

CABLE AMPACITY STUDY

Kiewit Engineering Group Inc.

REV	DATE	DESCRIPTION	ORIG	CHK	APPR
A	21-APR-2023	ISSUED FOR REVIEW	NJM	RMS	BRL

PROJECT	DOCUMENT NUMBER	REVISION
20041223	20041223-CA-ELE-003	A

Kiewit

PROJECT NAME: GE/Southern/Linde Advanced NGCC Integration

KIEWIT PROJECT NO. 20041223

CALC NO. CA-ELE-003

TITLE: Cable Ampacity Study

ASSUMPTIONS:

No.	Description	Verified By	Initials	Date
1	Soil Thermal Resistivity of 90°C*cm/W			

REFERENCES:

1. Attached:
   a.
   b.
2. Not Attached:
   a. NFPA 70, National Electrical Code (NEC) 2023 edition
   b. Short Circuit Characteristics of Insulated Cable Fourth Edition, ICEA P-32-382-2007
   c. IEEE Recommended Practice for Electric Power Distribution for Industrial Plants, IEEE Standard 141-1993
   d. IEEE Standard Power Cable Ampacity Tables, IEEE Standard 835-1994
   e. Short, Tom. Electric Power Distribution Handbook, 2004
   f. Short Circuit Characteristics of Insulated Cables, ANSI/ICEA P-32-382
   g. Neher-McGrath. Calculation of the Temperature Rise and load Capability of Cable System, 1957

DESIGN BASIS:

1. EPC Project Requirement
2. Environmental Data

RESULTS:

1. See Appendices

CALCULATION SHEET

PROJECT NAME: GE/Southern/Linde Advanced NGCC Integration
PROJECT NUMBER: 20041223

CALC NO CA-ELE-003

SUBJECT: CABLE AMPACITY STUDY **SHEET NO** 1 of 8

BY: Nick Meehler **DATE:** 4/21/2023 **SHEET REV** A

TABLE OF CONTENTS

SECTION	DESCRIPTION	SHEET
1.0	OBJECTIVE	2 of 8
2.0	DESIGN BASIS	2 of 8
3.0	DESGIN CRITERIA	2 of 8
4.0	METHODS AND EQUATIONS	3 of 8
5.0	CONCLUSION	8 of 8

APPENDICES

A.	Table 3 – MV Cable Ampacities
	Table 4 – LV Cable Ampacities
B.	ETAP Underground Heating Studies
C.	Plant General Arrangement
D.	Conceptual Underground Conduit Drawings
E.	Underground Cross Sections
F.	Project Ambient Requirement

CALCULATION SHEET

PROJECT NAME: GE/Southern/Linde Advanced NGCC Integration
PROJECT NUMBER: 20041223

CALC NO CA-ELE-003

SUBJECT: CABLE AMPACITY STUDY **SHEET NO** 2 of 8

BY: Nick Mechler **DATE:** 4/21/2023 **SHEET REV** A

1.0 OBJECTIVE

1.1 The objective of this calculation is to establish the sizing criteria for power cables. The tables contained in this calculation are general guidelines for the GE/Southern project.

2.0 DESIGN BASIS

2.1 The site maximum ambient air temperature has been established at 36.2°C (97°F) per the daily maximum ambient.

2.2 The site average daily maximum ambient soil temperature has been established at 27°C per NRCS soil (at a depth of 40 inches) temperature data at Perdido River Farms, AL.

TABLE 1: UNDERGROUND DUCTBANK DESIGN BASIS

DB SECTION	DESCRIPTION	DEPTH OF DB (in)	SOIL TYPE	SOIL (Rho)	DB (Rho)	FILL TYPE
DB01	PRIMARY RUN	70	N/A	90	55	LIGHT AGGREGATE

** For more information, see Appendix D - Conceptual Underground Conduit Drawings

3.0 DESIGN CRITERIA

3.1 The following cable types will be used for power cables on the GE/Southern Project:

1) Type MV copper single conductor shielded power cable rated for 15 kV
2) Type MV copper single conductor shielded power cable rated for 5/8 kV
3) Type PM & CN copper multi-conductor power cable rated for 600 V
4) Type PS copper single conductor power cable rated for 600 V

3.2 The medium voltage cables (Type MV) shall have type Ethylene Propylene Rubber (EPR) insulation and a flame retardant, sunlight resistant polyvinyl-chloride (PVC) jacket that is rated for continuous use at 105°C.

3.3 The 600V cables shall have type cross-linked polyethylene (XLP) insulation that is rated for continuous use at 90°C.

3.4 Power cables selected for each load shall meet the following requirements:

1) Adequate ampacity for the loads using worst-case ampacity rating based upon the cables' raceway/route
2) Suitable short circuit current withstand capability
3) Suitable voltage drop characteristics

4.0 METHODS AND EQUATIONS

CALCULATION SHEET

PROJECT NAME: GE/Southern/Linde Advanced NGCC Integration
PROJECT NUMBER: 20041223

CALC NO CA-ELE-003

SUBJECT: CABLE AMPACITY STUDY **SHEET NO** 3 of 8

BY: Nick Mechler **DATE:** 4/21/2023 **SHEET REV** A

4.1 The ampacity of cables routed through above ground conduit and cable tray will be based on derating cable ampacities per the requirements of the 2023 edition of National Electric Code (NEC).

4.2 The maximum design ambient dry bulb temperature is 36.2°C, per the information in Appendix F. Any derating of cable to allow for temperature different than the base temperatures of the reference tables will be in accordance with NEC article 310.15(B)(1) for low voltage cables (PM, PS, and C Cables) and NEC article 315.60(D)(4) for medium voltage cables (MV Cables):

$$I' = I \times \sqrt{\frac{T_c - T_a'}{T_c - T_a}}$$

Where:
I' = ampacity corrected for ambient temperature
I = ampacity shown in NEC tables
T_c = temperature rating (°C)
T_a' = new ambient temperature (36.2°C)
T_a = ambient temperature from NEC tables

4.3 Where different max ambient temperatures are required for indoor vs outdoor applications, separate calculations shall be considered. If a cable runs through both indoor and outdoor conditions, the higher temperature derating shall be applied to the cable.

4.4 Each cable will be designed, according to NEC 310.14(A)(2) and 315.60(A)(2), for the routing which results in the lowest ampacity, as long as this portion of the cable is at least 10% of the cable length or 10 feet, whichever is less.

4.5 Requirements of NEC 240.4(D) limit the ampacity of 14 AWG to 15A, 12 AWG to 20A, and 10 AWG to 30A for overcurrent protection.

4.6 Where possible, conduits for medium voltage and 480V power feeds will carry no more than three current carrying conductors. If more than 3 current carrying conductors are installed in a conduit, then the cable ampacity will be adjusted per 310.15(C)(1) of the NEC.

4.7 In accordance with NEC 310.10(G), only power conductors of sizes 1/0AWG or greater may be connected in parallel. Paralleled control conductors (i.e. supplying control power, instruments, contactors, relays, solenoids) shall be permitted to be smaller than 1/0AWG as required to overcome voltage drop. All paralleled conductors shall be installed to comply with the following:

1) Be the same length.
2) Consist of the same conductor material.
3) Be the same size in circular mil area.
4) Have the same insulation type.
5) Be terminated in the same manner.
6) Where installed in separate raceways, each raceway shall contain an equal number of conductors and have the same electrical characteristics.

CALCULATION SHEET

PROJECT NAME: GE/Southern/Linde Advanced NGCC Integration
PROJECT NUMBER: 20041223

CALC NO CA-ELE-003

SUBJECT: CABLE AMPACITY STUDY **SHEET NO** 4 of 8

BY: Nick Mechler **DATE:** 4/21/2023 **SHEET REV** A

4.8 Maximum short circuit currents for conductors are based on the Insulated Cable Engineers Association (ICEA) guideline of insulation damage occurring at 250°C.

4.9 Power cable trays have a 6-inch loading depth and will be filled per NEC Article 392.

4.10 Cables Routed in Above Ground Conduit:

4.10.1 Single Conductor Medium Voltage (MV Cables)

4.10.1.1 Ampacity values from NEC Table 315.60(C)(7) will be used for single conductor MV cable types in conduit and adjusted by the ambient temperature adjustment multiplier.

4.10.2 Multi-conductor 600V (PM and CN Cables) and Single Conductor 600V (PS Cables)

4.10.2.1 Ampacity Values from NEC Table 310.16 will be used for 600V single and multi-conductor power cables (PS, PM, and CN cable types) and adjusted by the ambient temperature adjustment multiplier.

4.11 Cables Routed in Above Ground Cable Tray:

4.11.1 Cable trays will be filled per the requirements of NEC Article 392.

4.11.2 Single Conductor Medium Voltage (MV Cables):

4.11.2.1 For installations in which single conductors 1/0 and larger are installed in uncovered trays per the requirements of NEC article 392.80(B)(2)(1) the ampacity values from NEC Table 315.60(C)(3) shall be adjusted by 0.75 for MV cables installed in uncovered cable tray and 0.70 for MV cables installed in cable tray continuously covered for more than 6 feet. For both the uncovered and covered case, the ambient temperature adjustment multiplier will be applied to the ampacities from NEC table 315.60(C)(3).

4.11.2.2 For installation in which single conductors are installed in a single layer in uncovered trays with a maintained spacing of not less than one cable diameter per the requirements of NEC article 392.80(B)(2)(2) the ampacities shall be taken from NEC Table 315.60(C)(3) and adjusted by the ambient temperature adjustment multiplier.

4.11.3 Multi-conductor 600V (PM and CN Cables):

4.11.3.1 Per the requirements of NEC article 392.80(A)(1) the ampacities shall be taken from table NEC Table 310.16 for PM and CN cables installed in uncovered cable tray and adjusted by the ambient temperature adjustment multiplier.

4.11.3.2 Per the requirements of NEC article 392.80(A)(1)(b) the ampacity values from NEC Table 310.16 shall be adjusted by 0.95 for PM and CN cables installed in cable tray continuously covered for more than 6 feet and by the ambient temperature adjustment multiplier.

4.11.4 Single Conductor 600V (PS Cables):

CALCULATION SHEET

PROJECT NAME: GE/Southern/Linde Advanced NGCC Integration
PROJECT NUMBER: 20041223

CALC NO CA-ELE-003

SUBJECT: CABLE AMPACITY STUDY **SHEET NO** 5 of 8

BY: Nick Mechler **DATE:** 4/21/2023 **SHEET REV** A

4.11.4.1 Per the requirements of NEC article 392.80(A)(2)(b) the ampacity values for cables 1/0 AWG through 500 kcmil shall be taken from NEC Table 310. 17 and shall be adjusted by 0.65 for PS cables installed in uncovered tray and 0.60 for PS cables installed in cable tray continuously covered for more than 6 feet. For both the uncovered and covered case, the ambient temperature adjustment multiplier will be applied to the ampacities from NEC table 310.17.

4.11.4.2 Per the requirements of NEC article 392.80(A)(2)(a) the ampacity values for cables 600kcmil and larger from NEC Table 310.17 shall be adjusted by 0.75 for PS cables installed in uncovered tray and 0.70 for PS cables installed in cable tray continuously covered for more than 6 feet. For both the uncovered and covered case, the ambient temperature adjustment multiplier will be applied to the ampacities from NEC Table 310.17.

4.11.4.3 Where PS cables are installed in a single layer with a maintained space of no less than one cable diameter per the requirements of NEC article 392.80(A)(2)(c) the ampacities shall be taken from NEC Table 310.17 and adjusted by the ambient temperature adjustment multiplier.

4.12 Cables routed in Underground Conduit:

4.12.1 Initial cable sizes for all cables routed in underground conduit will be based on the worst-case above ground ampacity, per the tables in Section 4.0. The cable ampacities for cables installed in underground conduit will be verified using ETAP Version 20.6 simulation for underground conduit heating. ETAP's underground system raceway analysis uses the NEC accepted Neher-McGrath method for modeling underground conduit systems. This simulation will be performed using the actual underground conduit configurations with a top of concrete elevation per Table: Underground Ductbank Design Basis, and normal electrical loading for plant equipment. Duct spacing will be 7.5 inches from center-to-center for all conduits. Specific transient cases shall be allowed for large loads that operate infrequently.

4.12.2 Study Cases:

4.12.2.1 Steady State: The following will be used as global variables in ETAP for steady state heating study cases:

- Method – Neher-McGrath
- Initial/Steady-State Amp – Operating Load
- Update– Currents from Ampacity Calc: Unchecked
- Update– Size from Cable Sizing Calc: Unchecked
- Multiplication Factor (MF) – Use Application MF: Unchecked
- Multiplication Factor (MF) – Use Growth Factor (GF): Unchecked

4.12.2.2 Transient: The following will be used as global variables in ETAP for Transient state heating study cases:

- Transient Temperature Study – Max Time: 3 Hours
- Transient Temperature Study – Output Step Time: 5 Minutes

4.13 Maximum short circuit current:

Medium voltage main feeders to distribution transformers and motors, and low voltage main feeders to motor control centers and switchgear will be sized to fully withstand the fault current available without damage. All other branch circuits will be sized for the full load current or voltage drop required for the circuit. Available fault currents are verified as part of the Electrical System Studies using ETAP Version 20.6.

CALCULATION SHEET

PROJECT NAME: GE/Southern/Linde Advanced NGCC Integration
PROJECT NUMBER: 20041223

CALC NO CA-ELE-003

SUBJECT: CABLE AMPACITY STUDY **SHEET NO** 6 of 8

BY: Nick Mechler **DATE:** 4/21/2023 **SHEET REV** A

Maximum short circuit currents for the conductors are based on the Insulated Cable Engineers Association (ICEA) guideline P-32-382 for short circuit characteristics of insulated cables. The values provided in Table 6 and Table 7 are based on the following equation:

$$\left(\frac{I}{A}\right)^2 t = 0.0297 \cdot \log\left(\frac{T_2 + 234}{T_1 + 234}\right), \text{ where}$$

I = Short Circuit Current (Amps)
A = Conductor Area (cmil)
t = Duration of Short Circuit in Seconds
T_1 = Operating Temp
T_2 = Max Short Circuit Temp

The maximum short circuit temperature rating of the conductor, T_2, is based on the cable insulation. For Thermoset type insulations (XHHW, EPR and XLPE) the insulation can withstand short circuit temperatures up to 250°C before insulation damage occurs. Therefore, 250°C shall be used for T_2.

Medium voltage and low voltage circuits will be designed with a maximum operating temperature of 90°C. Medium voltage conductors may possess MV-105 insulation, but will not be used above 90°C.

Table 2
Allowable short circuit currents for insulated copper conductors
(T_1 = 90°C, T_2 = 250°C)

Size	Area	Maximum Short Circuit Current (duration in cycles)							
AWG/kcmil	kcmil	0.5	1	2	3	5	6	8	10
2	66.36	52,303	36,984	26,151	21,353	16,540	15,098	13,076	11,695
1	83.69	65,962	46,642	32,981	26,929	20,859	19,041	16,490	14,749
1/0	105.6	83,230	58,853	41,615	33,979	26,320	24,027	20,808	18,611
2/0	133.1	104,905	74,179	52,452	42,827	33,174	30,283	26,226	23,457
3/0	167.8	132,254	93,518	66,127	53,993	41,822	38,179	33,064	29,573
4/0	211.6	166,776	117,928	83,388	68,086	52,739	48,144	41,694	37,292
250	250	197,042	139,329	98,521	80,442	62,310	56,881	49,260	44,060
350	350	275,858	195,061	137,929	112,619	87,234	79,633	68,965	61,684
500	500	394,083	278,659	197,042	160,884	124,620	113,762	98,521	88,120
750	750	591,125	417,988	295,562	241,326	186,930	170,643	147,781	132,180

4.14 Voltage Drop:

The voltage drop of each circuit will be verified to be acceptable per NEC 210.19 Informational Note, which states that the steady-state voltage drop in power, heating, or lighting feeders be no more than 3%, and the total drop including feeders and branch circuits be no more than 5% overall. Voltage drop during starting of large motors will be evaluated as part of the Electrical System Studies using ETAP version 20.6.

CALCULATION SHEET

PROJECT NAME: GE/Southern/Linde Advanced NGCC Integration
PROJECT NUMBER: 20041223

CALC NO CA-ELE-003

SUBJECT: CABLE AMPACITY STUDY **SHEET NO** 7 of 8

BY: Nick Mechler **DATE:** 4/21/2023 **SHEET REV** A

4.15 600V Cable Termination Ratings:

Although the specified 600V cables are rated to operate at 90°C continuous, equipment rated 600V or less may have terminations rated less than 90°C. Typically, equipment rated 600V or less has terminations rated 75°C for greater than 100A, or 60°C for less than 100A. For each low voltage circuit, the selected cable will be verified, per NEC 110.14(C)(1), to comply with NEC Table 310.16 at the allowable equipment termination temperature.

4.16 Medium Voltage Cable Termination Ratings:

For each medium voltage circuit, the selected cable will be verified to comply with the NEC Table used for cable derating at the allowable equipment termination temperature per NEC Article 110.40.

4.17 Power Conductor Protection:

For circuits rated 1000V or less and terminated on an overcurrent protection device rated 800A or less, the provisions of NEC article 240.4(B) shall apply.

For circuits rated 1000V or less and terminated on an overcurrent protection device rated over 800A, the provisions of NEC article 240.4(C) shall apply.

For circuits rated over 1000V, the provisions of NEC article 245 shall apply.

5.0 CONCLUSION

The ampacities included in the appendices and the Methods and Equations described in Section 4.0 are to be used as the design guideline for sizing cables. Cables routed in underground conduit will be verified using the tables above, and an ETAP Version 20.6 for underground conduit heating.

APPENDICES

PROJECT: GE/Southern/Linde Advanced NGCC Integration
JOB NUMBER: 20041223

CALC NO CA-ELE-003

SUBJECT CABLE AMPACITY STUDY

BY N. Mechler **DATE** 4/21/2023 **SHEET REV** A

APPENDIX A

Description	No. of Pages
Ampacity Tables	2

TABLE 3: Low Voltage (2000V or Less) Conductor Ampacity - Aboveground Raceway
No more than 3 Current-Carrying Conductors

	Copper			Aluminum		
Cable Size	60°C	75°C	90°C	60°C	75°C	90°C
12	17	23	28	13	18	23
10	26	32	37	22	27	33
8	35	46	52	31	37	42
6	48	60	71	35	46	52
4	62	78	89	48	60	71
3	75	92	108	57	69	80
2	84	106	123	66	83	94
1	97	120	137	75	92	108
1/0	111	139	160	89	111	127
2/0	129	162	184	102	125	142
3/0	146	185	213	115	143	165
4/0	173	213	246	133	167	194
250	191	236	274	151	190	217
350	231	287	331	187	232	265
500	285	352	407	231	287	331
600	311	389	449	253	315	364
750	356	441	506	285	357	411
1000	405	506	582	334	413	473

TABLE 4: Medium Voltage (5kV-35kV) Conductor Ampacity - Aboveground Raceway, No more than 3 Current-Carrying Conductors				
	Copper		Aluminum	
Cable Size	90°C	105°C	90°C	105°C
1/0	202	221	155	174
2/0	233	262	181	205
3/0	269	298	207	231
4/0	306	339	238	267
250	342	375	264	298
350	409	452	321	360
500	497	550	399	442
750	606	673	503	555
1000	700	776	586	658

APPENDICES

PROJECT: GE/Southern/Linde Advanced NGCC Integration
JOB NUMBER: 20041223

CALC NO CA-ELE-003

SUBJECT CABLE AMPACITY STUDY

BY N. Mechler **DATE** 4/21/2023 **SHEET REV** A

APPENDIX B

Description	No. of Pages
ETAP Underground Heating Studies	14

Project:		ETAP	Page: 1
Location:		20.6.0C	Date: 04-12-2023
Contract:			SN: KIEWITRWN9
Engineer:		Study Case: CD	Revision: Base
Filename:	GE-Southern		Study: Steady-State Temperature

Electrical Transient Analyzer Program

Underground Cable Raceway Systems

Cable Temperature Analysis

Method: Neher-McGrath

U/G System ID	Number of Cable Raceways	Number of Ext. Heat Sources
UGS1	2	0

Soil			Temperature Limits	
Type	RHO °C-cm/Watt	Ambient Temperature °C	Alarm °C	Warning °C
Clay Dry	90.0	27.0	90.0	88.0

Multiplying Factors (MF)

Application MF:	Not Considered
Individual Growth Factor:	Not Considered
Global Growth Factor:	100 %

Output File:
\\kiewitplaza\kegi\Data\ES\20041223-FOA2515_GE_Southern_Linde_Advanced_NGCC_Integration\ENG\Engineering\Elec_Controls\Calcs\ETAP\GE-Southern\Untitled.CD1S

Project:		ETAP		Page:	2
Location:		20.6.0C		Date:	04-12-2023
Contract:				SN:	KIEWITRWN9
Engineer:		Study Case: CD		Revision:	Base
Filename:	GE-Southern			Study:	Steady-State Temperature

Underground Cable Raceway Systems (RW1)

Duct Bank Raceway Data:

ID	Reference Distance Horizontal inch	Reference Distance Vertical inch	Dimension Height inch	Dimension Width inch	Fill Type	Fill RHO °C-cm/Watt	Number of Conduits	Number of Cables	Average Distance Center-to-Center inch
RW1	10.00	72.00	48.00	78.00	Light Aggregate	55.0	60	10	7.50

Conduit Data:

ID	Reference Distance Horizontal inch	Reference Distance Vertical inch	Type	Size inch	Thickness inch	OD inch	RHO °C-cm/Watt	Thermal R Ohm-ft	Fill %
Cond1	5.25	5.25	Other	4	0.237	4.500	600.0	0.347	47.20
Cond2	12.75	5.25	Other	4	0.237	4.500	600.0	0.347	47.20
Cond3	20.25	5.25	Other	4	0.237	4.500	600.0	0.347	47.20
Cond4	27.75	5.25	Other	4	0.237	4.500	600.0	0.347	47.20
Cond5	35.25	5.25	Other	4	0.237	4.500	600.0	0.347	47.20
Cond6	42.75	5.25	Other	4	0.237	4.500	600.0	0.347	47.20
Cond7	50.25	5.25	Other	4	0.237	4.500	600.0	0.347	47.20
Cond8	57.75	5.25	Other	4	0.237	4.500	600.0	0.347	47.20
Cond9	65.25	5.25	Other	4	0.237	4.500	600.0	0.347	47.20
Cond10	72.75	5.25	Other	4	0.237	4.500	600.0	0.347	47.20
Cond11	5.25	12.75	Other	4	0.237	4.500	600.0		
Cond12	12.75	12.75	Other	4	0.237	4.500	600.0		
Cond13	20.25	12.75	Other	4	0.237	4.500	600.0		
Cond14	27.75	12.75	Other	4	0.237	4.500	600.0		
Cond15	35.25	12.75	Other	4	0.237	4.500	600.0		
Cond16	42.75	12.75	Other	4	0.237	4.500	600.0		
Cond17	50.25	12.75	Other	4	0.237	4.500	600.0		
Cond18	57.75	12.75	Other	4	0.237	4.500	600.0		
Cond19	65.25	12.75	Other	4	0.237	4.500	600.0		
Cond20	72.75	12.75	Other	4	0.237	4.500	600.0		
Cond21	5.25	20.25	Other	4	0.237	4.500	600.0		
Cond22	12.75	20.25	Other	4	0.237	4.500	600.0		
Cond23	20.25	20.25	Other	4	0.237	4.500	600.0		
Cond24	27.75	20.25	Other	4	0.237	4.500	600.0		
Cond25	35.25	20.25	Other	4	0.237	4.500	600.0		
Cond26	42.75	20.25	Other	4	0.237	4.500	600.0		

Project:		ETAP		Page:	3
Location:		20.6.0C		Date:	04-12-2023
Contract:				SN:	KIEWITRWN9
Engineer:		Study Case: CD		Revision:	Base
Filename:	GE-Southern			Study:	Steady-State Temperature

Conduit Data:

ID	Reference Distance Horizontal inch	Reference Distance Vertical inch	Type	Size inch	Thickness inch	OD inch	RHO °C-cm/Watt	Thermal R Ohm-ft	Fill %
Cond27	50.25	20.25	Other	4	0.237	4.500	600.0		
Cond28	57.75	20.25	Other	4	0.237	4.500	600.0		
Cond29	65.25	20.25	Other	4	0.237	4.500	600.0		
Cond30	72.75	20.25	Other	4	0.237	4.500	600.0		
Cond31	5.25	27.75	Other	4	0.237	4.500	600.0		
Cond32	12.75	27.75	Other	4	0.237	4.500	600.0		
Cond33	20.25	27.75	Other	4	0.237	4.500	600.0		
Cond34	27.75	27.75	Other	4	0.237	4.500	600.0		
Cond35	35.25	27.75	Other	4	0.237	4.500	600.0		
Cond36	42.75	27.75	Other	4	0.237	4.500	600.0		
Cond37	50.25	27.75	Other	4	0.237	4.500	600.0		
Cond38	57.75	27.75	Other	4	0.237	4.500	600.0		
Cond39	65.25	27.75	Other	4	0.237	4.500	600.0		
Cond40	72.75	27.75	Other	4	0.237	4.500	600.0		
Cond41	5.25	35.25	Other	4	0.237	4.500	600.0		
Cond42	12.75	35.25	Other	4	0.237	4.500	600.0		
Cond43	20.25	35.25	Other	4	0.237	4.500	600.0		
Cond44	27.75	35.25	Other	4	0.237	4.500	600.0		
Cond45	35.25	35.25	Other	4	0.237	4.500	600.0		
Cond46	42.75	35.25	Other	4	0.237	4.500	600.0		
Cond47	50.25	35.25	Other	4	0.237	4.500	600.0		
Cond48	57.75	35.25	Other	4	0.237	4.500	600.0		
Cond49	65.25	35.25	Other	4	0.237	4.500	600.0		
Cond50	72.75	35.25	Other	4	0.237	4.500	600.0		
Cond51	5.25	42.75	Other	4	0.237	4.500	600.0		
Cond52	12.75	42.75	Other	4	0.237	4.500	600.0		
Cond53	20.25	42.75	Other	4	0.237	4.500	600.0		
Cond54	27.75	42.75	Other	4	0.237	4.500	600.0		
Cond55	35.25	42.75	Other	4	0.237	4.500	600.0		
Cond56	42.75	42.75	Other	4	0.237	4.500	600.0		
Cond57	50.25	42.75	Other	4	0.237	4.500	600.0		
Cond58	57.75	42.75	Other	4	0.237	4.500	600.0		
Cond59	65.25	42.75	Other	4	0.237	4.500	600.0		

Project:		ETAP		Page:	4
Location:		20.6.0C		Date:	04-12-2023
Contract:				SN:	KIEWITRWN9
Engineer:		Study Case:	CD	Revision:	Base
Filename:	GE-Southern			Study:	Steady-State Temperature

Conduit Data:

ID	Reference Distance Horizontal inch	Reference Distance Vertical inch	Type	Size inch	Thickness inch	OD inch	RHO °C-cm/Watt	Thermal R Ohm-ft	Fill %
Cond60	72.75	42.75	Other	4	0.237	4.500	600.0		

* Warning - Industry representatives recommend avoiding a jam ratio of 2.8 to 3.2.
\# Alarm - Cable jamming may occur when jam ratio is in between 2.74 and 2.8.

Cable Data:

ID	Size	Rated kV	Current Amp	Individual Growth Factor %	Load Factor %	Conductor No.	Conductor Type	Conductor Per Phase	Conductor Construction	Insulation Type	Insulation Thickness mil	Insulation Thermal R ohm-ft
Linde 1 Feeder	500	15.000	1824.94	100	100	1/C	CU	10	ConRnd-NT	RUBBER610	295.0	1.735

ID	Shielding Status	Shielding Type	Shielding Thickness mil	Filler Type	Sheath Type	Sheath Thickness mil	Bedding Type	Bedding Thickness mil	Bedding Thermal R ohm-ft
Linde 1 Feeder	Yes	Copper	5.0			0.0	NONE	0.0	0.000

ID	Armor Type	Armor Diameter mil	End Connection*	Jacket Type	Jacket Thickness mil	Rdc @ 25°C µohm/ft	Outside Diameter inch
Linde 1 Feeder		0.0	Open	NONE		21.63	1.60

* End Connection is flagged as "Grounded" if any of the metallic layers (Shield/Sheath/Armor) is grounded at both ends.

Project:	ETAP	Page:	5
Location:	20.6.0C	Date:	04-12-2023
Contract:		SN:	KIEWITRWN9
Engineer:	Study Case: CD	Revision:	Base
Filename:	GE-Southern	Study:	Steady-State Temperature

Analysis Results (RW1)

No.	Cable ID	Conduit/Location ID	Conductor per Cable	Energized Conductor per Cable	Rdc @ Final Temp. µOhm/ft	Dielectric Losses Watt/ft	Yc	Ys	Conductor Losses Watt/ft	Current Amp	Temp. °C
1	Linde 1 Feeder-1A	Cond1	1	1	25.06	0.148	0.036	0.008	0.865	182.49	66.13
2	Linde 1 Feeder-1B	Cond1	1	1	25.06	0.148	0.036	0.008	0.865	182.49	66.13
3	Linde 1 Feeder-1C	Cond1	1	1	25.06	0.148	0.036	0.008	0.865	182.49	66.13
4	Linde 1 Feeder-2A	Cond2	1	1	25.27	0.148	0.035	0.008	0.871	182.49	68.59
5	Linde 1 Feeder-2B	Cond2	1	1	25.27	0.148	0.035	0.008	0.871	182.49	68.59
6	Linde 1 Feeder-2C	Cond2	1	1	25.27	0.148	0.035	0.008	0.871	182.49	68.59
7	Linde 1 Feeder-3A	Cond3	1	1	25.42	0.148	0.035	0.008	0.876	182.49	70.41
8	Linde 1 Feeder-3B	Cond3	1	1	25.42	0.148	0.035	0.008	0.876	182.49	70.41
9	Linde 1 Feeder-3C	Cond3	1	1	25.42	0.148	0.035	0.008	0.876	182.49	70.41
10	Linde 1 Feeder-4A	Cond4	1	1	25.54	0.148	0.035	0.008	0.880	182.49	71.86
11	Linde 1 Feeder-4B	Cond4	1	1	25.54	0.148	0.035	0.008	0.880	182.49	71.86
12	Linde 1 Feeder-4C	Cond4	1	1	25.54	0.148	0.035	0.008	0.880	182.49	71.86
13	Linde 1 Feeder-5A	Cond5	1	1	25.64	0.148	0.034	0.008	0.883	182.49	73.03
14	Linde 1 Feeder-5B	Cond5	1	1	25.64	0.148	0.034	0.008	0.883	182.49	73.03
15	Linde 1 Feeder-5C	Cond5	1	1	25.64	0.148	0.034	0.008	0.883	182.49	73.03
16	Linde 1 Feeder-6A	Cond6	1	1	25.72	0.148	0.034	0.008	0.886	182.49	73.99
17	Linde 1 Feeder-6B	Cond6	1	1	25.72	0.148	0.034	0.008	0.886	182.49	73.99
18	Linde 1 Feeder-6C	Cond6	1	1	25.72	0.148	0.034	0.008	0.886	182.49	73.99
19	Linde 1 Feeder-7A	Cond7	1	1	25.78	0.148	0.034	0.008	0.888	182.49	74.79
20	Linde 1 Feeder-7B	Cond7	1	1	25.78	0.148	0.034	0.008	0.888	182.49	74.79
21	Linde 1 Feeder-7C	Cond7	1	1	25.78	0.148	0.034	0.008	0.888	182.49	74.79
22	Linde 1 Feeder-8A	Cond8	1	1	25.84	0.148	0.034	0.008	0.890	182.49	75.45
23	Linde 1 Feeder-8B	Cond8	1	1	25.84	0.148	0.034	0.008	0.890	182.49	75.45
24	Linde 1 Feeder-8C	Cond8	1	1	25.84	0.148	0.034	0.008	0.890	182.49	75.45
25	Linde 1 Feeder-9A	Cond9	1	1	25.89	0.148	0.034	0.008	0.891	182.49	76.01
26	Linde 1 Feeder-9B	Cond9	1	1	25.89	0.148	0.034	0.008	0.891	182.49	76.01
27	Linde 1 Feeder-9C	Cond9	1	1	25.89	0.148	0.034	0.008	0.891	182.49	76.01
28	Linde 1 Feeder-10A	Cond10	1	1	25.93	0.148	0.034	0.008	0.893	182.49	76.50
29	Linde 1 Feeder-10B	Cond10	1	1	25.93	0.148	0.034	0.008	0.893	182.49	76.50
30	Linde 1 Feeder-10C	Cond10	1	1	25.93	0.148	0.034	0.008	0.893	182.49	76.50

Yc = Increment of AC/DC resistance ratio due to AC current skin and proximity effect
Ys = Increment of AC/DC resistance ratio due to losses of circulation and eddy current effect in shield, sheath and armor

Project:		ETAP		Page:	6
Location:		20.6.0C		Date:	04-12-2023
Contract:				SN:	KIEWITRWN9
Engineer:		Study Case: CD		Revision:	Base
Filename:	GE-Southern			Study:	Steady-State Temperature

Summary (RW1)

No.	Cable ID	Conduit/Location ID	Size	Current Amp	Temp. °C
1	Linde 1 Feeder-1A	Cond1	500	182.49	66.13
2	Linde 1 Feeder-1B	Cond1	500	182.49	66.13
3	Linde 1 Feeder-1C	Cond1	500	182.49	66.13
4	Linde 1 Feeder-2A	Cond2	500	182.49	68.59
5	Linde 1 Feeder-2B	Cond2	500	182.49	68.59
6	Linde 1 Feeder-2C	Cond2	500	182.49	68.59
7	Linde 1 Feeder-3A	Cond3	500	182.49	70.41
8	Linde 1 Feeder-3B	Cond3	500	182.49	70.41
9	Linde 1 Feeder-3C	Cond3	500	182.49	70.41
10	Linde 1 Feeder-4A	Cond4	500	182.49	71.86
11	Linde 1 Feeder-4B	Cond4	500	182.49	71.86
12	Linde 1 Feeder-4C	Cond4	500	182.49	71.86
13	Linde 1 Feeder-5A	Cond5	500	182.49	73.03
14	Linde 1 Feeder-5B	Cond5	500	182.49	73.03
15	Linde 1 Feeder-5C	Cond5	500	182.49	73.03
16	Linde 1 Feeder-6A	Cond6	500	182.49	73.99
17	Linde 1 Feeder-6B	Cond6	500	182.49	73.99
18	Linde 1 Feeder-6C	Cond6	500	182.49	73.99
19	Linde 1 Feeder-7A	Cond7	500	182.49	74.79
20	Linde 1 Feeder-7B	Cond7	500	182.49	74.79
21	Linde 1 Feeder-7C	Cond7	500	182.49	74.79
22	Linde 1 Feeder-8A	Cond8	500	182.49	75.45
23	Linde 1 Feeder-8B	Cond8	500	182.49	75.45
24	Linde 1 Feeder-8C	Cond8	500	182.49	75.45
25	Linde 1 Feeder-9A	Cond9	500	182.49	76.01
26	Linde 1 Feeder-9B	Cond9	500	182.49	76.01
27	Linde 1 Feeder-9C	Cond9	500	182.49	76.01
28	Linde 1 Feeder-10A	Cond10	500	182.49	76.50
29	Linde 1 Feeder-10B	Cond10	500	182.49	76.50
30	Linde 1 Feeder-10C	Cond10	500	182.49	76.50

F Indicates fixed cable size in cable sizing calculations or fixed cable ampacity in uniform ampacity calculation
* Indicates a cable temperature exceeding its limit
# Indicates a cable temperature exceeding its marginal limit

Project:		ETAP		Page:	7
Location:		20.6.0C		Date:	04-12-2023
Contract:				SN:	KIEWITRWN9
Engineer:		Study Case: CD		Revision:	Base
Filename:	GE-Southern			Study:	Steady-State Temperature

Underground Cable Raceway Systems (RW2)

Duct Bank Raceway Data:

ID	Reference Distance Horizontal inch	Reference Distance Vertical inch	Dimension Height inch	Dimension Width inch	Fill Type	Fill RHO °C-cm/Watt	Number of Conduits	Number of Cables	Average Distance Center-to-Center inch
RW2	88.50	72.00	48.00	78.00	Light Aggregate	55.0	60	15	7.50

Conduit Data:

ID	Reference Distance Horizontal inch	Reference Distance Vertical inch	Type	Size inch	Thickness inch	OD inch	RHO °C-cm/Watt	Thermal R Ohm-ft	Fill %
Cond61	5.25	5.25	Other	4	0.237	4.500	600.0	0.347	42.20
Cond62	12.75	5.25	Other	4	0.237	4.500	600.0	0.347	42.20
Cond63	20.25	5.25	Other	4	0.237	4.500	600.0	0.347	42.20
Cond64	27.75	5.25	Other	4	0.237	4.500	600.0	0.347	12.45
Cond65	35.25	5.25	Other	4	0.237	4.500	600.0	0.347	12.45
Cond66	42.75	5.25	Other	4	0.237	4.500	600.0	0.347	12.45
Cond67	50.25	5.25	Other	4	0.237	4.500	600.0	0.347	12.45
Cond68	57.75	5.25	Other	4	0.237	4.500	600.0	0.347	12.45
Cond69	65.25	5.25	Other	4	0.237	4.500	600.0	0.347	12.45
Cond70	72.75	5.25	Other	4	0.237	4.500	600.0	0.347	12.45
Cond71	5.25	12.75	Other	4	0.237	4.500	600.0	0.347	42.20
Cond72	12.75	12.75	Other	4	0.237	4.500	600.0		
Cond73	20.25	12.75	Other	4	0.237	4.500	600.0		
Cond74	27.75	12.75	Other	4	0.237	4.500	600.0		
Cond75	35.25	12.75	Other	4	0.237	4.500	600.0		
Cond76	42.55	12.85	Other	4.3	0.237	4.300	600.0		
Cond77	50.25	12.75	Other	4	0.237	4.500	600.0	0.347	12.45
Cond78	57.75	12.75	Other	4	0.237	4.500	600.0	0.347	12.45
Cond79	65.25	12.75	Other	4	0.237	4.500	600.0	0.347	12.45
Cond80	72.75	12.75	Other	4	0.237	4.500	600.0	0.347	12.45
Cond81	5.25	20.25	Other	4	0.237	4.500	600.0		
Cond82	12.75	20.25	Other	4	0.237	4.500	600.0		
Cond83	20.25	20.25	Other	4	0.237	4.500	600.0		
Cond84	27.75	20.25	Other	4	0.237	4.500	600.0		
Cond85	35.25	20.25	Other	4	0.237	4.500	600.0		
Cond86	42.75	20.25	Other	4	0.237	4.500	600.0		

Project:	ETAP	Page:	8
Location:	20.6.0C	Date:	04-12-2023
Contract:		SN:	KIEWITRWN9
Engineer:	Study Case: CD	Revision:	Base
Filename: GE-Southern		Study:	Steady-State Temperature

Conduit Data:

ID	Reference Distance Horizontal inch	Reference Distance Vertical inch	Type	Size inch	Thickness inch	OD inch	RHO °C-cm/Watt	Thermal R Ohm-ft	Fill %
Cond87	50.25	20.25	Other	4	0.237	4.500	600.0		
Cond88	57.75	20.25	Other	4	0.237	4.500	600.0		
Cond89	65.25	20.25	Other	4	0.237	4.500	600.0		
Cond90	72.75	20.25	Other	4	0.237	4.500	600.0		
Cond91	5.25	27.75	Other	4	0.237	4.500	600.0		
Cond92	12.75	27.75	Other	4	0.237	4.500	600.0		
Cond93	20.25	27.75	Other	4	0.237	4.500	600.0		
Cond94	27.75	27.75	Other	4	0.237	4.500	600.0		
Cond95	35.25	27.75	Other	4	0.237	4.500	600.0		
Cond96	42.75	27.75	Other	4	0.237	4.500	600.0		
Cond97	50.25	27.75	Other	4	0.237	4.500	600.0		
Cond98	57.75	27.75	Other	4	0.237	4.500	600.0		
Cond99	65.25	27.75	Other	4	0.237	4.500	600.0		
Cond100	72.75	27.75	Other	4	0.237	4.500	600.0		
Cond101	5.25	35.25	Other	4	0.237	4.500	600.0		
Cond102	12.75	35.25	Other	4	0.237	4.500	600.0		
Cond103	20.25	35.25	Other	4	0.237	4.500	600.0		
Cond104	27.75	35.25	Other	4	0.237	4.500	600.0		
Cond105	35.25	35.25	Other	4	0.237	4.500	600.0		
Cond106	42.75	35.25	Other	4	0.237	4.500	600.0		
Cond107	50.25	35.25	Other	4	0.237	4.500	600.0		
Cond108	57.75	35.25	Other	4	0.237	4.500	600.0		
Cond109	65.25	35.25	Other	4	0.237	4.500	600.0		
Cond110	72.75	35.25	Other	4	0.237	4.500	600.0		
Cond111	5.25	42.75	Other	4	0.237	4.500	600.0		
Cond112	12.75	42.75	Other	4	0.237	4.500	600.0		
Cond113	20.25	42.75	Other	4	0.237	4.500	600.0		
Cond114	27.75	42.75	Other	4	0.237	4.500	600.0		
Cond115	35.25	42.75	Other	4	0.237	4.500	600.0		
Cond116	42.75	42.75	Other	4	0.237	4.500	600.0		
Cond117	50.25	42.75	Other	4	0.237	4.500	600.0		
Cond118	57.75	42.75	Other	4	0.237	4.500	600.0		
Cond119	65.25	42.75	Other	4	0.237	4.500	600.0		

Project:		ETAP		Page:	9
Location:		20.6.0C		Date:	04-12-2023
Contract:				SN:	KIEWITRWN9
Engineer:		Study Case:	CD	Revision:	Base
Filename:	GE-Southern			Study:	Steady-State Temperature

Conduit Data:

ID	Reference Distance Horizontal inch	Reference Distance Vertical inch	Type	Size inch	Thickness inch	OD inch	RHO °C-cm/Watt	Thermal R Ohm-ft	Fill %
Cond120	72.75	42.75	Other	4	0.237	4.500	600.0		

* Warning - Industry representatives recommend avoiding a jam ratio of 2.8 to 3.2.
\# Alarm - Cable jamming may occur when jam ratio is in between 2.74 and 2.8.

Cable Data:

ID	Size	Rated kV	Current Amp	Individual Growth Factor %	Load Factor %	Conductor No.	Conductor Type	Conductor Per Phase	Conductor Construction	Insulation Type	Insulation Thickness mil	Insulation Thermal R ohm-ft
6Z-CWS-MFN-01A-100	1/0	5.000	33.61	100	100	1/C	CU	1	ConRnd-NT	EPR	125.0	1.092
6Z-CWS-MFN-01B-100	1/0	5.000	33.61	100	100	1/C	CU	1	ConRnd-NT	EPR	125.0	1.092
6Z-CWS-MFN-01C-100	1/0	5.000	33.62	100	100	1/C	CU	1	ConRnd-NT	EPR	125.0	1.092
6Z-CWS-MFN-01D-100	1/0	5.000	33.62	100	100	1/C	CU	1	ConRnd-NT	EPR	125.0	1.092
6Z-CWS-MFN-01E-100	1/0	5.000	33.62	100	100	1/C	CU	1	ConRnd-NT	EPR	125.0	1.092
6Z-CWS-MFN-01F-100	1/0	5.000	33.62	100	100	1/C	CU	1	ConRnd-NT	EPR	125.0	1.092
6Z-CWS-MFN-01G-100	1/0	5.000	33.62	100	100	1/C	CU	1	ConRnd-NT	EPR	125.0	1.092
6Z-CWS-MFN-01H-100	1/0	5.000	33.62	100	100	1/C	CU	1	ConRnd-NT	EPR	125.0	1.092
6Z-CWS-MFN-01I-100	1/0	5.000	33.63	100	100	1/C	CU	1	ConRnd-NT	EPR	125.0	1.092
6Z-CWS-MFN-01J-100	1/0	5.000	33.63	100	100	1/C	CU	1	ConRnd-NT	EPR	125.0	1.092
6Z-CWS-MPM-01A-100	500	15.000	196.38	100	100	1/C	CU	1	ConRnd-NT	EPR	175.0	0.762
6Z-CWS-MPM-01B-100	500	15.000	196.38	100	100	1/C	CU	1	ConRnd-NT	EPR	175.0	0.762
6Z-CWS-MPM-01C-100	500	15.000	0.00	100	100	1/C	CU	1	ConRnd-NT	EPR	175.0	0.762
6Z-CWS-MPM-02-100	1/0	5.000	60.26	100	100	1/C	CU	1	ConRnd-NT	EPR	125.0	1.092
6Z-MVA-SWG-2-100	500	15.000	267.10	100	100	1/C	CU	1	ConRnd-NT	EPR	175.0	0.762

ID	Shielding Status	Shielding Type	Shielding Thickness mil	Filler Type	Sheath Type	Sheath Thickness mil	Bedding Type	Bedding Thickness mil	Bedding Thermal R ohm-ft
6Z-CWS-MFN-01A-100	Yes	Copper	5.0			0.0	NONE	0.0	0.000
6Z-CWS-MFN-01B-100	Yes	Copper	5.0			0.0	NONE	0.0	0.000
6Z-CWS-MFN-01C-100	Yes	Copper	5.0			0.0	NONE	0.0	0.000
6Z-CWS-MFN-01D-100	Yes	Copper	5.0			0.0	NONE	0.0	0.000
6Z-CWS-MFN-01E-100	Yes	Copper	5.0			0.0	NONE	0.0	0.000
6Z-CWS-MFN-01F-100	Yes	Copper	5.0			0.0	NONE	0.0	0.000

Project:		ETAP		Page:	10
Location:		20.6.0C		Date:	04-12-2023
Contract:				SN:	KIEWITRWN9
Engineer:		Study Case: CD		Revision:	Base
Filename:	GE-Southern			Study:	Steady-State Temperature

	Shielding				Sheath		Bedding		
ID	Status	Type	Thickness mil	Filler Type	Type	Thickness mil	Type	Thickness mil	Thermal R ohm-ft
6Z-CWS-MFN-01G-100	Yes	Copper	5.0			0.0	NONE	0.0	0.000
6Z-CWS-MFN-01H-100	Yes	Copper	5.0			0.0	NONE	0.0	0.000
6Z-CWS-MFN-01I-100	Yes	Copper	5.0			0.0	NONE	0.0	0.000
6Z-CWS-MFN-01J-100	Yes	Copper	5.0			0.0	NONE	0.0	0.000
6Z-CWS-MPM-01A-100	Yes	Copper	5.0			0.0	NONE	0.0	0.000
6Z-CWS-MPM-01B-100	Yes	Copper	5.0			0.0	NONE	0.0	0.000
6Z-CWS-MPM-01C-100	Yes	Copper	5.0			0.0	NONE	0.0	0.000
6Z-CWS-MPM-02-100	Yes	Copper	5.0			0.0	NONE	0.0	0.000
6Z-MVA-SWG-2-100	Yes	Copper	5.0			0.0	NONE	0.0	0.000

	Armor			Jacket		Rdc	Outside
ID	Type	Diameter mil	End Connection*	Type	Thickness mil	@ 25°C µohm/ft	Diameter inch
6Z-CWS-MFN-01A-100		0.0	Open	PVC	60.00	102.00	0.82
6Z-CWS-MFN-01B-100		0.0	Open	PVC	60.00	102.00	0.82
6Z-CWS-MFN-01C-100		0.0	Open	PVC	60.00	102.00	0.82
6Z-CWS-MFN-01D-100		0.0	Open	PVC	60.00	102.00	0.82
6Z-CWS-MFN-01E-100		0.0	Open	PVC	60.00	102.00	0.82
6Z-CWS-MFN-01F-100		0.0	Open	PVC	60.00	102.00	0.82
6Z-CWS-MFN-01G-100		0.0	Open	PVC	60.00	102.00	0.82
6Z-CWS-MFN-01H-100		0.0	Open	PVC	60.00	102.00	0.82
6Z-CWS-MFN-01I-100		0.0	Open	PVC	60.00	102.00	0.82
6Z-CWS-MFN-01J-100		0.0	Open	PVC	60.00	102.00	0.82
6Z-CWS-MPM-01A-100		0.0	Open	PVC	80.00	21.60	1.51
6Z-CWS-MPM-01B-100		0.0	Open	PVC	80.00	21.60	1.51
6Z-CWS-MPM-01C-100		0.0	Open	PVC	80.00	21.60	1.51
6Z-CWS-MPM-02-100		0.0	Open	PVC	60.00	102.00	0.82
6Z-MVA-SWG-2-100		0.0	Open	PVC	80.00	21.60	1.51

* End Connection is flagged as "Grounded" if any of the metallic layers (Shield/Sheath/Armor) is grounded at both ends.

Project:	ETAP	Page:	11
Location:	20.6.0C	Date:	04-12-2023
Contract:		SN:	KIEWITRWN9
Engineer:	Study Case: CD	Revision:	Base
Filename: GE-Southern		Study:	Steady-State Temperature

Analysis Results (RW2)

No.	Cable ID	Conduit/Location ID	Conductor per Cable	Energized Conductor per Cable	Rdc @ Final Temp. µOhm/ft	Dielectric Losses Watt/ft	Yc	Ys	Conductor Losses Watt/ft	Current Amp	Temp. °C
1	6Z-CWS-MFN-01A-100-1C	Cond64	1	1	115.92	0.004	0.002	0.001	0.131	33.61	60.43
2	6Z-CWS-MFN-01A-100-1B	Cond64	1	1	115.92	0.004	0.002	0.001	0.131	33.61	60.43
3	6Z-CWS-MFN-01A-100-1A	Cond64	1	1	115.92	0.004	0.002	0.001	0.131	33.61	60.43
4	6Z-CWS-MFN-01B-100-1C	Cond65	1	1	114.87	0.004	0.002	0.001	0.130	33.61	57.75
5	6Z-CWS-MFN-01B-100-1B	Cond65	1	1	114.87	0.004	0.002	0.001	0.130	33.61	57.75
6	6Z-CWS-MFN-01B-100-1A	Cond65	1	1	114.87	0.004	0.002	0.001	0.130	33.61	57.75
7	6Z-CWS-MFN-01C-100-1C	Cond66	1	1	114.10	0.004	0.002	0.001	0.129	33.62	55.79
8	6Z-CWS-MFN-01C-100-1B	Cond66	1	1	114.10	0.004	0.002	0.001	0.129	33.62	55.79
9	6Z-CWS-MFN-01C-100-1A	Cond66	1	1	114.10	0.004	0.002	0.001	0.129	33.62	55.79
10	6Z-CWS-MFN-01D-100-1C	Cond67	1	1	113.47	0.004	0.002	0.001	0.128	33.62	54.18
11	6Z-CWS-MFN-01D-100-1B	Cond67	1	1	113.47	0.004	0.002	0.001	0.128	33.62	54.18
12	6Z-CWS-MFN-01D-100-1A	Cond67	1	1	113.47	0.004	0.002	0.001	0.128	33.62	54.18
13	6Z-CWS-MFN-01E-100-1C	Cond68	1	1	112.84	0.004	0.002	0.001	0.128	33.62	52.58
14	6Z-CWS-MFN-01E-100-1B	Cond68	1	1	112.84	0.004	0.002	0.001	0.128	33.62	52.58
15	6Z-CWS-MFN-01E-100-1A	Cond68	1	1	112.84	0.004	0.002	0.001	0.128	33.62	52.58
16	6Z-CWS-MFN-01F-100-1C	Cond69	1	1	112.22	0.004	0.002	0.001	0.127	33.62	51.01
17	6Z-CWS-MFN-01F-100-1B	Cond69	1	1	112.22	0.004	0.002	0.001	0.127	33.62	51.01
18	6Z-CWS-MFN-01F-100-1A	Cond69	1	1	112.22	0.004	0.002	0.001	0.127	33.62	51.01
19	6Z-CWS-MFN-01G-100-1C	Cond70	1	1	111.61	0.004	0.002	0.001	0.126	33.62	49.46
20	6Z-CWS-MFN-01G-100-1B	Cond70	1	1	111.61	0.004	0.002	0.001	0.126	33.62	49.46
21	6Z-CWS-MFN-01G-100-1A	Cond70	1	1	111.61	0.004	0.002	0.001	0.126	33.62	49.46
22	6Z-CWS-MFN-01H-100-1C	Cond80	1	1	111.85	0.004	0.002	0.001	0.127	33.62	50.07
23	6Z-CWS-MFN-01H-100-1B	Cond80	1	1	111.85	0.004	0.002	0.001	0.127	33.62	50.07
24	6Z-CWS-MFN-01H-100-1A	Cond80	1	1	111.85	0.004	0.002	0.001	0.127	33.62	50.07
25	6Z-CWS-MFN-01I-100-1C	Cond79	1	1	112.47	0.004	0.002	0.001	0.127	33.63	51.64
26	6Z-CWS-MFN-01I-100-1B	Cond79	1	1	112.47	0.004	0.002	0.001	0.127	33.63	51.64
27	6Z-CWS-MFN-01I-100-1A	Cond79	1	1	112.47	0.004	0.002	0.001	0.127	33.63	51.64
28	6Z-CWS-MFN-01J-100-1C	Cond78	1	1	113.11	0.004	0.002	0.001	0.128	33.63	53.25
29	6Z-CWS-MFN-01J-100-1B	Cond78	1	1	113.11	0.004	0.002	0.001	0.128	33.63	53.25
30	6Z-CWS-MFN-01J-100-1A	Cond78	1	1	113.11	0.004	0.002	0.001	0.128	33.63	53.25
31	6Z-CWS-MPM-01A-100-1A	Cond61	1	1	25.68	0.066	0.036	0.005	1.026	196.38	74.07
32	6Z-CWS-MPM-01A-100-1B	Cond61	1	1	25.68	0.066	0.036	0.005	1.026	196.38	74.07
33	6Z-CWS-MPM-01A-100-1C	Cond61	1	1	25.68	0.066	0.036	0.005	1.026	196.38	74.07
34	6Z-CWS-MPM-01B-100-1A	Cond63	1	1	25.31	0.066	0.037	0.005	1.012	196.38	69.59
35	6Z-CWS-MPM-01B-100-1B	Cond63	1	1	25.31	0.066	0.037	0.005	1.012	196.38	69.59
36	6Z-CWS-MPM-01B-100-1C	Cond63	1	1	25.31	0.066	0.037	0.005	1.012	196.38	69.59

Project:		ETAP		Page:	12
Location:		20.6.0C		Date:	04-12-2023
Contract:				SN:	KIEWITRWN9
Engineer:		Study Case: CD		Revision:	Base
Filename:	GE-Southern			Study:	Steady-State Temperature

Analysis Results (RW2)

No.	Cable ID	Conduit/Location ID	Conductor per Cable	Energized Conductor per Cable	Rdc @ Final Temp. µOhm/ft	Dielectric Losses Watt/ft	Yc	Ys	Conductor Losses Watt/ft	Current Amp	Temp. °C
37	6Z-CWS-MPM-01C-100-1A	Cond71	1	0	25.00	0.000	0.037	0.005	0.000	0.00	65.88
38	6Z-CWS-MPM-01C-100-1B	Cond71	1	0	25.00	0.000	0.037	0.005	0.000	0.00	65.88
39	6Z-CWS-MPM-01C-100-1C	Cond71	1	0	25.00	0.000	0.037	0.005	0.000	0.00	65.88
40	6Z-CWS-MPM-02-100-1C	Cond77	1	1	114.87	0.004	0.002	0.001	0.418	60.26	57.75
41	6Z-CWS-MPM-02-100-1B	Cond77	1	1	114.87	0.004	0.002	0.001	0.418	60.26	57.75
42	6Z-CWS-MPM-02-100-1A	Cond77	1	1	114.87	0.004	0.002	0.001	0.418	60.26	57.75
43	6Z-MVA-SWG-2-100-1A	Cond62	1	1	26.06	0.066	0.035	0.005	1.923	267.10	78.56
44	6Z-MVA-SWG-2-100-1B	Cond62	1	1	26.06	0.066	0.035	0.005	1.923	267.10	78.56
45	6Z-MVA-SWG-2-100-1C	Cond62	1	1	26.06	0.066	0.035	0.005	1.923	267.10	78.56

Yc = Increment of AC/DC resistance ratio due to AC current skin and proximity effect
Ys = Increment of AC/DC resistance ratio due to losses of circulation and eddy current effect in shield, sheath and armor

Project:	ETAP	Page:	13
Location:	20.6.0C	Date:	04-12-2023
Contract:		SN:	KIEWITRWN9
Engineer:	Study Case: CD	Revision:	Base
Filename: GE-Southern		Study:	Steady-State Temperature

Summary (RW2)

No.	Cable ID	Conduit/Location ID	Size	Current Amp	Temp. °C
1	6Z-CWS-MFN-01A-100-1C	Cond64	1/0	33.61	60.43
2	6Z-CWS-MFN-01A-100-1B	Cond64	1/0	33.61	60.43
3	6Z-CWS-MFN-01A-100-1A	Cond64	1/0	33.61	60.43
4	6Z-CWS-MFN-01B-100-1C	Cond65	1/0	33.61	57.75
5	6Z-CWS-MFN-01B-100-1B	Cond65	1/0	33.61	57.75
6	6Z-CWS-MFN-01B-100-1A	Cond65	1/0	33.61	57.75
7	6Z-CWS-MFN-01C-100-1C	Cond66	1/0	33.62	55.79
8	6Z-CWS-MFN-01C-100-1B	Cond66	1/0	33.62	55.79
9	6Z-CWS-MFN-01C-100-1A	Cond66	1/0	33.62	55.79
10	6Z-CWS-MFN-01D-100-1C	Cond67	1/0	33.62	54.18
11	6Z-CWS-MFN-01D-100-1B	Cond67	1/0	33.62	54.18
12	6Z-CWS-MFN-01D-100-1A	Cond67	1/0	33.62	54.18
13	6Z-CWS-MFN-01E-100-1C	Cond68	1/0	33.62	52.58
14	6Z-CWS-MFN-01E-100-1B	Cond68	1/0	33.62	52.58
15	6Z-CWS-MFN-01E-100-1A	Cond68	1/0	33.62	52.58
16	6Z-CWS-MFN-01F-100-1C	Cond69	1/0	33.62	51.01
17	6Z-CWS-MFN-01F-100-1B	Cond69	1/0	33.62	51.01
18	6Z-CWS-MFN-01F-100-1A	Cond69	1/0	33.62	51.01
19	6Z-CWS-MFN-01G-100-1C	Cond70	1/0	33.62	49.46
20	6Z-CWS-MFN-01G-100-1B	Cond70	1/0	33.62	49.46
21	6Z-CWS-MFN-01G-100-1A	Cond70	1/0	33.62	49.46
22	6Z-CWS-MFN-01H-100-1C	Cond80	1/0	33.62	50.07
23	6Z-CWS-MFN-01H-100-1B	Cond80	1/0	33.62	50.07
24	6Z-CWS-MFN-01H-100-1A	Cond80	1/0	33.62	50.07
25	6Z-CWS-MFN-01I-100-1C	Cond79	1/0	33.63	51.64
26	6Z-CWS-MFN-01I-100-1B	Cond79	1/0	33.63	51.64
27	6Z-CWS-MFN-01I-100-1A	Cond79	1/0	33.63	51.64
28	6Z-CWS-MFN-01J-100-1C	Cond78	1/0	33.63	53.25
29	6Z-CWS-MFN-01J-100-1B	Cond78	1/0	33.63	53.25
30	6Z-CWS-MFN-01J-100-1A	Cond78	1/0	33.63	53.25
31	6Z-CWS-MPM-01A-100-1A	Cond61	500	196.38	74.07
32	6Z-CWS-MPM-01A-100-1B	Cond61	500	196.38	74.07
33	6Z-CWS-MPM-01A-100-1C	Cond61	500	196.38	74.07
34	6Z-CWS-MPM-01B-100-1A	Cond63	500	196.38	69.59
35	6Z-CWS-MPM-01B-100-1B	Cond63	500	196.38	69.59
36	6Z-CWS-MPM-01B-100-1C	Cond63	500	196.38	69.59

Project:		ETAP		Page:	14
Location:		20.6.0C		Date:	04-12-2023
Contract:				SN:	KIEWITRWN9
Engineer:		Study Case: CD		Revision:	Base
Filename:	GE-Southern			Study:	Steady-State Temperature

Summary (RW2)

No.	Cable ID	Conduit/Location ID	Size	Current Amp	Temp. °C
37	6Z-CWS-MPM-01C-100-1A	Cond71	500	0.00	65.88
38	6Z-CWS-MPM-01C-100-1B	Cond71	500	0.00	65.88
39	6Z-CWS-MPM-01C-100-1C	Cond71	500	0.00	65.88
40	6Z-CWS-MPM-02-100-1C	Cond77	1/0	60.26	57.75
41	6Z-CWS-MPM-02-100-1B	Cond77	1/0	60.26	57.75
42	6Z-CWS-MPM-02-100-1A	Cond77	1/0	60.26	57.75
43	6Z-MVA-SWG-2-100-1A	Cond62	500	267.10	78.56
44	6Z-MVA-SWG-2-100-1B	Cond62	500	267.10	78.56
45	6Z-MVA-SWG-2-100-1C	Cond62	500	267.10	78.56

F Indicates fixed cable size in cable sizing calculations or fixed cable ampacity in uniform ampacity calculation
* Indicates a cable temperature exceeding its limit
# Indicates a cable temperature exceeding its marginal limit

APPENDICES

PROJECT: GE/Southern/Linde Advanced NGCC Integration
JOB NUMBER: 20041223

CALC NO CA-ELE-003

SUBJECT CABLE AMPACITY STUDY

BY N. Mechler **DATE** 4/21/2023 **SHEET REV** A

APPENDIX C

Description	No. of Pages
Plant General Arrangement	1

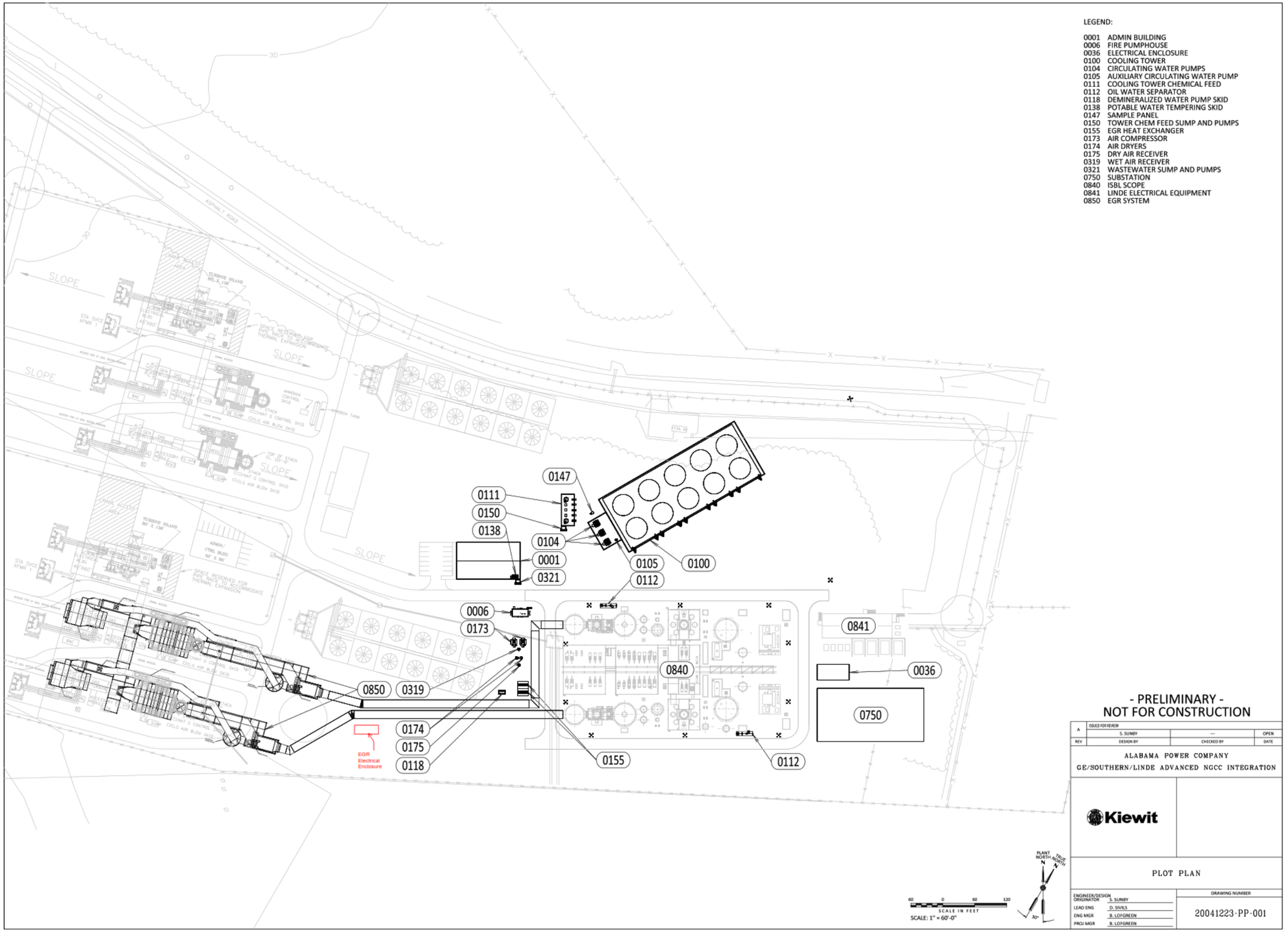
LEGEND:
0001 ADMIN BUILDING
0006 FIRE PUMPHOUSE
0036 ELECTRICAL ENCLOSURE
0100 COOLING TOWER
0104 CIRCULATING WATER PUMPS
0105 AUXILIARY CIRCULATING WATER PUMP
0111 COOLING TOWER CHEMICAL FEED
0112 OIL WATER SEPARATOR
0118 DEMINERALIZED WATER PUMP SKID
0138 POTABLE WATER TEMPERING SKID
0147 SAMPLE PANEL
0150 TOWER CHEM FEED SUMP AND PUMPS
0155 EGR HEAT EXCHANGER
0173 AIR COMPRESSOR
0174 AIR DRYERS
0175 DRY AIR RECEIVER
0319 WET AIR RECEIVER
0321 WASTEWATER SUMP AND PUMPS
0750 SUBSTATION
0840 ISBL SCOPE
0841 LINDE ELECTRICAL EQUIPMENT
0850 EGR SYSTEM
ASPHALT ROAD
SLOPE
EGR Electrical Enclosure
SCALE IN FEET
SCALE: 1" = 60'-0"
PLANT NORTH
TRUE NORTH
- PRELIMINARY -
NOT FOR CONSTRUCTION
ALABAMA POWER COMPANY
GE/SOUTHERN/LINDE ADVANCED NGCC INTEGRATION
Kiewit
PLOT PLAN
ENGINEER/DESIGN ORIGINATOR S. SUNBY
LEAD ENG D. SIVILS
ENG MGR B. LOFGREEN
PROJ MGR B. LOFGREEN
DRAWING NUMBER
20041223-PP-001

APPENDICES

PROJECT: GE/Southern/Linde Advanced NGCC Integration
JOB NUMBER: 2004223

CALC NO CA-ELE-003

SUBJECT CABLE AMPACITY STUDY

BY N. Mechler **DATE** 4/21/2023 **SHEET REV** A

APPENDIX D

Description	No. of Pages
Conceptual Underground Conduit Drawings	1

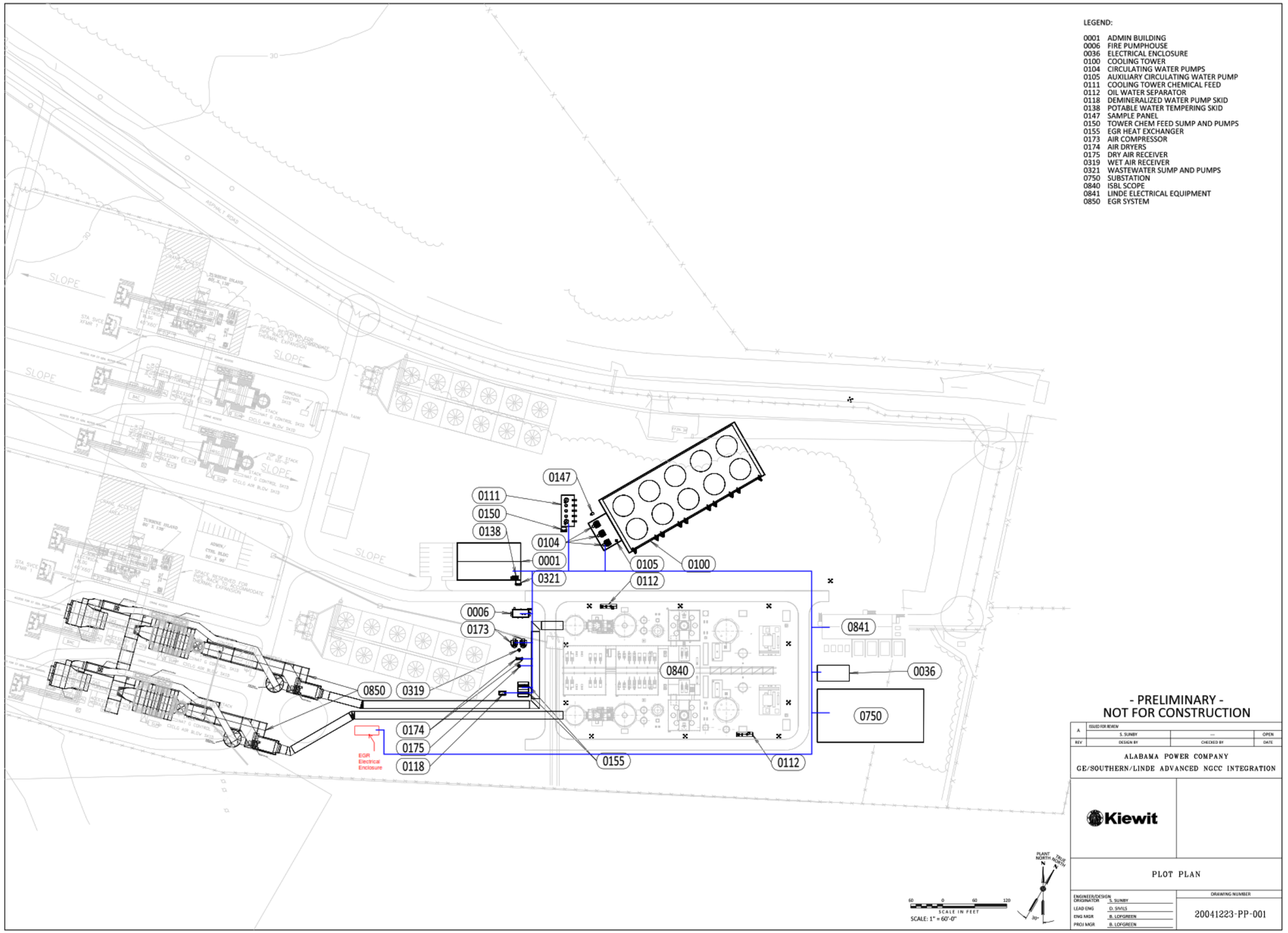
LEGEND:
0001 ADMIN BUILDING
0006 FIRE PUMPHOUSE
0036 ELECTRICAL ENCLOSURE
0100 COOLING TOWER
0104 CIRCULATING WATER PUMPS
0105 AUXILIARY CIRCULATING WATER PUMP
0111 COOLING TOWER CHEMICAL FEED
0112 OIL WATER SEPARATOR
0118 DEMINERALIZED WATER PUMP SKID
0138 POTABLE WATER TEMPERING SKID
0147 SAMPLE PANEL
0150 TOWER CHEM FEED SUMP AND PUMPS
0155 EGR HEAT EXCHANGER
0173 AIR COMPRESSOR
0174 AIR DRYERS
0175 DRY AIR RECEIVER
0319 WET AIR RECEIVER
0321 WASTEWATER SUMP AND PUMPS
0750 SUBSTATION
0840 ISBL SCOPE
0841 LINDE ELECTRICAL EQUIPMENT
0850 EGR SYSTEM
SLOPE
EGR Electrical Enclosure
- PRELIMINARY -
NOT FOR CONSTRUCTION
ALABAMA POWER COMPANY
GE/SOUTHERN/LINDE ADVANCED NGCC INTEGRATION
Kiewit
PLOT PLAN
20041223-PP-001
SCALE: 1" = 60'-0"

APPENDICES

PROJECT: GE/Southern/Linde Advanced NGCC Integration
JOB NUMBER: 20041223

CALC NO CA-ELE-003

SUBJECT CABLE AMPACITY STUDY

BY N. Mechler **DATE** 4/21/2023 **SHEET REV** A

APPENDIX E

Description	No. of Pages
UG Ductbank Cross Sections	1

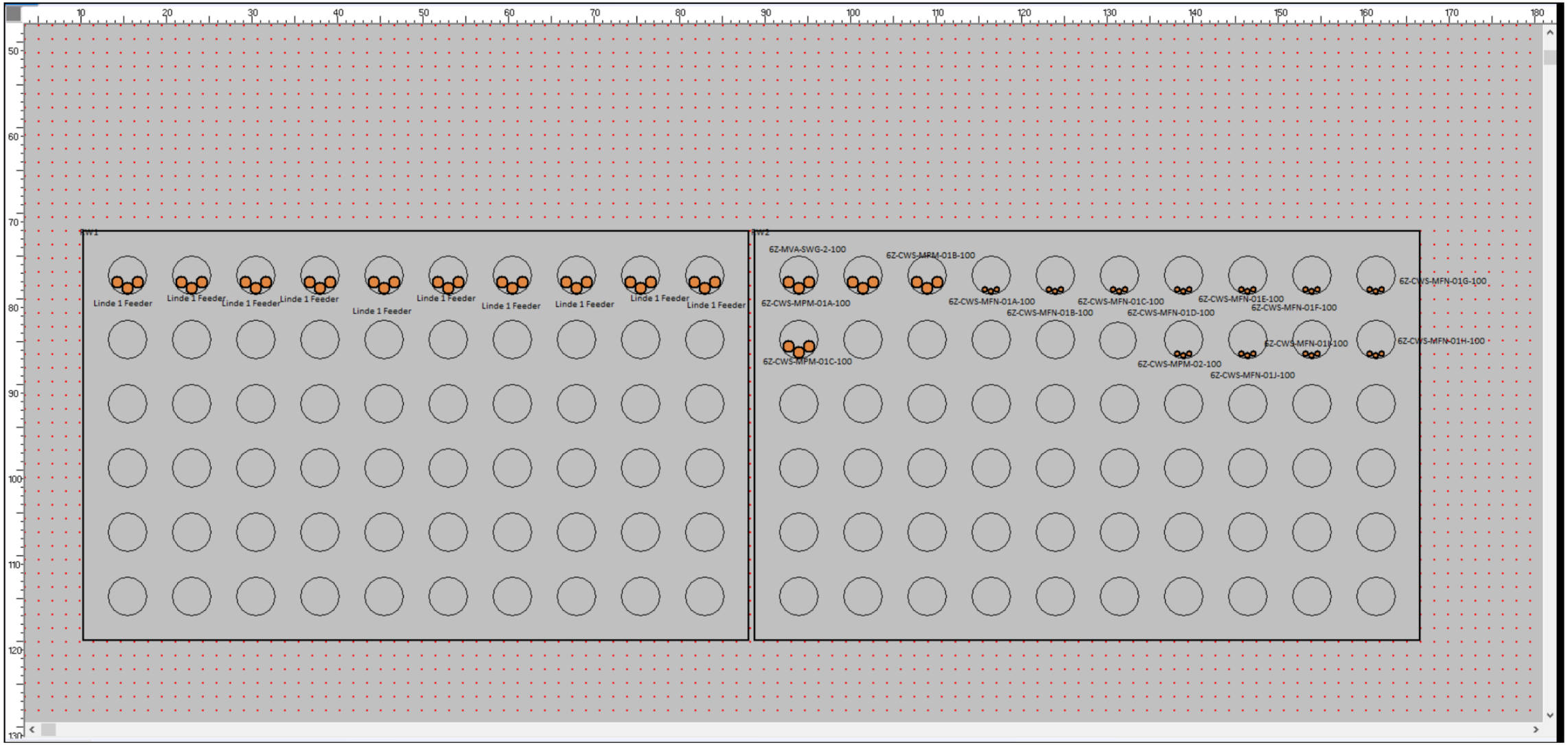
SW1
Linde 1 Feeder
Linde 1 Feeder
Linde 1 Feeder
Linde 1 Feeder
Linde 1 Feeder
Linde 1 Feeder
Linde 1 Feeder
Linde 1 Feeder
Linde 1 Feeder
Linde 1 Feeder
SW2
6Z-MVA-SWG-2-100
6Z-CWS-MPM-01B-100
6Z-CWS-MPM-01A-100
6Z-CWS-MFN-01A-100
6Z-CWS-MFN-01C-100
6Z-CWS-MFN-01E-100
6Z-CWS-MFN-01G-100
6Z-CWS-MFN-01B-100
6Z-CWS-MFN-01D-100
6Z-CWS-MFN-01F-100
6Z-CWS-MFN-01K-100
6Z-CWS-MFN-01H-100
6Z-CWS-MPM-01C-100
6Z-CWS-MPM-02-100
6Z-CWS-MFN-01J-100

APPENDICES

PROJECT: GE/Southern/Linde Advanced NGCC Integration
JOB NUMBER: 20041223

CALC NO CA-ELE-003

SUBJECT CABLE AMPACITY STUDY

BY N. Mechler **DATE** 4/21/2023 **SHEET REV** A

APPENDIX F

Description	No. of Pages
Ambient Design Data	2

Monthly Highest Max Temperature for Mobile Area, AL (ThreadEx)

Year	Jan	Feb	Mar	Apr	May	Jun	Jul	Aug	Sep	Oct	Nov	Dec	Annual
2000	79	81	84	85	92	95	102	105	97	89	85	77	105
2001	71	80	78	89	93	92	95	92	91	85	84	78	95
2002	79	76	82	88	90	94	96	95	95	89	80	75	96
2003	73	79	84	87	91	91	94	94	92	89	87	74	94
2004	78	72	84	85	91	94	97	95	92	90	86	78	97
2005	77	80	85	84	97	95	96	96	97	88	83	79	97
2006	80	80	82	90	95	97	96	97	91	91	80	78	97
2007	77	81	85	86	91	100	96	101	92	91	80	79	101
2008	75	77	81	88	92	95	97	95	92	86	82	78	97
2009	76	77	81	86	91	101	101	95	91	90	78	75	101
2010	75	67	79	85	95	97	98	101	95	91	81	76	101
2011	73	81	86	86	97	103	98	98	92	89	82	78	103
2012	78	76	85	91	97	96	97	94	92	88	83	80	97
2013	80	75	81	84	90	95	93	95	94	88	78	80	95
2014	73	77	79	86	90	93	94	98	93	87	78	77	98
2015	78	78	85	87	90	96	98	96	95	93	86	79	98
2016	74	76	83	86	93	97	97	95	95	89	88	80	97
2017	80	83	88	88	89	91	96	96	93	92	83	80	96
2018	72	82	82	84	97	95	96	94	96	91	84	81	97
2019	75	80	83	87	96	97	100	98	100	98	81	79	100
2020	78	78	87	90	90	92	95	94	95	90	83	76	95
2021	75	80	82	84	88	94	95	96	93	88	79	82	96
2022	79	82	82	87	93	102	95	97	97	90	88	85	102
2023	82	M	M	M	M	M	M	M	M	M	M	M	82
Mean	77	78	83	87	93	96	97	96	94	90	83	78	97
Max	82 2023	83 2017	88 2017	91 2012	97 2018	103 2011	102 2000	105 2000	100 2019	98 2019	88 2022	85 2022	105 2000
Min	71 2001	67 2010	78 2001	84 2021	88 2021	91 2017	93 2013	92 2001	91 2009	85 2001	78 2014	74 2003	82 2023

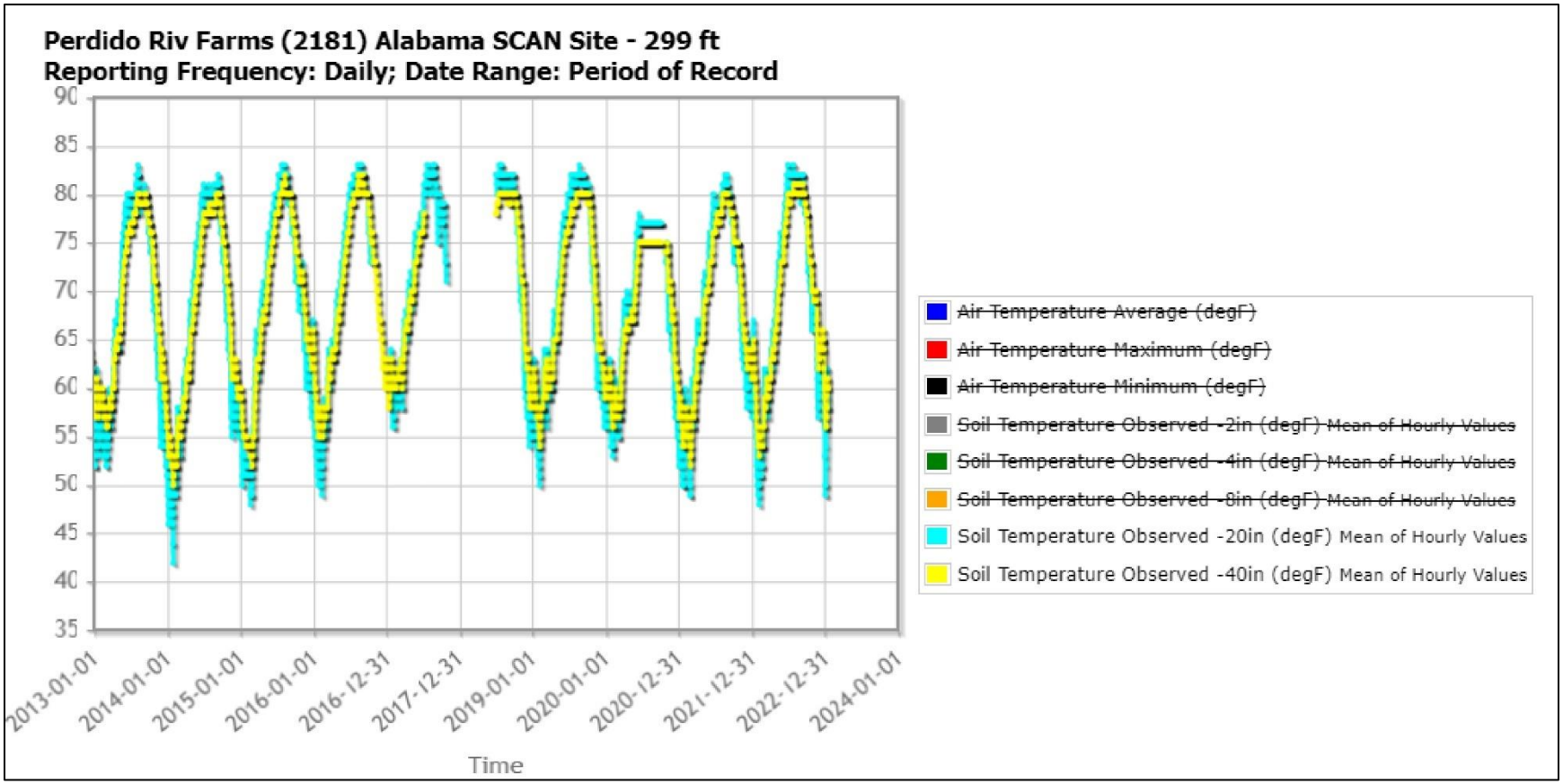
Perdido Riv Farms (2181) Alabama SCAN Site - 299 ft
Reporting Frequency: Daily; Date Range: Period of Record
90
85
80
75
70
65
60
55
50
45
40
35
2013-01-01
2014-01-01
2015-01-01
2016-01-01
2016-12-31
2017-12-31
2019-01-01
2020-01-01
2020-12-31
2021-12-31
2022-12-31
2024-01-01
Time
Air Temperature Average (degF)
Air Temperature Maximum (degF)
Air Temperature Minimum (degF)
Soil Temperature Observed -2in (degF) Mean of Hourly Values
Soil Temperature Observed -4in (degF) Mean of Hourly Values
Soil Temperature Observed -8in (degF) Mean of Hourly Values
Soil Temperature Observed -20in (degF) Mean of Hourly Values
Soil Temperature Observed -40in (degF) Mean of Hourly Values

Appendix AA

OSBL Mechanical Design Criteria

Kiewit

MECHANICAL DESIGN CRITERIA
20041223-MDC-001

RETROFITTABLE ADVANCED COMBINED CYCLE INTEGRATION FOR FLEXIBLE DECARBONIZED GENERATION
DE-FE-0032131

KIEWIT PROJECT NO. 20041223

ISSUED: MARCH 22, 2023

REVISION 0 – ISSUED FOR FEED

MECHANICAL DESIGN CRITERIA (MDC)

1. SCOPE: This document serves to define the design criteria for the mechanical systems for the project. This document does not define the design requirements for the plumbing or HVAC design requirements of buildings at the facility. This document is intended to function as a project-specific guideline.

2. DESIGN CODES, STANDARDS, LAWS AND ORDINANCES: At a minimum, all mechanical systems shall be designed in accordance with the requirements or recommendations contained in the following Codes and Standards as applicable to the mechanical system design. Refer to the Project Contract for plant design requirements.

2.1 Governing Codes, Standards, Regulations and other Documents: Design specifications and construction of the Project shall be in accordance with applicable laws, regulations, codes and standards of the Federal Government, state of project location, local codes and general industry standards including, but not limited to, those set forth in Section 1B.

2.2 Industry Codes Specified: In the event conflicts arise between codes, standards of practice, specifications or manufacturer recommendations described herein and codes, laws, rules, decrees, regulations, and standards of the locality where the equipment is to be installed, the more stringent code shall apply.

2.2.1 In the case of fire codes, the recommended practices of NFPA 850 will be generally utilized. See the Fire Protection Design Basis Document for any exceptions. Additionally, all fire protection design will require final approval by the local Fire Chief and/or Authority Having Jurisdiction (AHJ).

2.3 Site Utilities and Ambient Conditions: The project site conditions, including available onsite utilities, such as compressed air and cooling water, can be found in Section 1B.

3. FIRE PROTECTION: Mechanical design shall follow the Fire Protection Design Basis document.

4. EQUIPMENT ARRANGEMENT AND ACCESS: Provide safe and convenient access to equipment including valves, instruments and controls as necessary for operation and maintenance.

5. PLANT NOISE: Plant Noise Requirements are located in Section 1B.

6. UNITS OF MEASURE: Correspondence, technical schedules, drawings and instrument data shall use the units of measurement below.

	ENGLISH	
Distance-Long	foot	ft
Distance-Short	inch	in
Weight (mass)	pound	lb
Temperature	Fahrenheit	°F
Pressure (pipe)	lb/in^2-atm, lb/in^2-gauge	Psia, psig
Pressure (structural)	lb/ft^2	psf
Velocity	ft/sec	fps
Fluid Flow (volume)	cu. ft/min	cfm
	gal/min	gpm
Fluid Flow (mass)	lb/hr	pph
Heat (HVAC)	British Thermal Unit	BTU
Power (thermal)	Btu/hour	BTU/hr
Power (electrical)	Horsepower	HP

7. CONTAINMENT: All volumes of oil or heavy hydrocarbons that contain 55 gallons or more require secondary containment (40CFR112). Chemicals residing in the same containment should be checked for compatibility. Work alongside the Containment, Drains, and Discharge Responsible Engineer when designing containment areas.

8. FACILITY PIPING REQUIREMENTS:

8.1 Schedule/nominal wall thickness pipe shall be used unless the service conditions exceed heaviest schedule pipe limitations. Threaded pipe shall be Schedule 80 minimum.

8.2 In the usage of this document, the term "alloy steel" shall be synonymous with "low or intermediate alloy steel" which are steel alloys with chromium content between 1.25% and 9% (P11, P22, P91). Per ASME, stainless steel is not considered to fall into the common terminology of "alloy steel" in the context of welding procedures, PWHT, PMI, etc. Refer to ASME B31.1, Table A-2 for a complete list of low or intermediate alloy steel.

8.3 Material allowance on pipe wall thickness shall be as follows:

a. Carbon & Low/Intermediate Alloy Steels – 0.020"
b. Creep Strength Enhanced Ferritic (CSEF) Steels – 0.060"
c. Stainless Steels and Nickel Alloys – 0.000"

8.4 Pipe Sizing: Pipe sizes shall be selected primarily on the basis of velocity, allowable pressure drop for the service, and good engineering practice. The following fluid velocity ranges shall be used as a guideline for pipe size selection. For pipe sizes between tabulated values, the velocity associated with the larger pipe size may be used. Non-standard pipe sizes are to be avoided. Non-standard pipe sizes include 1-1/4", 3-1/2" 5", and 22". Exceptions include fire protection and potable water applications where use of 1-1/4" is common practice.

	Nominal Pipe Size				
Service Fluid	2"	8"	14"	20"	24" and Up
Superheated Steam					
Subcritical (Up to 2400 psig, 1000 F)					
Continuous Service (ft/min)	7,000	12,000	14,000	15,000	15,000
Intermittent Service (ft/min)	9,000	15,000	18,000	22,000	22,500
Saturated Steam (ft/min)	3,000	6,000	7,000	9,000	10,000
Subatmospheric Steam (ft/min)	--	2,000	2,500	3,000	3,000
All Gases (ft/min)	3,000	4,000	5,000	5,000	5,000
Flue Gas (ft/sec)	60 (Ductwork)				
Circulating Water					
Pump Suction (ft/sec)	2	4	6	6	6
Pump Discharge (ft/sec)	4	8	10	15	15
Condensate					
Pump Suction (ft/sec)	2	5	5	5	5
Pump Discharge (ft/sec)	5	10	12	15	15
General Service Water					
Pump Suction (ft/sec)	2	5	6	8	10
Pump Discharge (ft/sec)	5	10	12	15	15
Closed Cooling Water (ft/sec)	5	10	12	15	15
Gravity Drains (ft/sec)	3	4	5	8	12
Fire Protection System					
Pump Suction/Recirc (ft/sec)	15				
Underground Loop (ft/sec)	20				

8.5 Pipe Slope Requirements: Below are the general sloping requirements for the project.

8.5.1 Steam system drip leg drains should be sloped at a minimum of 1/8" per ft in the direction of flow where practical. Drain pots shall be sized to provide condensate storage required for startup or shall incorporate low point drains that can be opened during startup. Continuous sloping of steam drains is not required.

8.5.2 Steam headers may be level or sloped in the direction of flow.

8.5.3 Gravity drain systems shall be sloped at a minimum of 1/8" per ft in the direction of flow, or according to local plumbing code requirements, whichever is more stringent.

8.6 Pipe Stress Analysis and Support: Piping systems shall be supported, anchored and guided, so they shall not be over stressed from operating or transient conditions and shall not react on equipment beyond limits established by the manufacturers. The pipe stress analysis shall be performed in accordance with the requirements set forth in ASME/ANSI B31.1 or B31.3, as appropriate.

8.6.1 All large bore piping with a design temperature of 300°F or greater shall be subjected to computer piping analysis. Hot small bore lines (300°F or greater) may be subjected to computer piping analysis as well. A pipe stress analysis should also be performed on any cold pipe that connects to hot pipe (such as condensate spray connections to steam bypass valves). Consideration should also be given to cold piping that connects to equipment with nozzles that are sensitive to pipe loads. The Lead Mechanical Engineer should determine which equipment nozzles connected to cold piping require stress analysis, as well as any other cold large bore pipe. Other pipe stress analysis methods may be used for analyzing other piping systems.

8.6.2 Engineering is solely responsible for ensuring design loads on the equipment connections do not exceed manufacturer specific allowable loads. Even if equipment vendors do not provide allowable loads, vendors are contractually obligated to meet the minimum allowable resultant force at each equipment nozzle which shall be 250 lbs per nominal pipe size (NPS), and the minimum allowable resultant moment at each equipment nozzle shall be 500 ft-lbs per NPS. For instance, a 4-inch nozzle shall be designed for minimum 1,000 lbs resultant force and 2,000 ft-lbs resultant moment.

8.6.3 Supports shall be either suspension type or low friction sliding type. Anchors and restraints shall be provided at locations to control the magnitude and direction of movement of the pipe during expansion/contraction.

8.7 Pipe Sleeves: All pipes passing through walls and floors shall have sleeves provided. Sleeves shall be sized and have clearances to allow for packing, sealant installation, and thermal movement as required. Pipe boots shall be used at locations where pipe movement occurs. Where penetrations are in walls or floors designed for fire separation, special sealants and packings designed specifically for the application and to meet the fire separation requirements as required by the applicable NFPA codes shall be used. Fire-stopping materials shall be in accordance with applicable ASTM or UL standards.

8.8 Dissimilar Metal Joints: When a piping connection is made between two dissimilar metallic materials in water systems, the mating surfaces shall be electrically isolated. For 2-1/2" and larger piping, flanges shall be used, and the flanged joint shall be made using an electrically non-conducting gasket and flange bolts fitted with non-metallic ferrules and washers under the bolt heads. The electrical isolation shall be verified after installation. Flange connections (as stated above) are the preferred method for piping 2" and smaller, although dielectric-type couplings, bushing, or unions may be utilized if necessary.

8.8.1 Electrically isolated joints shall also be utilized at all points where any above ground metallic piping meets any metallic piping which penetrates below grade.

8.9 Sewers and Underground Piping: Vessels and equipment drains shall interconnect with the plant drainage system and not the storm system. Sewers and drain lines shall run in the general direction of collection or disposal without sharp angle or turns. The minimum size of underground gravity drain lines shall be 4 inches.

8.10 Vents and Drains: High points shall be vented, and low points drained to ensure quick and efficient start up, operation, and maintenance of all mechanical systems.

8.10.1 Drains from skid-mounted equipment shall generally go directly to equipment drains without piping or effluent running across the floor.

8.10.2 The minimum drain line size for non-skidded, balance-of-plant piping shall be ¾ inch.

8.10.3 A threaded nipple and half-coupling shall be provided at the discharge end of vent and drain valves.

8.11 Sample and Test Connections: Sample and test connections together with coolers (where applicable) shall be provided according to the Contract, or as required to safely and efficiently commission, monitor and operate the facility.

8.11.1 Branch Connections: Intersections and branch connections may be made using direct pipe insertion (branch to run), or by employing fittings, tees, couplings, laterals, crosses, or using fittings, nozzles, sock-o-lets, weld-o-lets, elbow-lets, etc.

8.11.2 Surface Cleaning: See Specification General Requirements Section P1 – Shop Applied Coatings for requirements on interior and exterior surface cleaning.

8.11.3 Welding: Welded connections will primarily be used on systems with ASME B16.5 flange class ratings over CL300. Flange connections will be used on CL300 and lower systems and where frequent removal of an equipment item or a valve is anticipated. Welding connections 2 inches or smaller shall be socket-welded connections.

8.11.4 No socket welds shall be allowed on lube oil piping. Lube oil piping shall be joined by butt welding.

8.12 Design Pressure and Temperature: The following applies to all non-skidded, balance-of-plant interconnecting piping provided for the project.

Design Pressure	
HP Steam	Lowest boiler superheater outlet safety valve set pressure (or assume maximum heat balance condition *1.10 until set pressure is known)
LP Steam	Lowest boiler superheater outlet safety valve set pressure (or assume maximum heat balance condition *1.10 until set pressure is known)
Extraction Piping	Maximum heat balance condition with upstream extractions out of service
System Pressurized by Pumps	Submitted pump curve shutoff head, plus maximum suction pressure (including static head) at the pump suction connection. For variable speed pumps, the shutoff head corresponding to the 100% pump speed shall be used. In the absence of a pump curve, a rise to shutoff of 140%, from the design point, can be assumed. An assumption shall be added to calculation that shall be verified prior to system IFC. Note that suction piping must either have same design pressure as discharge pipe or be equipped with overpressure protection (relief valve), in the case that pump discharge line becomes blocked and suction line is pressurized by pump.
All Other Systems	Steam/Gas: Maximum sustained operating conditions (MSOP) plus 25 psi or MSOP plus 10%, whichever is greater. Liquids: Maximum sustained operating conditions (MSOP) plus 10 psi, rounded to next 10 psi, with the following below exception:
	The design pressure of piping systems with operating pressures of less than 6 psig shall have a design pressure of 15 psig. The design pressure of piping systems with operating pressures of 6 psig and greater shall be a minimum of 50 psig. Gravity drain lines at atmospheric pressure may have a design pressure of 0 psig.
Any System Exposed to Vacuum	The above design pressure criteria and full vacuum or maximum vacuum condition allowed by vacuum relief valves

Design Temperature	
Steam Systems (HP & LP)	HRSG/Auxiliary Boiler Manufacturer's superheater outlet design temperature.
All Other Systems	Maximum sustained operating condition (internal or external) plus 10°F, rounded to next 5°F.

8.13 Miscellaneous Branch and Instrument Connections: The following branch, pipe tap, and instrument connection sizes shall be used on the main line and through the root/isolation valve for all systems.

8.13.1 See the Mechanical Detail (MD) drawings for specific size and dimensional details associated with temperature elements beyond the information found below.

8.13.2 FRP Ductwork: Design conditions shall be per NFPA 85. Construction shall be per RTP-1.

8.13.3 Carbon Steel Ductwork: Design conditions shall be per ASTM A36, A992, A572, A588, and / or A242. The duct shall be uncoated carbon steel due to the exhaust gas temperature being greater than 20 °F over the acid dew point temperature.

Branch and Instrument Connections		
System	**Service**	**Tap Size/Type**
Main Steam Systems	Temperature Conns.	weld-in (surface mounted thermocouple is acceptable where weld-in is not practical)
Auxiliary Steam, Boiler Feedwater, Hydrogen, Fuel Gas	Temperature Conns.	socket welded (elbolet/sockolet)
Circulating Water	Temperature Conns.	threaded or flanged
All Other Systems	Vents, Drains, Test Conns.	¾ inch NPS, socket weld
	Pressure Conns.	¾ inch NPS, socket weld
	Temperature Conns.	threaded (elbolet/threadolets)
	Level Switch Conns.	1-inch NPS, socket weld
	Tank Thermowell Conns.	2 inch, flanged
	Tank Level Transmitter Conns.	2 inch, flanged
	Sample Conns.	¾ inch NPS, socket weld or per manufacturer's recommendation.
	Orifice Flange Conns.	Per ASME B16.36
	Flow Nozzle Conns.	¾ inch NPS, socket weld, hole drilled in pipe to be ½ inch or per manufacturer's recommendation.
	Chemical Injection	Size sufficient for injection quill insertion, threaded or manufacturer's recommendation

8.14 Flanges and Gaskets: Refer to Pipe Specifications for flange and gasket information. Some chemical and glycol systems may require the use of different gasket materials.

8.15 Flanges up to 24 inch shall be per ASME B16.5. Flanges 26 inch and above shall be per ASME B16.47

8.16 Studs, Bolts, Nuts: Studs, bolts, and nuts shall be per Pipe Specification Sheets, and Technical Specification – Piping – Mechanical Construction.

8.17 Cathodic Protection: Cathodic protection and other corrosion control measures shall be provided to protect underground metal piping, vessels, and metallic equipment in contact with the earth. Cathodic protection and coatings shall be recommended by a Corrosion Engineer after reviewing the Geotechnical data for the site and shall be as agreed upon between the Engineer and the Owner.

8.18 Inspection and Testing: Inspection and testing practices shall follow the guidelines below. Pressure testing of piping systems including hydrostatic, pneumatic, or initial service test (IST) shall be performed on systems following completion of erection. Shop leak testing of field erected piping will not be required. All underground piping shall be tested prior to covering the field joints, except for large circulating water systems, which may use internal visual test methods or testable joints and may be buried before such verification.

Inspection and Testing	
Systems	**Test Method**
Compressed gas, hydraulic oil, seal oil, lube oil, ammonia, nitrogen, chemical feed	Pneumatic (air/nitrogen) test at 1.2 times design pressure (special safety procedures apply).
Fuel gas	Pneumatic (nitrogen) test at 1.2 times design pressure (special safety procedures apply). Verify per combustion turbine and/or auxiliary boiler supplier's recommendations and acceptance criteria.
Aboveground drains (all systems); Aboveground low pressure, low temperature systems (ANSI Class 150, 200 F or less) (including; PW, UW, DMW, CCF, TCF, SMP, IA, CWS, BS) All instrument tubing, vents, temporary piping systems, and all piping for which valve isolation or blanking is not practical (piping terminal flanges shall not be separated for testing)	Initial Service Test
Above ground high pressure, high temperature systems. (SM, SC, BFW, BD) Underground pressurized systems	Hydrostatic test at 1.5 times design pressure with clean water at not more than 100°F (water chemically treated as required); in no case to exceed limitations of B31.1 Section 137.
Underground drains (Waste Drains, Plant Drains, Sanitary Drains)	Head test – fill piping with clean water at no more than 100° F, water will not be pressurized.
Fire Protection	Hydrostatic test to 200 psi, or 50 psi in excess of the maximum pressure to be maintained in the system, whichever is greater

8.18.1 Nondestructive testing of piping shall be performed in accordance with applicable codes.

8.19 Piping Materials shall be as outlined in the table below.

System	Pipe Material
Ammonia AG	ASTM A312 TP304/304L EFW Stainless Steel
Ammonia UG	HDPE ASTM D3035 PE4710
Boiler Feed	Carbon Steel ASTM A106 Grade B (Seamless)
Circulating Water/Cooling Tower Blowdown AG	• AWWA C200 lined Carbon Steel for pipe 26" and larger • ASTM A53 Gr B ERW Carbon Steel, AWWA C200 Lined Carbon Steel or FRP, depending on water quality, for pipe 4" to 24" • ASTM A312 TP 304/304L Seamless Stainless Steel or FRP, depending on water quality, for pipe < 4"
Circulating Water/Cooling Tower Blowdown UG	• AWWA C301 Prestressed Concrete for pipe 26" and larger • ASTM D3035 PE4710 HDPE for pipe smaller than 26"
Condensate	Carbon Steel ASTM A106 Grade B (Seamless)
Demineralized Water AG	ASTM A312 TP304/304L EFW Stainless Steel
Demineralized Water UG	ASTM D3035 PE4710 HDPE (<140F) ASTM A312 TP304/304L ERW Stainless Steel (>140F)
Drains	ASTM D3035 PE4710 HDPE or A536 Gr. 60-42-10 Ductile Iron or Carbon Steel ASTM A106 Grade B
Fire Water UG	ASTM D3035 PE4710 HDPE
Fuel Gas	Carbon Steel ASTM A106 Grade B
Instrument Air AG	ASTM A312 Gr B EFW Stainless Steel (Press Fit Piping)
Instrument Air UG	HDPE ASTM D3035 PE100 Asahi Air-Pro or equivalent
High Pressure Steam	9Cr-1Mo-V ASTM A335 Gr. P91 Type 1
Low Pressure Steam	Carbon Steel ASTM A106 Grade B (Seamless)
Potable Water AG	ASTM A312 TP304/304L EFW Stainless Steel
Potable Water UG	ASTM D3035 PE4710 HDPE
TEG Wastewater	Carbon Steel ASTM A106 Grade B
Utility Water AG	Carbon Steel ASTM A106 Grade B
Utility Water UG	Carbon Steel ASTM A106 Grade B or ASTM A53 Gr. B ERW or ASTM D3035 PE4710 HDPE

9. FACILITY VALVE REQUIREMENTS: Valves shall be provided which are compatible with the materials of the piping systems to which they are applied. Valve pressure and temperature ratings shall meet or exceed the system design conditions, including hydrostatic test conditions. Block valves shall generally be capable of withstanding hydrostatic test pressure

from either direction with the valve in the closed position. In general, valves above CL600 shall be welded (large bore) or socket-welded (small bore). Bonnet overpressure protection will be provided as required.

9.1 **Valve Selection by Service**

Water, and Steam Service – ASME CL150 and less:

Size, Inch	Isolation	Throttling	Vent	Instrument	Drain
2 & smaller	Gate, Ball	Globe	Globe, Ball	Globe, Ball	Gate, Ball
2 1/2 & larger	Butterfly, Gate, Ball	Globe, Butterfly	N/A	N/A	N/A

Water Service – ASME CL300 and above:

Size, Inch	Isolation	Throttling	Vent	Instrument	Drain
2 & smaller	Gate, Globe, Ball	Globe	Globe, Ball	Globe, Ball	Gate, Ball
2 1/2 & larger	Gate, Ball	Globe	N/A	N/A	N/A

Steam Service – ASME CL300 to CL600:

Size, Inch	Isolation	Throttling	Vent	Instrument	Drain
2 & smaller	Gate, Globe, Ball	Globe	Globe	Globe	Gate
2 1/2 & larger	Parallel Slide Gate or flexible wedge	Globe	N/A	N/A	N/A

Steam Service – ASME CL900 or greater:

Size, Inch	Isolation	Throttling	Vent	Instrument	Drain
2 & smaller	Gate, Globe, Ball	Globe	Globe	Globe	Gate
2 1/2 & larger	Parallel Slide Gate	Globe	N/A	N/A	N/A

9.1.1 Steam system drains shall utilize steam traps. Check valve shall be included if steam trap does not include a check function.

9.1.2 Butterfly valves for steam systems shall be high performance butterfly valves.

9.2 Isolation Valves: Isolation valves shall be provided on all piping connections to equipment, unless a valve is provided with the equipment. Isolation valves for pump suctions and discharges shall be located in the larger piping section and are used when isolating and servicing the equipment. Isolation valves shall be provided on all above ground to below ground interface points. Isolation valves shall be provided before the inlet of all underground tanks and oil water separators. The above ground to below ground and underground tank isolation valves facilitate system testing and commissioning. When using flexible hoses or non-metallic expansion joints,

ensure isolation valves are provided such that a leak or rupture will not result in excess fluid loss or system shutdown.

9.3 Double Valving Criteria: All vent and drain piping and instruments rated ASME Class 900 or greater shall utilize double isolation valves. For pipes that carry a volatile medium such as fuel gas or hydrogen, double isolation and bleed is required for the main process lines to provide a barrier for maintenance of equipment, regardless of pressure class. Also, double isolation is to be provided for all volatile medium system vents and drains, regardless of pressure class, to avoid potential leak points to atmosphere.

10. FACILITY PUMP REQUIREMENTS: The pumps shall be designed in accordance with the Hydraulics Institute Standards where applicable.

10.1 Pump Margin Requirements: As a minimum, 10% margin on friction head and 5% margin on flow shall be applied concurrently (additively) to the calculated design conditions. Exceptions apply to Circulating Water Pumps and pumps with the potential to be adversely affected by substantial unforeseen changes in preliminary pipe routing. Friction head margin shall be distributed to the piping losses, flow element losses, nozzle losses, and vendor supplied equipment losses along the pipe between the source and destination users. Margin shall not be applied to control valve losses.

10.2 Circulating Water Pump Margin Requirements: As a minimum, 3% margin on friction head and 1.5% margin on flow shall be applied concurrently (additively) to the calculated design conditions. Friction head margin shall be distributed to the piping losses, flow element losses, nozzle losses, and vendor supplied equipment losses along the pipe between the source and destination users.

10.3 Installed spare pump shall be included for process pumps in continuous operation. Spare pump in stock for intermittently operated pumps.

11. INSULATION AND LAGGING: Engineering shall specify insulation and lagging for piping, gas ducts, tanks and equipment to reduce system heat losses, provide personnel protection, prevent condensation, and prevent freezing as required for the specific application.

11.1 Anti-sweat insulation shall be designed on the basis of the relative humidity of the ambient air considering the fluid temperature within the system. Anti-sweat insulation shall be provided only where piping runs above the ceiling, or in finished indoor areas.

12. CONTAINMENT DESIGN

12.1 Secondary containment volume for hazardous chemical storage = Largest Vessel Volume + 24 hours rainfall (6.26 inches) + 6 inches of freeboard

END OF SECTION

Appendix BB

OSBL Electrical Design Criteria

Kiewit

ELECTRICAL DESIGN CRITERIA

GE / SOUTHERN / LINDE ADVANCED NGCC

KIEWIT PROJECT NO. 20041223

ISSUED: FEBRUARY 27, 2023

REVISION 0 – ISSUED FOR FEED

ELECTRICAL DESIGN CRITERIA (EDC)

1. SCOPE: This document establishes the guidelines for the engineering and design work required for the electrical discipline for the primary electrical equipment and systems that will comprise the project. It describes the equipment functions and the criteria upon which the design will be based. The general descriptions and criteria herein and are not intended to supplement good engineering practice. The design engineer shall determine application of the design criteria to any given situation and shall determine the best approach. The Project Contract shall be consulted and will govern in cases of conflict with this document

1.1. This document combines typical design practices for each major piece of electrical equipment, system, study or calculation, and Project Contract requirements. All detailed electrical design for the subcontractor supplied equipment packages shall be supplied by the respective supplier and shall not be replicated on Kiewit drawing or schedules. Kiewit drawings will include references to all interface points on vendor drawings.

1.2. This document does not address the project schedule.

1.3. All equipment specified and work performed on the project will comply with the codes, standards, and specifications listed in the Project Contract.

2. DESIGN CODES, STANDARDS, LAWS AND ORDINANCES: The design for this project shall be in accordance with all applicable laws and regulations of the federal government, the state of Alabama, and all local codes, ordinances, General Industry Standards including, but not limited to, those set forth in Specification General Requirements Section GR-A – General Description and Scope of Work.

2.1. All equipment specified, and work performed on this project will comply with the latest edition at the time of the contract's execution and published addenda of the codes, standards, regulations, and tests. Kiewit's specifications will include the codes, standards, regulations, and tests, which are appropriate to specific applications.

2.2. In the case of fire codes, the recommended practices of NFPA 850 will be utilized, except where the manufacturer's standards shall apply. Additionally, all fire protection design will require final approval by the local Fire Chief and/or Authority Having Jurisdiction (AHJ).

3. ELECTRICAL STUDIES: All electrical studies require electrical engineering software packages (ETAP, MathCAD, etc.) unless noted otherwise herein. The list below includes electrical studies and calculations per Kiewit standards and contract specific requirements for this project.

3.1. Load flow, Motor Acceleration (Static), and short circuit study to identify:

a. The load flow analysis study will be performed to evaluate the system capability to withstand against over voltage, under voltage and overloading situations and to determine the right size of equipment ratings, cable sizing, and transformer impedance and taps.

b. The motor starting analysis will be performed to check the system impact when starting large direct online motors, which can cause under voltage at motor, switchgear and MCC buses.

c. The short circuit analysis will be performed to evaluate the maximum and minimum available short circuit current at circuit breakers, switchgear and MCC buses.

3.2. Battery, charger and UPS sizing based on essential loads required for safe plant shutdown.

4. The GE/Southern/Linde Advanced NGCC Integration is a carbon capture project located at the Barry Combined Cycle Generation Plant in Bucks, Alabama. The project will consist of two independent trains to provide carbon capture functionality.

4.1. Utility and Site Information:

a. Nominal incoming Yard voltage is 230kV. Based on grid operator information, "Minimum" and "Maximum" design basis are as follows:

i. Minimum yard voltage: 235kV

ii. Maximum yard voltage: 240kV

b. Nominal short-circuit current available

i. Three-phase: 50 kA, X/R = 29

ii. Line-to-ground: 52 kA, X/R = 20

iii. Substation fault clearing time: 3 Cycles (1 cycle relay time + 2 cycle breaker operating time)

iv. Soil data including resistivity and test elevations are noted in the soil analysis.

c. Temperatures

i. Average Ambient: 67.7 °F

ii. Maximum daily average design ambient: 105 °F

iii. Minimum daily average design ambient: 0 °F

5. SYSTEM DESIGN: The project will consist of a single electrical enclosure containing all relevant switchgear and motor control centers for the project. This enclosure shall include air insulated switchgear distributing power from the secondary of the site main power transformer.

a. Medium/Low Voltage Switchgear
b. Medium/Low Voltage Motor Control Centers
c. Battery/Battery racks
d. Battery Chargers
e. UPS
f. DCS cabinets
g. Panel boards for 480VAC, 208/120VAC, 120VAC UPS and 125VDC power distribution
h. Network Cabinets
i. All accessories and connections as required by the Project Contract and standard design practices for a complete unit.

5.2. Medium Voltage System:

5.2.1. The MV systems (13.8kV and 4.16kV) will be low resistance grounded and designed to feed motors greater than 200hp and Secondary Unit Substations (SUS) transformers. The 13.8kV switchgear will be air insulated, located in the electrical enclosure, and consist of two independent buses. The 4.16kV switchgear shall be located in the project electrical enclosure and be designed as a main-tie-main configuration.

5.2.2. Spares: The 4.16kV MV switchgear shall include one (1) spare breaker per lineup. The 13.8kV switchgear shall not include any spare breakers.

5.2.3. Each breaker will be capable of interrupting the maximum available fault current. This maximum available fault current will be determined by the system analysis described in this document. The MV switchgear will contain the main breaker and feeder breakers to transformers and motors greater than or equal to 1500hp. The MV switchgear/MCC will contain starters to feed motors greater than 200hp. The MV switchgear/MCC will be vendor standard metal clad, with standard manufacturer equipment and accessories.

5.3. Low Voltage System:

5.3.1. The low voltage systems will be comprised of switchgear, motor control centers, MV-LV SUS(s), panelboards, batteries, battery chargers, and UPS. Power distribution voltages of this system will be from 120VAC up to 480VAC. The LV 480V system will be connected to a high resistance ground (HRG) at the secondary of each SUS transformer. The HRG will serve to limit ground fault current on the 3-phase 3-wire system. An alarm to the control room will be furnished when a ground fault is detected.

5.3.2. The LV switchgear will be either a double-ended main-tie-main configuration or a single-ended lineup with no tie breaker. All switchgear ratings will be confirmed through the system analysis studies. The main and tie circuit breakers contained in the LV switchgear will be

electrically operated. The system design will allow for operator-initiated transfers and may be closed or open transition. There are no plans for an automatic transfer upon loss of power to one bus. The LV switchgear will be vendor-standard metal clad, with standard manufacturer equipment and accessories.

5.3.3. Maintenance switches and indicating lights will be furnished at the main breaker. The function of this switch will be to disable standard relay coordination on the upstream feeder and reduce the arc flash effects. Whenever work is to be performed on the LV switchgear main breaker, the individual will be expected to activate the switch.

5.3.4. Spares: All 120/208V and 480V panelboards shall include 10% installed spare circuit breakers. 480V switchgear shall include one (1) installed spare circuit breaker per switchgear lineup and each 480V MCC shall include one (1) size 1 FVNR, one (1) size 2 FVNR, one (1) size 3 FVNR, and two (2) 150 A frame thermal magnetic circuit breakers.

5.4. Uninterruptible Power Supply and DC Systems:

5.4.1. Uninterruptible Power Supply (UPS) and DC systems will be provided to power essential instrumentation, control and monitoring circuits required for startup, operation, normal and emergency shutdown, and offline housekeeping of the new equipment. The plant UPS will operate at 120VAC and provide filtered and regulated power via an inverter with inputs from the LV and DC systems respectively. The UPS system shall be comprised of the inverter, static and bypass switches, a voltage regulating transformer, and panelboards as required.

5.4.2. The DC system will be composed of the plant battery and associated chargers and panels. The plant battery will operate at 125VDC and will supply the UPS and other plant DC loads as required.

6. STUDIES, CALCULATIONS, AND GUIDELINES:

6.1. Redundancy and Spare Capacity: In general, redundant loads, such as 2x100% pump motors or primary and alternate power feeds, will be split between A and B busses. Loads that are complimentary, such as 2x50% or 3x50% pump motors, will also be split between A and B busses. Control power for the loads on the A bus will come from a power source on the A bus, and likewise for loads on the B bus unless uninterruptible power supply (UPS) power is required by the Project Contract. In areas where separate buses are not available or are not practical, the power supplies will be from separate breakers in the same supply equipment. For power needs that are not integral to the operation of the unit (lights, receptacles, etc.), the power feed will come from the closest available source. This method has been proven to provide the level of availability required for power generating stations.

6.1.1. Spare bus ampacity of 20% shall be included in the design for low voltage switchgear, low voltage MCCs, and panelboards. 10% spare bus ampacity shall be included in the design of 4.16kV switchgear and MCCs. As-built conditions may be less. At each level, all required spare capacity for bus ampacity will be added as required so it is not counted more than once. On double ended

lineups the spare transformer capacity will be accounted for only during normal operation (tie breaker open).

6.2. Cable Ampacity Study:

6.2.1. A detailed cable ampacity study will not be completed at this stage. Conductors for use in the system analysis study shall be modeled with aboveground ampacities and underground ampacities in accordance with the National Electrical Code.

6.3. Raceway Design:

6.3.1. Duct banks will not be sloped. A minimum of 25% spare of conduit will be installed in duct banks. This will apply to main trunk runs only. Areas that will include spare duct bank are runs from one manhole/vault to another manhole/vault, a manhole to another building, or a building to another building.

a. Areas that will have only the required number of conduits provided to serve the equipment are:

i. Underground conduit runs from the CTG MFGR provided module to areas inside of the power block

ii. Power conduits from switchgear/MCC to motor or another load

iii. Control conduits from DCS to field equipment

iv. Instrumentation conduits from DCS to field equipment

6.4. Grounding and Lightning Protection:

6.4.1. Grounding studies shall be performed at a later stage of design.

6.4.2. Lightning protection studies shall be performed at a later stage of design.

6.5. Lighting and Receptacles:

6.5.1. All outdoor lighting will be LED type. The lighting design shall minimize light trespass without compromising requirements for adequate lighting for security and road safety. The lighting entering/exiting and inside of Contractor provided buildings and modules will be designed by Contractor and/or subcontractors. Lighting levels in all areas (indoor and outdoor) will be in accordance with ANSI-IES RP-7 and RP-8 recommended illumination levels.

6.5.2. Emergency lighting will be powered from an AC power supply and will be provided with an integral 90-minute battery backup.

6.5.3. Convenience receptacles are not considered at this stage of design.

6.5.4. Welding receptacles are not considered at this stage of design.

6.6. Electrical System Analysis:

6.6.1. Electrical system analysis studies will be performed throughout the project using ISBL equipment information, Contractor estimate information, and utility information.

6.6.2. The system analysis includes load flow, short circuit and motor starting studies. The studies will be performed using ETAP and will create an overall model of the electrical system. The loads will be entered in a one-line format with all known information at the beginning of the project. The system analysis will:

a. Confirm equipment ratings (bus ampacity rating and short circuit rating) for MV switchgear, LV switchgear, and LV MCC.

b. Confirm secondary unit substation (SUS) transformer sizes and impedances.

c. Confirm required tap settings for MPT and SUS transformer to operate correctly during periods of normal, minimum, and maximum voltage in the switchyard. Temporary voltage drops during motor starting shall not extend below 80% of the motor rated voltage at the terminals of the motor being started. Non-starting motors on the same voltage level bus shall not have a voltage of less than 80% of rated voltage at the motor terminals.

6.6.3. In order to confirm the information above, the system study will include several basic operating scenarios. Final operating scenarios will be determined during later stages of design.

6.6.4. The system analysis will be calculated using as-designed equipment loading and considers spare capacity using load diversity on relevant buses.

6.7. Relaying:

6.7.1. Relaying and coordination studies will not be performed at the time of the FEED Study. The plant electrical system shall be designed with future relaying and protection schemes anticipated.

6.8. UPS and Battery Calculations:

6.8.1. The Battery, Battery charger and Uninterruptible Power Supply (UPS) sizing study will confirm the sizing of the DC battery chargers once the loads are attached to the system. Additionally, the study will confirm the size of the UPS system. Parameters which will be considered during the sizing study are:

a. The plant battery will be sized to serve the DC and UPS loads for 2 hours.

b. Each battery charger will be sized to recharge its battery system within 24 hours while simultaneously providing power to the normal continuous DC loads including the UPS inverter.

c. The DC system shall be designed to provide equipment with minimal risk to people or equipment. The typical plant DC loads include turbine generator emergency lube oil pumps, UPS, and switchgear control. Assessment of the plant DC loads will be made to determine the appropriate quantities and locations for the plant DC system. Each DC system will include a battery, redundant battery chargers, DC ground detection, and DC distribution panels. Electrical calculations will be performed to verify DC system ratings and interrupting capabilities.

6.9. Design margin on the Contractor provided battery systems will be 10% of demand load and derated for 25% aging factor as recommended by IEEE 485.

a. The UPS system will be furnished to supply the essential loads plus 20% spare capacity. The UPS design margin requirements will be shown only on the UPS load profile. This load will roll up to the batteries and the batteries will have their own required spare capacity added.

b. The DC and associated UPS systems will have the same availability period after loss of normal power. Therefore, the total UPS load will be shown as one-line item on the DC system. In addition, loads requiring both UPS and DC such as DCS cabinets will only be shown on the UPS calculation and rolled up to the battery and charger sizing calculation.

6.10. Heat Trace:

6.10.1. Allowances in the project load list shall be provided for heat trace panels to provide adequate winterization of process equipment. A detailed heat trace design will not be provided at this time.

END OF SECTION

Appendix CC

OSBL Site Geotechnical Guidance

This space intentionally left blank

Appendix DD

OSBL Structural Design Criteria

Kiewit

STRUCTURAL DESIGN CRITERIA
20041223-SDC-001

RETROFITTABLE ADVANCED COMBINED CYCLE INTEGRATION FOR FLEXIBLE DECARBONIZED GENERATION
DE-FE-0032131

KIEWIT PROJECT NO. 20041223

ISSUED: MARCH 20, 2023

REVISION 0 – ISSUED FOR FEED

STRUCTURAL DESIGN CRITERIA (SDC)

1. PROJECT DESCRIPTION

The project is a FEED Study and includes the design of a carbon capture system by Linde with balance of plant (BOP) integration by Kiewit at Plant Barry. The facility, owned by Southern Company, is located at US-61, Bucks, AL 36512.

1.1 Structural engineering/design shall conform to the requirements of the Project Contract.

1.2 The systems will consist of, but are not limited to:

a. Foundations

1. (ISBL)
   - (10-T1010, 20-T1010) DCC Column
   - (10-T2010, 20-T2010) Absorber Column
   - (10-D7210, 20-D7210) Solution Storage Tank
   - (10-Y5010, 20-Y5010) CO2 Compressor Unit
   - (10-D7250, 20-D7250) Solution Make-up Vessel
2. (OSBL)
   - (0001) Administration Building
   - (0006) Fire Pumphouse
   - (0036) Electrical Enclosure
   - (0100) Cooling Tower
   - (0104) Circulating Water Pumps
   - (0105) Auxiliary Circulating Water Pump
   - (0111) Cooling Tower Chemical Feed
   - (0112) Oil Water Separator
   - (0118) Demineralized Water Pump Skid
   - (0138) Potable Water Tempering Skid
   - (0147) Sample Panel
   - (0150) Tower Chem Feed Sump and Pumps
   - (0155) EGR Heat Exchanger
   - (0173) Air Compressor
   - (0174) Air Dryer
   - (0175) Dry Air Receiver
   - (0319) Wet Air Receiver
   - (0321) Wastewater Sumps and Pumps
   - (0750) Substation
   - (0841) Linde Electrical Equipment
   - Steam Integration Support Steel
   - EGR-to-Carbon Capture Duct & Piping Support Steel

b. Steel Structures
   1. (ISBL) *(No items identified at this time)*
   2. (OSBL)
      - Steam Integration Support Steel
      - EGR-to-Carbon Capture Duct & Piping Support Steel

Note: Refer to Kiewit plot plan drawing 20041223-PP-001 and Linde drawing AE-L-ZP 1002(EN) for complete building / equipment lists.

2. INDUSTRY CODES AND STANDARDS

2.1 As a minimum, all structures shall be designed in accordance with the requirements or recommendations contained in the Codes and Standards referenced in this document. When an edition date is not indicated, the latest edition and addenda referenced in the adopted version of IBC shall apply. Where not referenced in the building code the latest edition shall apply.

2.1.1 Building Codes:

a. 2018 International Building Code (IBC) as adopted by Mobile County in the State of Alabama
b. ASCE 7-16 – Minimum Design Loads for Buildings and Other Structures
c. ASCE 37- Design Loads on Structures During Construction
d. ACI 318-14 – Building Code Requirements for Structural Concrete
e. AISC 360-16 – Specification for Structural Steel Buildings contained within AISC Steel Construction Manual 15th edition.

2.1.2 Industry Standards and Federal Regulations:

a. National Fire Protection Association Standards (NFPA) 101 – Life Safety Code
b. NFPA 850, Recommended Practice for Fire Protection for Electric Generating Plants and High Voltage Direct Current Converter Stations
c. Title 29, Code of Federal Regulations (CFR), Part 1910, Occupational Safety and Health Standards
d. Title 29, Code of Federal Regulations (CFR), Part 1926, (OSHA) Standards for the Construction Industry
e. Title 40, CFR Section 112 et seq., US Environmental Protection Agency (EPA)

3. GEOTECHNICAL ENGINEERING

As a minimum, all structures shall be designed in accordance with the recommendations contained in the:

a. "Preliminary Geotechnical Guidance" engineering report prepared by Brian Linnan and Jonathan Blanchard, dated March 9, 2023.
b. Geotechnical engineering services report dated June 1, 1998 and provided to Kiewit by Southern Company and/or Alabama Power representatives. The report is associated with Project Number ES2604.

3.1 Specifications: Not Used

3.2 Stability Considerations and Factors of Safety: The use of strength or service load combinations shall be permitted. The use of either method will result in a factor of safety of 1.5 for sliding, overturning, uplift, and buoyancy based on the Reliable Dead Load.

3.2.1.1 Resistance Factors. Parameters for use are as specified in Section 3.6.

3.3 Frost depth is assumed to be 1'-0" below top of grade.

3.4 To the extent possible, foundations shall bear on only one type of bearing material. Proper contraction joints and additional reinforcement should be used if foundations must bear on differing materials.

3.5 Foundation Settlement. See section 6.7.1.

3.6 Foundations. Given uncertainties regarding the limits of the organic stratum discussed within the referenced June 1, 1998 geotechnical report, shallow foundations shall only be considered for the lightest loads. Shallow foundations are viable for bearing pressures of 2,000 pounds per square foot or less and foundation widths of 20 feet or less. Settlement of such footing is expected to be less than one inch. To mitigate the impacts of the organic stratum, H-piles shall be used as the primary design basis for all but very lightly loaded foundations for which settlement shall be minimal. HP14x73 piles are recommended in the 1998 geotechnical report for use in the site. Design axial capacities for the recommended pile tip elevation are presented below.

Pile Type	*Pile Cutoff Elevation (feet, MSL)*	*Pile Tip Elevation (feet, MSL)*	*Design Compressive Load Capacity (kips)*	*Design Uplift Capacity (kips)*
HP14x73	+22.5	-70	150	100

Based on Kiewit's belief that the problematic organic layer may not extend into ISBL or OSBL areas, auger displacement piles are technically feasible and shall be reviewed as an option to driven H-piles where appropriate. Auger displacement piles are likely to be the least expensive deep foundation type. Ultimate capacity versus depth plots for 18-inch and 24-inch-diameter auger displacement piles are shown in Figure 1.

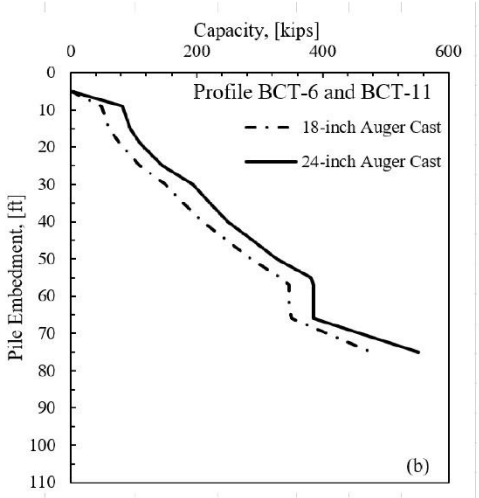

Figure 1. Ultimate Capacity versus Depth Auger Displacement Piles

The table below is preliminary and summarizes key foundation related parameters. Site specific recommendations are forthcoming from Kiewit's geotechnical personnel.

Soil Stratum	Allowable End Bearing Capacity (psf) *1	Allowable Side Friction (psf)	Cohesion (psf)
Upper 5-feet Original or Undocumented Fill Soils	N/A	N/A	N/A
Structural Fill 3 feet below a the surface grade, compacted to at least 90% of modified Proctor	3,000	425	1,750
Silt/Lean Clays N≤4	500	60	250
Silt/Lean Clays 4<N≤10	1,425	200	750
Silt/Lean Clays N>10	3,250	500	2,000
Fat Clays N≤10	1,000	150	500
Fat Clays N>10	2,750	400	1,600
Weathered *2 Limestone	100,000	1,750	1,900
Competent *2 Limestone	250,000	2,500	3,650

*1.) To use the recommended bearing capacity, the capacity utilized must extend at least 2 times the minimum width below the bottom of the footing. If the soil of that capacity does not extend that deep and the underlying capacity is less than the overlying capacity, then the bearing capacity should be prorated proportional to the thickness of each bearing capacity within the 2B depth.

*2.) Deep Foundation End Bearing, Minimum socket depth of 2-feet, 3-feet minimum socket depth on downhill side of ravine slopes.

4. STRUCTURAL DESIGN LOADS

4.1 Risk Category, formerly Occupancy category, of buildings and other structures for wind, seismic, snow, and ice loads shall be Risk Category III.

4.2 **Dead Loads (D):** Dead load shall consist of the weight of all permanent and semi-permanent construction including, but not limited to, fixed equipment, framing, piping, floors, walls, roofs, partitions, insulation, stairs, handrail, ductwork, siding, cable trays, conduits, and other structures.

4.2.1 Minimum Design Dead Loads:

Concrete (normal weight)	150 pcf
Concrete (light weight)	110 pcf
Steel	490 pcf
Steel Connections	10% of structural steel
Soil (per geotechnical report)	115 pcf
Steel Bar Grating	
1 ¼"	10 psf
2 ½"	18 psf
Floor Plate (1/4")	12 psf

4.2.2 **Reliable Dead Load (RD):** Reliable dead load shall be taken as the minimum dead load(s) likely to be in place during the event causing sliding, overturning, uplift, and buoyancy. These do not include water or oil in equipment vessels unless such vessels are provided by OEM with such liquids inside.

4.2.3 **Superimposed Dead Load (SD):** Superimposed dead load shall account for small-bore piping load and other miscellaneous loadings.

Collateral	20 psf

4.3 **Buoyancy Loads (B):** Those forces that result from pore water pressure associated with foundations that exist below the groundwater table.

Design groundwater = Per the referenced June 1, 1998 geotechnical report, the perched water table is 6 to 7.5 feet below grade. Deeper aquifer groundwater is 18.5 to 22 feet below grade.

Per Kiewit's Preliminary Geotechnical Guidance document, groundwater levels in borings closest to the planned construction ranged between 2 and 17 feet below grade.

4.4 **Equipment Loads (E):** Equipment dead loads shall be specifically determined and located. For major equipment, structural members, and bases shall be specifically located and designed to carry the equipment load into the structural system.

Dampers	Per OEM

Expansion Joints Per OEM

4.4.1 Pipe Loads:

a. Pipe hanger loads for the major piping systems shall be specifically determined and located.
b. Piping expansion and dynamic loads shall be considered on an individual basis for their effect on the structural systems.
c. Loads imposed on perimeter beams around pipe chase areas shall also be considered on an individual basis.
d. For other areas, pipe loads shall be treated as uniform loads per unit floor area and shall be carried to the columns and foundations as dead loads. Pipe loads shall not be considered as reliable dead load for uplift.
e. Piping loads for both hot large bore and hot small-bore supports will be provided by the Pipe Stress team. Piping loads for cold large bore supports will be generated using department standard MathCAD calculations which generate wind loading based on the pipe size and tributary length of pipe and both seismic and dead loads based on the weight per foot of pipe and tributary length of pipe being supported. Only pipes 6" and smaller in diameter will contain water. Cold small bore piping loads are assumed to be accounted for by the Superimposed Dead Load. See Table below for assumed weights and max spans based on pipe diameter.

Pipe Diameter (in)	Pipe Material Weight (plf)	Water Weight (plf)	Insulation Weight (plf)	Total Weight (plf)	Max Span (ft)	Max Weight (lbs)
0.375	0.74	0.06	0.40	1.20	5	6.0
0.50	1.09	0.13	0.48	1.70	5	8.5
0.75	1.48	0.23	0.54	2.25	5	11.25
1.00	2.17	0.37	0.61	3.15	7	22.05
1.25	3.00	0.56	0.70	4.26	7	29.75
1.5	3.63	0.77	0.76	5.16	9	46.35
2.0	5.03	1.27	0.88	7.18	10	71.80
2.5	7.67	1.84	1.01	10.52	11	115.72
3.0	10.26	2.86	1.18	14.30	12	171.60
3.5	12.52	3.85	1.31	17.68	13	229.84
4	15.00	4.98	1.44	21.42	14	299.88
5	20.80	7.88	1.72	30.40	16	486.40
6	28.60	11.29	2.00	41.89	17	712.13
8	43.43		2.52	45.95	19	1248.87
10	54.79		3.08	57.87	22	1984.40
12	65.48		3.60	69.08	23	2668.92
14	72.16		3.93	76.09	25	3339.5
16	82.85		4.45	87.30	27	4422.68
18	93.54		4.97	98.51	28	5510.96

20	104.23		5.50	109.73	30	6975.9
22	114.92		6.02	120.94	30	8128.5
24	125.61		6.54	132.15	32	9987.2
26	136.30		7.07	143.37		
28	146.99		7.59	154.58		
30	157.68		8.12	165.80		
32	168.37		75.66	244.03		
34	179.06		84.82	263.88		
36	189.75		94.51	284.26		
42	224.82		126.71	351.53		
48	253.89		163.62	417.51		

4.4.2 Cable tray loads:

Tray Width	Max Cable Weight (lb/ft)	Max Tray Weight Per Foot of Tray Length (Tray + Cable + Lighting) (lb/ft)
6”	23	30
9”	35	43
12”	45	53
18”	70	79
24”	90	100
30”	115	126
36”	140	152
42”	160	173
48”	183	197

Notes:

a. 200 lbs will be added to each hanger load to account for the weight of a man.
b. Weight per foot of cable tray may be reduced when needed if approved by the lead structural engineer and the actual number and sizes of cables are confirmed with electrical.
c. Cable tray loads shall not be considered as reliable dead load for uplift.
d. Support of cable tray shall comply with Kiewit electrical tray support details and NEMA VE2 requirements.

4.5 **Fluid Loads (F):** See Operating Loads Section below.

4.6 **Live Loads (L):** Live load shall be considered as loading not permanently fixed to the structure and occurring over areas not occupied by equipment.

4.6.1 The temporary loading of parts of equipment that may be placed on floors during dismantling and maintenance, or to be temporarily placed on or moved over floors during installation and maintenance should be considered. For equipment weighing less than the uniform live load, the structural system shall be designed for the uniform live load.

4.6.2 Live Load Posting and Drawing Notation: Live load posting will be achieved in the field by permanent signage per IBC Sections 106.1 and 1603.1.1, which states the maximum live load that shall apply to these areas. The live load used for design shall be specified in the general notes, specific structure notes, or load diagrams. If a special live load applies to a partial area, the limits of the special loading shall be shown on the drawings and the area shall be posted accordingly.

4.6.3 Floors and roofs shall be designed to support the minimum uniformly distributed live or concentrated loads given in the tables below, whichever produces the greater effect. The concentrated load shall be located to produce maximum stress conditions in the structural member.

LIVE LOADS	
Location	**Load**
Exitways, catwalks, and walkways used to access maintenance and service areas	60 psf
Platforms used for access, maintenance, and service purposes	100 psf
Stairs and exits	100 psf
Roofs	20 psf
Roof Dust Load	11 psf
Guardrails (for stairs, platforms, etc.)	20 plf
Truck loading surcharge adjacent to structures	250 psf
Crane Surcharge adjacent to structures	2,000 psf
Vehicle Surcharge	AASHTO HL-93
Fire Protection Sprinkler Head Support	Per NFPA 13 (5 x water weight + 250 lbs)
Ductwork	
Ash Load	0 pcf
Maintenance	40 psf
Operating Load Pressure	
Positive	+10 WC
Negative	- 20 WC
Excursion/Operating Load Transient Pressure	
Positive	+35 WC
Negative	- 35 WC

Notes:

a. Live load reductions shall be in accordance with ASCE 7 and shall not be permitted in lay down areas, or for roof loads. (Note: LL > 100 psf are not reducible per IBC 1607.11.1.2)
b. Concentrated load and distributed load on handrails need not be assumed to act concurrently
c. Design lane load may be omitted as permitted by AASHTO

CONCENTRATED LIVE LOADS	
Location	**Loads**
Roof	675 lbs (Note a & b)
Storage Areas	2,000 lbs (Note a & b)
Platforms used for access, maintenance, and service purposes	1,000 lbs (Note a & b)
Exitways, catwalks, and walkways used to access maintenance and service areas	300 lbs (Note a & b)
Isolated Platform for Servicing Equipment	250 lbs (Note a & b)
Stair Treads	300 lbs (Note c)
Top rail of guardrail and handrail	200 lbs (applied in any direction)
Midrail of guardrail	150 lbs (applied in any direction)
Fixed Ladders, per 10 feet of height	300 lbs

Notes:

a. Beams and girders shall be individually designed for a minimum vertical concentrated live load acting at their centerline. This load is not required to be carried to the columns.
b. Concentrated over a 2½' x 2½' square (6.25 sq. ft.) area and located to produce maximum stress in the member.
c. Concentrated over a 4 sq. in. area at center of tread

4.6.4 Truck Loading: Refer to the American Association of State Highway Transportation Officials (AASHTO) LRFD Bridge Design Specifications, 6th Edition, 2012.

4.6.4.1 Underground piping, conduits, trenches, sumps, floors, slabs, and foundations accessible to truck traffic shall be designed for HL-93 wheel loads.

4.6.5 Construction Loads:

4.6.5.1 Loads during construction will be determined per ASCE 37 "Design Loads on Structures During Construction"

4.6.6 Contingency Loads: To account for other unknown loads, contingency dead loads shall be applied as concentrated loads at the locations which cause maximum shear and moment on all beams, girders, and trusses as noted below. These contingency loads are not to be carried as end reactions to other members, but each member's connection shall account for its contingency load. Contingency loads shall only be combined with uniform loads in areas of known piping and cable tray for which actual loads are not yet available.

CONTINGENCY LOADS	
Location	Load
Beams	2 kips
- Operating Floor	25 kips
- Mezzanine Floor	10 kips

- Roof Purlins (Unoccupied Roofs)	1 kip concentrated load and 10 psf in areas with fire sprinklers and lights
- Other	2 kips
Wall Girts	1 kip concentrated load
Columns	
- Buildings	25 kips
- Pipe Racks and Material Handling Structures	10 kips
- Metal Building Structures	10 kips
- Miscellaneous columns and posts	5 kips

4.6.7 Impact Loads: Per section 4.6 of ASCE 7. Impact loads shall be added to other loads for components supporting reciprocating or rotating machines, elevators, hoists, cranes, or other equipment creating dynamic forces. The following impact loads shall be used unless manufacturers recommend higher values, or analysis indicates different values.

4.6.7.1 Impact loads for powered monorail cranes (as a percentage of maximum wheel loads):

a. Vertical impact load: 25%
b. Lateral force acting at the top of the bottom flange: 20%
c. Longitudinal tractive force acting at the top of the bottom flange: 10%

Reference: ASCE 7, Section 4.9

4.6.7.2 For Bridge Crane Loads (Bridge Cranes are Cab & pendant-operated cranes) see the structure specific Design Criteria and the following references:

a. AISC Design Guide 7 – Industrial Buildings Roofs to Anchors
b. AIST/AISE Technical Report No. 13 – Guide for the Design and Construction of Mill Buildings
c. CISC – Guide for the Design of Crane-Supporting Steel Structures

4.6.7.3 Load combinations including crane load. The effects of vertical and horizontal crane loads shall be considered with live loads and other loads as recommended by AISE Subcommittee No. 13 on the Design and Construction of Mill Buildings.

4.6.7.4 Not Used

4.6.7.5 Rotating and reciprocating equipment – 50 percent of the machine weight or as provided by the equipment vendor.

4.6.7.6 Hangers supporting floors and platforms – 33 percent of the sum of the dead load and reduced live load.

4.6.7.7 Impact loading associated with braking forces during transport shall be considered.

4.7 Flood Load ($\mathbf{F_a}$): (NOT USED)

4.8 Snow Loads (**S**): All buildings, structures, equipment and piping shall be designed to resist snow loads in accordance with ASCE 7 Chapter 7.

a. Ground Snow Load (p_g) = 0 psf
b. Exposure Factor (C_e) = 1.0
c. Thermal Factor (C_t) = 1.2
d. Importance Factor (I) = 1.0
e. Surface Roughness Category (Terrain Category) = C
f. Rain-On-Snow Surcharge = 0 psf

4.8.1 Unbalanced and drift loads must be considered per ASCE 7.

4.9 Rain Loads (**R**): Rain Loads shall be per ASCE 7 & IBC

4.9.1 Design Storm Events
a. 25-year, 24-hour rainfall = 10.3 inches
b. 100-year, 24-hour rainfall = 14.0 inches

4.10 Ice Loads ($\mathbf{D_i}$): Where applicable, design structures, equipment, ductwork and piping to resist ice loads in accordance with ASCE 7 Chapter 10.

a. Nominal Ice Thickness (t) = 0.5"
b. Design Ice Thickness for Freezing Rain (t_d) = 0.51"
c. Importance Factor (I_i) = 1.0 for ice loading only
d. Importance Factor (I_w) = 1.0 for ice and wind loading
e. Topography Factor (K_{zt}) = 1.0
f. Concurrent Wind Speed (V_c) = 30 mph
g. Temperature Concurrent w/ Ice Caused by Freezing Rain = 25°F
h. Height Factor (f_z) = 1.20

4.11 Seismic Loads (**E**):

4.11.1 The total operating weight of a piece of equipment or structure shall include, but not be limited to, fluids, insulation, valves, piping, etc.

4.11.2 For all Buildings, Structures, Nonbuilding Structures, ductwork, Equipment and Components the following applies:

Site Class		D
Seismic Design Category		B
Importance Factor	(I_e)	1.0
Nonstructural Components		
Importance Factor	(I_p)	1.0
Component Strength Factor	(R_p)	3.0
Overstrength Factor	(Ω_o)	2.0

Spectral Response Acc Parameter Short Periods	(S_s)	0.115g
Spectral Response Acc Parameter Period of One Second	(S_1)	0.063g
Site Amplification Factor @ 0.2 sec	(F_a)	1.6
Site Amplification Factor @ 1.0 sec	(F_v)	2.4
Design Spectral Response Parameter Short Periods	(S_{DS})	0.109
Design Spectral Response Parameter Period of One Second	(S_{D1})	0.102

4.11.3 For small pumps, skids, and other equipment where the specific seismic coefficients of Table 15.4-2 of ASCE 7 do not apply the following Structural Seismic Coefficients shall be used:

R=1.25
Ω=2.0
Cd=2.5

4.11.4 In accordance with the ASCE "Guidelines for Seismic Evaluation and Design of Petrochemical Facilities" for Ductwork Support Structures the following Structural Seismic Coefficients shall be used:

R = 1.5
Ω = 1.0
C_d = 1.5

4.11.5 For additional guidance on Non-Building Structures reference ASCE 41140 – Seismic Evaluation and Design of Petrochemical Facilities.

4.12 Wind Loads (**W**):

4.12.1 Wind loads shall be per ASCE 7 & IBC. The following criteria apply:

Parameter	Variable	Value
Altitude of Site (Approximate TOG)		23 ft
Basic Wind Speed	V	153 mph
10-Year MRI Wind Speed		90 mph
Exposure Category		C
Topographic Factor	K_{zt}	1.0
Risk Category		II
Importance Factor	(I_w)	1.0
Building Enclosure Classification		Partially Enclosed
Directional Factor, Structural Members & Pipe	K_d	0.85
Directional Factor, Equipment	K_d	1.0
Ground Elevation Factor	K_e	1.0
Gust Effect Factor	G	0.85
Velocity Pressure Exposure Coefficient	K_h & K_z	
Force Coefficient, Structural Members	C_f	1.8
Force Coefficient, Pipes	C_f	0.7
Force Coefficient, Equipment		Varies

Velocity Pressure	q_z	Varies
Design Wind Force	F	Varies

4.12.2 For additional guidance on Non-Building Structures reference ASCE 41180 – Wind Loads for Petrochemical and Other Industrial Facilities.

4.12.3 Minimum wind load pressure shall be 16 psf.

4.12.4 Allowance shall not be made for the effect of shielding by other structures.

4.12.5 Wind loading during transport shall be considered. Refer to ASCE 37-14.

4.12.6 Winter and summer prevailing wind directions are NW and S respectively.

4.13 Vibration, Operating, and Test Loads: Vibration, operating, and test loads are typically treated like as loads in load combinations. These loads can occur simultaneously or independent of each other and other live loads. The engineer shall clearly justify combinations in their calculations.

4.13.1 Vibration Load: Vibration Load shall be defined as those forces which are caused by vibrating or rotating machinery such as pumps, blowers, fans, and compressors. For heavy vibratory loads, design allowable parameters shall be modified to prevent structural fatigue. All supports and foundations for vibrating equipment shall be designed to limit vibration to an acceptable level.

4.13.2 Operating Loads (**OL**): Operating loads shall include the weight of equipment liquid contents and any movement loads associated with such, thermal loads, test loads, normal and abnormal(upset) loads, maintenance loads, and unbalanced pressure loads.

4.13.2.1 Operating Weight shall be the dead weight plus the weight of any fluid or solid present during operation or permanently stored materials. The contents of tanks and bins shall not be considered effective in resisting uplift due to wind forces but shall be considered effective for seismic forces.

4.13.2.2 Test Loads: Test Loads shall be defined as the Dead Load plus the weight of any liquid necessary to pressure-test vessels, equipment, or piping.

4.14 Thermal and Self-Straining Forces (**T**):

4.14.1 Self-straining forces can arise from contraction or expansion resulting from temperature change, shrinkage, moisture change, creep in component materials, movement due to differential settlement, or combinations thereof.

4.14.2 Thermal load shall be defined as those forces caused by a change in temperature. Thermal load results from both operating and environmental conditions. Such forces shall include those caused by vessel or piping expansion or contraction, and expansion or contraction

of structures. Thermal loads and displacements caused by operating conditions shall be based on the design temperature of the equipment rather than the operating temperature.

4.14.3 The extreme winter and summer temperatures are 0°F, and 105°F respectively.

4.14.4 External steel structures shall be designed with the capability to withstand forces due to thermal expansion of F_{Δ}= 105°F. Ductwork shall be designed, and expansion accounted for, assuming an operating temperature of 224 °F and a design temperature of 245 °F.

Thermal expansion of steel is: (0.0000065 x Δt°F x Length(inches) = Expansion (inches).

4.15 Lateral Soil/Water Loads (**H**): Provision shall be made for the lateral pressure of adjacent soil and due allowance for possible surcharge from fixed or moving loads. When a portion of the whole of the adjacent soil is below a free-water surface, computations shall be based upon the weight of the soil diminished by buoyancy, plus full hydrostatic pressure.

4.15.1 Lateral earth pressure should be based on the soil parameters provided in the project geotechnical engineering report.

5. DEEP FOUNDATIONS AND GROUND IMPROVEMENTS

5.1 Design and placement of the deep foundation and ground improvement systems shall follow the recommended practices of the IBC, ACI 318, AISC 360, and Kiewit Standards as applicable.

5.2 The following Codes and Industry Standards are to be referenced:

a. Concrete Elements – Refer to Section 6.2
b. Steel Elements – Refer to Section 8.2

5.3 Project Specifications: All deep foundations and ground improvements shall be designed in accordance with the requirements contained in the following project specifications:

a. 95.51.36.006 – Deep Dynamic Compaction

5.4 The following deep foundation and ground improvement systems are used on this project:

System	Foundations Supported/ Location of Application	System Design Responsibility
Auger Cast Piles	ISBL & OSBL	Kiewit
Driven H-Piles	Where Soil Does Not Allow Auger Cast Piles	Kiewit

6. CONCRETE

6.1 Design and placement of structural concrete shall follow the recommended practices of the American Concrete Institute (ACI) including ACI 318, ACI 301, IBC, and the Concrete Reinforcing Steel Institute (CRSI).

6.2 The following Codes and Industry Standards are to be referenced for concrete design:

a. American Concrete Institute (ACI) 117 – Specifications for Tolerances for Concrete Construction and Materials
b. ACI 207.1R – Guide to Mass Concrete
c. ACI 211.1 – Standard Practice for Selecting Proportions for Normal, Heavyweight, and Mass Concrete
d. ACI 212.3R – Chemical Admixtures for Concrete
e. ACI 224R – Control of Cracking in Concrete Structures
f. ACI 224.3R – Joints in Concrete Construction
g. ACI 301 - Specifications for Structural Concrete for Buildings
h. ACI 302.1R – Guide for Concrete Floor and Slab Construction
i. ACI 304R – Guide for Measuring, Mixing, Transporting and Placing Concrete
j. ACI 305R – Guide to Hot Weather Concreting
k. ACI 306R – Guide to Cold Weather Concreting
l. ACI 308.1 – Specification for Curing Concrete
m. ACI 308R – Guide to Curing Concrete
n. ACI 318 – Building Code Requirements for Structural Concrete and Commentary
o. ACI 336.1 – Specification for the Construction of Drilled Piers
p. ACI 347 – Formwork for Concrete, including Guide ACI-347R
q. ACI 350 - Code Requirements for Environmental Engineering Concrete Structures & Commentary
r. ACI 350.2R – Concrete Structures for Containment of Hazardous Materials
s. ACI 351.1R – Grouting between Foundations and Bases for Support of Equipment and Machinery
t. ACI 351.2R – Foundations for Static Equipment
u. ACI 351.3R – Foundations for Dynamic Equipment
v. ACI 360R – Design of Slabs-on-Ground
w. ACI SP-66 – ACI Detailing Manual
x. International Standard Organization (ISO) 3SO 3945-85 - Mechanical Vibration of Large Rotating Machines with Speed Range from 10 to 200 revs/sec-Measurement and Evaluation of Vibration Severity In-Situ.
y. PCI Design Handbook – Precast and Prestressed Concrete

6.3 The following department standards shall be followed:
a. Concrete Reinforcement Shop Drawing Review

6.4 PROJECT SPECIFICATIONS: All structures shall be designed in accordance with the requirements contained in the following project specifications:

a. 95.60.02 – Driven Precast Concrete Piles
b. 95.60.02.004 – Steel Driven H-Piles
c. 95.60.04.016 – Drilled Piers
d. 95.60.04.004 – Auger-Cast Grout Piles
e. 95.60.04.018 – Micro-Piles
f. 95.60.04.006 – Helical Piers
g. 93.61 – Concrete Forming
h. 93.61.02 – Cast-In-Place Concrete
i. 93.61.12 – Precast Structural Concrete
j. 93.61.08 – Grouting
k. 93.61.04 – Concrete Reinforcement
l. 93.61.10 – Concrete Accessories, Anchors, and Embedments
m. 95.87A – Coatings for Concrete and Masonry

6.5 MATERIALS

6.5.1 The design of structural concrete shall be per the following table:

Structure Type	Required Strength
General Structures and Foundations	4,500 psi
General Structures and Foundations with Helix	4,500 psi
General Structures – Walls 12" or less in width	4,500 psi
Duct Banks with Reinforcement	3,000 psi
Duct Banks with Helix	3,000 psi
Lean Concrete Mud Mat	2,000 psi
Cooling Tower	4,500 psi
Thermal	4,500 psi
Flow Fill (non-structural)	100 psi
Self-Consolidating	4,500 psi
Reinforcing	ASTM A615, Grade 60 ksi ASTM A615, Grade 80 ksi
Weldable Reinforcing	ASTM A706, Grade 60 ksi ASTM A706, Grade 80 ksi
Welded Wire Fabric	ASTM A185
Helix	Helix 5-25 Micro Rebar – In compliance with Uniform Evaluation Report No. 0279

6.6 Special Instructions:

6.6.1 All equipment foundations and supports shall be designed to resist project specific loadings and the loadings furnished by the equipment manufacturer. Each foundation shall be designed and constructed as a monolithic reinforced concrete structure supported in accordance

with the project soils report recommendations.

6.6.2 The foundation design shall address the following considerations:

a. Soil bearing capacities, pile capacities, and earth pressures
b. Allowable settlements
c. Equipment, structure, thermal, and environmental loads
d. Dynamic effects of rotating machinery see ACI 351.3R
e. Access and maintenance
f. Equipment performance criteria

6.6.3 Induced Forces: The major equipment shall be securely anchored to the foundation using cast-in-place steel anchor bolts, guides and variable supports designed to resist the equipment forces.

6.6.4 Analytical Techniques: Mats shall be proportioned such that the resultants of the soil/pile reactions coincide as nearly as possible with the resultant of the vertical loading.

6.6.5 Foundations shall be checked for dynamic response of the operating equipment if applicable. Calculations based on the fundamental principles of dynamic behavior of structures shall be used to determine the natural frequencies of the support system. Each concrete foundation shall be analyzed as a rigid body on springs. The foundations shall be proportioned such that the principal natural frequencies shall be at least 25 percent removed from the equipment operating speed and /or as required by the Equipment manufacturer. The foundation's vibration response and/or stiffness shall be within the limits required by the equipment manufacturer for the given unbalanced loads vs. frequencies.

6.6.6 Foundation Walls and Retaining Walls:

6.6.6.1 Below grade structures shall be designed for applicable earth/water pressure plus an appropriate surcharge load. Surcharge loads may include adjacent foundations that may or may not be clearly defined at the stage of design.

6.6.6.2 Exterior foundation walls and retaining walls shall be designed to resist at least the superimposed effects of the total static lateral soil and ground water pressures, excluding the pressure caused by any temporary surcharge, plus an earthquake force, Fw, for horizontal backfill surface.

6.6.7 Building mats shall be reviewed for support of cranes for erection of the building and equipment. Stresses in the reinforced concrete mat shall be permitted to increase 1.33 times code allowable when caused by temporary construction loads.

6.6.8 Surfaces sloping of foundations shall be coordinated early in the project through the development of a sloping master plan conforming to contract requirements and through the use of the Design Considerations for Concrete Drainage Guide. The design of each individual foundation shall coordinate with the master plan and the Guide as well.

6.6.9 Outdoor equipment and structural steel foundations shall be a minimum 6 inches above finish grade.

6.6.10 Anchors

6.6.10.1 Anchor rod projections shall be from top of rough concrete and based on the following:

a. Single Nut: Grout + Grip + 2 Bolt Diameters
b. Double Nut: Grout + Grip + 3 Bolt Diameters

6.6.10.2 Unless otherwise directed, account for reduction in nominal anchor strength using the 0.8 factor as directed in ACI 318 for anchors used with built-up grout pads. For bolts with standoff, not installed in grout, design anchors for bending.

6.6.10.3 Post-installed adhesive anchors shall be designed to use one of the standard anchor sizes listed in the table below. Any anchor deviations from this table are to be approved by the Engineer of Record.

Anchor Type	Diameter	Length	Typical Embedment
#1	1/2"	7"	3.25"
#2	1/2"	10"	6"
#3	5/8"	10"	6"
#4	5/8"	12"	8"
#5	3/4"	14"	8"
#6	3/4"	18"	13"
#7	7/8"	14"	8"
#8	7/8"	18"	13"

Notes:
1. All anchors are ASTM F1554 Gr. 55 HDG, made per supplementary requirement S1 for weldability.
2. Table is for HDG threaded rods only. For stainless steel threaded rods, engineer shall determine diameter, length, and embedment based on design.

6.6.10.4 Post-installed adhesive anchors shall be in 2" even increments for length and embedment.

6.6.10.5 Mechanical anchors shall be designed to use one of the standard anchor sizes listed in the table below. Any anchor deviations from this table are to be approved by the Engineer of Record.

Anchor Type	Diameter	Length	Nominal Embedment (h_{nom})	Effective Embedment (h_{eff})
#1	3/8"	5"	2 5/16"	2"

#2	1/2"	7"	3 5/8"	3 1/4"
#3	5/8"	8 1/2"	4 7/16"	4"
#4	3/4"	10"	5 5/16"	4 3/4"

Notes:
1. Expansion anchor bolts shall be Hilti KWIK Bolt TZ2 (ICC ESR-4266) or approved equal in accordance with ICC-ES AC193, and shall be stainless steel for exterior use in the anchor bolt schedule unless noted otherwise.
2. Engineer shall take extra care when utilizing mechanical bolts with conditions that result in large grout stand-off thicknesses. Opting to an epoxy, threaded-type anchor bolt may be more advantageous.

6.6.10.6 Use cast-in-place anchors for diameters greater than 7/8 inch.

6.6.10.7 For additional guidance on anchorage reference ASCE 41258 – Anchorage Design for Petrochemical Facilities.

6.6.10.8 Design thickness under column base plates shall ideally be 1-1/2". The grout thickness should not be less than 1" nor greater than 3". Other grout thicknesses may be used; however, special products must be specified on the contract drawings. Specific equipment requirements will determine if grout is needed.

6.6.10.9 In general, non-shrink, flowable, cementitious type grout shall be used. Epoxy type grout shall generally be limited to use at the following locations:

a. Under and around equipment as specifically required by the equipment manufacturer
b. Under and around rotating and vibrating equipment/machinery base plates, sole plates, fixators, and embedments, miscellaneous pumps, and similar type equipment which produces dynamic vertical and horizontal loads

6.7 Serviceability:

6.7.1 Where equipment manufacturer foundation requirements are not applicable, the maximum allowable total settlement shall not exceed 1 inch, and the maximum allowable differential settlement shall not exceed ½ inch.

7. **MASONRY** (NOT USED):

8. STEEL

8.1 Steel framed structures shall be designed in accordance with the IBC Chapter 22, AISC 360 Specification for Structural Steel Buildings, and AISC 341 Seismic Provisions for Structural Steel Buildings.

8.2 Material specifications shall follow the standards of ASTM International and the American National Standards Institute (ANSI).

8.3 Steel components for metal wall panels and roof decking shall conform to the American Iron and Steel Institute (AISI) Specification for the Design of Light Gage Cold-Formed Structural Members.

8.4 Welding procedures and qualifications for welders shall follow the recommended practices and codes of the American Welding Society (AWS) D 1.1 and D1.3.

8.5 Preparation of surfaces for coating systems shall follow the specifications and standard practices of the Society for Protective Coatings (SSPC), National Association for Corrosion Engineers (NACE), and the specific instructions of the coatings manufacturer.

8.6 Fabrication and erection of grating shall follow applicable standards of the National Association of Architectural Metal Manufacturers (NAAMM).

8.7 The following Codes and Industry Standards are to be referenced for steel design:

a. American Institute of Steel Construction (AISC) 360, "Specification for Structural Steel Buildings"
b. AISC 341, "Seismic Provisions for Structural Steel Buildings"
c. AISC 303, "Code of Standard Practice for Steel Buildings and Bridges"
d. AISC Specification for the Design of Steel Hollow Structural Sections
e. American of Iron and Steel Institute (AISI) - Specification for the Design of Cold Formed Steel Structural Members
f. American National Standards Institute (ANSI) A-14.3 - Safety Requirements for Fixed Ladders
g. ANSI A-126.41 - Safety Requirements for Workplace Floor and Wall Openings, Stairs, and Railing Systems
h. ANSI/NAAMM MBG-531 - Metal Bar Grating Manual
i. ANSI/ASCE Z49.1 - Safety in Welding and Cutting
j. American Society for Testing and Materials (ASTM)
k. American Society of Nondestructive Testing (ASNT)-TC-1A – Recommended Practice for Personnel Qualification & Certification in Nondestructive Testing (NDT)
l. ANSI/ASNT CP-105 - Training Outlines for Qualification of Nondestructive Personnel
m. American Welding Society (AWS) D1.1 – Structural Welding Code - Steel
n. AWS D1.3 – Structural Welding Code - Sheet Steel
o. AWS D1.4 – Structural Welding Code - Reinforcing Steel
p. AWS D1.6 – Structural Welding Code - Stainless Steel
q. AWS 14.1 – Specification for Welding Industrial Mill Cranes
r. Crane Manufacturers Association of America (CMAA) Specification 70 – Multiple Girder Cranes

s. CMAA Specification 74 – Single Girder Cranes
t. Hoist Manufacturers Institute (HMI), Standards
u. Metal Building Manufacturers Association (MBMA) - Metal Buildings Systems Manual
v. Research Council on Structural Connections (RCSC) – Specification for Structural Joints Using High Strength Bolts
w. Steel Deck Institute (SDI) - Code of Standard Practice (COSP)
x. SDI - Diaphragm Design Manual (DDM)
y. SDI - Roof Deck Design Manual (RDDM)
z. SDI - Standard Practice Details (SPD)
aa. SDI - Floor Deck Design Manual (FDDM)
bb. SDI - Manual of Construction with Steel Deck (MOC)
cc. Steel Joist Institute (SJI) - Tech Digest No. 3 - Structural Design Of Steel Joist Roofs To Resist Ponding Loads
dd. SJI - Tech Digest No. 5 - Vibration Of Steel Joist - Concrete Slab Floors
ee. SJI - Tech Digest No. 6 - Structural Design Of Steel Joist Roofs To Resist Uplift Loads
ff. SJI - Tech Digest No. 8 - Welding Of Open Web Steel Joists
gg. SJI - Tech Digest No. 9 - Handling And Erection Of Steel Joists And Joist Girders
hh. SJI - Tech Digest No. 10 - Design Of Fire Resistive Assemblies With Steel Joists
ii. SJI - Tech Digest No. 11 - Design Of Lateral Load Resisting Frames Using Steel Joists & Joist Girders
jj. SJI - Tech Digest No. 12 - Evaluation And Modification Of Open Web Joists & Joist Girders

8.8 The following department standards shall be followed:
a. Construction Tolerances Guide Specification (CTGS)
b. SEGL-01 – Platforming & Access
c. SEGL-02 – Egress Design
d. Shop Drawing Review Guideline
e. Structural & Miscellaneous Steel Shop Drawing Review
f. Steel Connection Standards

8.9 PROJECT SPECIFICATIONS: All structures shall be designed in accordance with the requirements contained in the following project specifications:

a. 93.62.02 – Structural Steel Fabrication & Supply
b. 95.62 – Structural Steel Erection
c. 95.87 – Protective Coatings
d. 94.03.82.100.01 – Overhead Bridge Cranes

8.10 MATERIALS

8.10.1 Structural steel shall be designed using the material properties identified in the PRODUCTS section of the project's S2 General Requirements specification. Coatings shall be consistent with the requirements of the P1 General Requirements specification.

8.10.2 Galvanizing Repair Paint: Per galvanizer recommendation or, in absence of such recommendation, cold Galvanizing Compound with 90% min. metallic zinc powder (zinc dust) by weight of total solids.

8.10.3 Guardrail: All guardrail shall be a two-rail system.

8.10.4 Grating shall be welded bar grating, galvanized, banded and secured with clips. Penetrations requiring field cuts of more than two bars shall be banded.

8.11 Special Instructions

8.11.1 For consistency in calculations, all structural steel will be designed using the Load and Resistance Factor Design Method (LRFD Method).

8.11.2 Friction Loads: Friction loads caused by thermal expansion shall be considered temporary and shall not be combined with wind or earthquake loads. Anchor and guide loads shall be combined with wind or earthquake loads. The following coefficients of friction shall apply as a minimum:

a. Steel to steel = 0.4
b. Steel to concrete = 0.6
c. Proprietary sliding surface = 0.1 or Vendor Data

8.11.3 Connections shall be in accordance with the Steel Connection Design Criteria memorandum.

8.11.4 The transfer of shear force in anchor rods at the column base plate should be limited to 5 kips per rod, maximum of 10 kips per base plate. In some circumstances, larger bolts may be used that can transfer larger shear loads in lieu of shear lugs. Consult with the Engineer of Record and foundation mat design engineer prior to proceeding with design of rods with larger shear forces than those specified above. Otherwise, an alternate shear mechanism must be provided (shear lug, embedded column, etc).

8.11.5 Structural columns shall have their base plates designed to accept, as a minimum, four anchor rods to provide stability during erection. Base plates shall be of sized for placement of four shim stacks.

8.12 Serviceability

8.12.1 Structural members shall be provided with adequate stiffness to control deflections

adversely affecting the strength or serviceability of a structure. Critical deflections resulting from the combination of service loads in accordance with ASCE 7 shall be checked.

8.12.2 Member Deflections

	L	S or W[a]	(D + L)
Roof Members	L / 180	L / 180	L / 120
Floor Members	L / 360	–	L / 240
Floor Grating	1/4"		
Girts (Vertical) Girts (Lateral)	L / 360 L / 180	L / 180	
Crane Rails [b] Top Running (Vertical) Top Running (Lateral) Under Hung	 L / 600 L / 400 or 1" L / 450	 – –	 – –

Notes:

a. The wind load is permitted to be based on a 10-year mean recurrence interval wind speed for the purpose of determining deflection limits. (*Reference: IBC Table 1604.3 note f. and ASCE 7 Appendix C Commentary – Serviceability Considerations)*

b. Live load without impact

8.12.3 Wind Drift Limits: Wind loads may be based on a 10-year mean recurrence interval wind speed for evaluation of drift. (*Reference: ASCE 7 Appendix C Commentary – Serviceability Considerations)*

Construction	Limit
Access platforms	H / 200
Buildings	H / 400
Pipe Racks	H / 200
Vertical vessels	H / 200

8.12.4 Seismic deflection limits are per ASCE 7 provisions.

8.12.5 For ductwork a corrosion allowance of 1/16" shall be assumed.

9. MISC. TOPICS:

9.1 Engineering Software: The following software will be used on the project.

Program	Version	Use
SAFE by CSI Berkley	16.0.2	Concrete structures
L Pile by Ensoft	2015	Deep foundations
SHAFT by Ensoft	2012	Drilled shafts or bored piles
Mathcad Prime by PTC	8.0.0.0	Hand Calculations
TEDDS by TEKLA	2019	Component based design

Hilti PROFIS Engineering Suite	3.0.66	Anchor Bolts and Headed Studs
SAP2000 by CSI Berkley	V21.2.0	Concrete and Steel structures
ETABS by CSI Berkley	Not Used	Composite floors
RAM by Bentley	Not Used	Composite floors
Note: See KP.40 toolbox for software guides and tools.		

9.2 Spill Containment: Spill containment measures shall be provided for potentially hazardous storage or operational areas, such as chemical injection skids, chemical storage areas, oil filled transformers, lube oil skids and diesel storage tanks. See project Containment Drains and Discharge Index for containment type, volume, and coating requirements.

9.3 Reinforced concrete or concrete masonry 2-hour rated firewalls shall be provided at transformers to the proper lengths and heights per NFPA 850.

9.4 Fireproofing: All primary and secondary beams, steel girders, steel columns, underside of metal decks and metal siding shall be fire rated where required in accordance with the requirements of local building and fire codes. The thickness of the material and application instructions shall be as recommended by the manufacturer.

9.5 Minimum Design Clearances and Access Requirements

9.5.1 Platform access, Accessways and Clearances shall be designed to comply with the industrial access criteria outlined in NFPA 101, Life Safety Code (Ch. 40), and other guidelines noted in OSHA Standards – 29 CFR. Also see SEGL-01 Platforming and Access and SEGL-02 Egress Design. Many of these requirements have been summarized in the Specification General Requirements Section GR-C – Component Access.

END OF SECTION

Appendix EE

OSBL Wire and Cable Specification

Kiewit

SPECIFICATIONS FOR
WIRE AND CABLE

93.81.03.006

GE / SOUTHERN / LINDE ADVANCED NGCC

KIEWIT PROJECT NO. 20041223

ISSUED: MARCH 2, 2023

REVISION 0 – ISSUED FOR FEED

TECHNICAL SPECIFICATIONS

TABLE OF CONTENTS

TITLE		Pages	Revision
1B	Section 1B	1B-1 – 1B-5	0
TECHNICAL REQUIREMENTS			
EDR	Engineering Design Requirements	EDR-1 – EDR-29	0

ESTIMATING SECTION 1B

1. SITE DESIGN CONDITIONS: The Site conditions to be used as design and performance criteria are as follows:

   - Main Plant Finish Grade Elevation (Mean Sea Level) : 23 feet
   - Barometric pressure: 14.7 psia
   - High Ambient Temperature: 105 ° F
   - Low Ambient Temperature: 0 ° F
   - Temperature; Indoor Ambient (Dry Bulb)
     Occupied areas (Air Conditioned) 65 ° F to 75 ° F
     Non-occupied areas (Ventilated and Heated only) 40 ° F to 100 ° F

2. UTILITIES FOR COOLED EQUIPMENT:

   - Instrument Air Pressure Range: 60 – 120 psig
   - Design temperature for air cooled equipment: 105 ° F
   - Design cooling water inlet temperature for water-cooled equipment: 86 ° F
   - Cooling Water Composition 0% propylene glycol/100% water
   - Cooling Water Design Pressure 150 psig
   - Cooling Water Pressure Drop/Temperature Rise (NTE): 10psi /20 ° F

3. STRUCTURAL:

   - Precipitation: Average rainfall: 64 inches/year
   - Design 24 hour Storm Event 25 year / 100 year: 10.3 inches / 14.0 inches
   - Design Snow Loading: 0 psf ground / 0 psf roof (ASCE 7-16)
   - Minimum Design Basic Wind Speed: 153 mph (ASCE 7-16 – Risk Category III)
   - Design Wind Load and importance factor: I_w=1.00 (ASCE 7-16)
   - Exposure: C

ESTIMATING SECTION 1B

- Seismic Loading: Seismic Importance Factor I=1.25
  Occupancy / Risk Category III
  Site Class D
  Spectral Response Accelerations S_S=0.095 g, S_1=0.059 g
  Site coefficients F_a=1.6 and F_v=2.4
  Spectral Response Coefficients S_{DS}=0.109 g, S_{D1}=0.102 g
  Seismic Design Category B
  ATC Hazards by Location (ASCE 7-16)
- Winter Design: Freeze Protection is required; Frost depth = 12”
- Design life of the Facility: 30 years

4. NOISE CONTROL:

   Near Field: The A-weighted sound pressure level resulting from the operation of equipment furnished under these specifications (including drive motors) shall not exceed a free-field average (per piece of equipment) of 85 dBA along the equipment envelope at a height of 5 feet (1.5 meters) above the ground and personnel platforms. The equipment envelope is the perimeter line that completely encompasses the equipment package (including noise control devices) at a distance of 3 feet (1 meter) from the equipment face.

   Far Field: The A-weighted sound pressure level (dBA) at 400 ft from the emission source should be provided for EPC to evaluate the overall plant noise level at the plant boundary.

5. SITE ACCESS:

   The jobsite is located at Plant Barry in Bucks, Alabama. The jobsite can be accessed from the following:

   Road: The site is accessible from Highway 43

   Rail: No site rail access.

   Barge: Barge can be transported via the Mobile River through the Mobile Bay.

6. ADDITIONAL SITE CONSIDERATIONS:

7. GENERAL DESIGN REQUIREMENTS:
   a. Asbestos-containing materials will not be allowed.

ESTIMATING SECTION 1B

b. Only proven and tested technology fo the same model or nominal size and design conditions and in successful operation for at least five years in the exact same application shall be provided. There shall be no exception to this clause.

c. For projects located in Canada, CRN certification and local province requirements shall be incorporated into the equipment and pressure piping system design.

d. Mandatory Construction and Commissioning: One complete set of parts indicated in the Seller's documentation requiring to be replaced during the Construction, Testing or Startup phases of the Project (Mandatory Construction and Commissioning Parts) shall be included in the Seller's scope. For example, manway gaskets, hydro kit gaskets, or other that are routinely replaced after inspections and tests.

e. Pump Designs:Shut-off head at design speed shall be between 115 and 140% of the maximum total dynamic head (excluding circulating water pumps).

f. All rotating components and assemblies shall be dynamically balanced in accordance with Table 1 of ISO 1940.

g. Piping Design:
   i. Unless otherwise indicated in this specification, the minimum carbon steel piping schedule for NPS 2-1/2" and larger is STD, for 2" and smaller is Schedule 80.
   ii. Unless otherwise indicated in this specification, the minimum stainless steel piping schedule for NPS 2-1/2" and larger is 10S, for 2" and smaller is Schedule 40S.
   iii. Minimum allowable resultant force at each equipment nozzle shall be 250 lbs per nominal pipe size (NPS), and the minimum allowable resultant moment at each equipment nozzle shall be 500 ft-lbs per NPS. For instance, a 4 inch nozzle shall be designed for minimum 1,000 lbs resultant force and 2,000 ft-lbs resultant moment.
   iv. For skidded and Seller provided piping, high point vents and low point drains shall be provided. Vents and drains shall normally be isolated with globe valves and gate valves respectively, in liquid service. Ball valves shall be provided for vents & drains in natural gas and air services.
   v. Corrosion Allowance: Pipe wall thickness shall be calculated using the following corrosion allowances:
      - Carbon & Low/Intermediate Alloy Steels: 0.020"
      - Creep Strength Enhanced Ferritic (CSEF) Steels – 0.060"
      - Stainless Steel and Nickel Alloys : 0.000"
   vi. Steel flanges 2-1/2 inch and larger except for grooved pipe shall be weld neck, slip-on type is permitted for class 150 only, and all steel flanges 2 inch and smaller shall be of the socket type.
   vii. Fittings for tubing shall be flareless compression type, Swagelok or Parker Type 316 stainless steel.

ESTIMATING SECTION 1B

viii. All vent and drain islolation valves and instrument root valves rated ASME Class 900 or greater shall utilize double block root valves.
ix. Valve Actuators: Gear actuators shall be used on all valve sizes greater than 6 inch, and on any valve requiring more than 75 pounds rim pull to operate the valve at the maximum differential pressure.
x. All valve bonnets for valves with design temperatures of 150F or higher shall be provided with bonnet over pressure protection.

h. Approved Vendors:
i. Steel body gate, globe, angle, and check valves shall be manufactured by Velan, Crane, Pacific Valves, Anderson Greenwood-Crosby, Edward Vogt, SPX Corporation, Fisher Controls International, or Dresser, Inc.
ii. Butterfly valves shall be manufactured by Bray, Crane, Xomox, Ebro, Amri, or Centerline.
iii. Control valves shall be manufacturered by Fisher, Valtek, Leslie, Koso, or CCI.
iv. Coupling shall be of the flexible spacer type by Falk, Zurn, or engineer approved equal.
v. Instruments shall be manufacturered by:
- Transmitters: Rosemount, Foxboro
- Level Gauges: Jerguson
- Pressure Gauges, Temperature Switches: Ashcroft
- Temperature Gauges: Ashcroft EI case style
- Pressure and Differential Pressure Switches: Ashcroft, Merriam, Midwest
- Level Switches: Magnetrol, SOR, Jerguson/Magne-Sonics
- Solenoid Valves: ASCO
- Critical Service Flow Elements:, Triad, Fluidic Technologies, PFS
- Non-Critical Service Flow Elements: Dietrich Standard, Deltabar/Midwest Instruments, Veris
- Heated Instrument Enclosure: O'Brien

i. General Weld Requirements:
- Structural steel welding shall be in accordance with the applicable AWS welding code.
- Welding of fluid-conveying, non-structural steel, piping and pressure-containing materials shall be in accordance with ASME BPVC Section IX.

8. Quality and Examination Requirements:
a. Seller and Seller's sub-suppliers shall have a Quality Management System, approved by the buyer, in accordance with ISO9001. The Seller shall provide transparent supply chain integrity for the material sources.

b. Records in accordance to referenced code shall be maintained and available for submittal to the Buyer upon request. These records include but are not limited to:
i. Material Test Reports (MTR) of base and welding materials
ii. Welding Procedure Specification (WPS) and supporting Procedure Qualification Record (PQR)

ESTIMATING SECTION 1B

iii. Heat Treatment Records
iv. Final Non Destructive Examination (NDE) reports
v. Repair records
vi. Personnel qualification records
vii. Nonconformance reports
viii. Manufacture's Data Reports (MDR)

END OF SECTION

ENGINEERING DESIGN REQUIREMENTS (EDR)

WIRE AND CABLE

The following are the cable requirements, sizes and quantities for each cable type required for this project.

1. 15kV Medium Voltage Single Conductor Power Cable – Kiewit Cable Type MV15

Description	15kV single conductor cable, Type MV-105, UL 1072 listed, suitable for use in tray, conduit, or ducts	
Conductor	Annealed bare copper Class B stranded per ASTM B8 or compact stranded per ASTM B496	
Insulation	Ethylene Propylene Rubber (EPR) per ICEA S-97-682	
Insulation Level	133%	
Jacket	Thermoplastic Chlorinated Polyethylene (CPE)	
Shielding	Strand Shield – Extruded semi-conducting material applied over the conductor	
	Insulation Shield – Extruded semi-conducting material applied over the insulation	
	Copper Shield – Bare copper tape helically wrapped with a 15% minimum overlap to provide 100% coverage	
Temperature	Normal Continuous (wet or dry)	105°C/221°F
	Emergency Overload Condition	140°C/284°F
	Short-Circuit Condition	250°C/482°F

Kiewit Cable Type Reference	Conductor Size	O.D. Max (Inches)
MV15-1C4/0	#4/0 AWG	1.29 (33mm)
MV15-1C350	350 kcmil	1.44 (37mm)
MV15-1C500	500 kcmil	1.57 (40mm)

2. 5/8kV Medium Voltage Single Conductor Power Cable – Kiewit Cable Type MV05

Description	Dual Rated 5/8kV single conductor cable, Type MV-105, UL 1072 listed, suitable for use in tray, conduit, or ducts	
Conductor	Annealed bare copper Class B stranded per ASTM B8 or compact stranded per ASTM B496	
Insulation	Ethylene Propylene Rubber (EPR) per ICEA S-97-682	
Insulation Level	115 Mils 5kV 133% / 8kV 100%	
Jacket	Thermoplastic Chlorinated Polyethylene (CPE)	
Shielding	Strand Shield – Extruded semi-conducting material applied over the conductor	
	Insulation Shield – Extruded semi-conducting material applied over the insulation	
	Copper Shield – Bare copper tape helically wrapped with a 12.5% minimum overlap to provide 100% coverage	
Temperature	Normal Continuous (wet or dry)	105°C/221°F
	Emergency Overload Condition	140°C/284°F
	Short-Circuit Condition	250°C/482°F

Kiewit Cable Type Reference	Conductor Size	O.D. Max (Inches)
MV05-1C4/0	#4/0 AWG	1.05 (27mm)
MV05-1C350	350 kcmil	1.21 (31mm)
MV05-1C500	500 kcmil	1.36 (35mm)

3. 2kV Diesel Locomotive Operation (DLO) Cable - Kiewit Cable Type PS20D

Description	2kV single conductor cable, Type RHH/RHW-2 per UL 44 fully annealed, flexible tin coated copper stranding, #14 AWG through #1111.1 kcmil (562mm), suitable for use in conduits, troughs or trays, and where superior electrical properties are desired.
Conductor	Class I, Annealed flexible tin coated Copper Conductor
Insulation	Flame-retardant, lead-free Cross-linked Ethylene Propylene (EP) with separator tape over the conductor to facilitate Stripping or Cross-Linked Polyethylene (XLPE) or Ethylene Propylene Rubber (EPR) as per AAR RP-588
Jacket	Flame-retardant, sunlight-, ozone-, abrasion-,acids-, alkalies-, and oil-resistant, lead-free Cross-linked Chlorinated polyethylene (XL-CPE) as per AAR RP-586
Temperature	Normal Continuous (Wet or dry) 90°C/194°F
Color	Black

Kiewit Cable Type Reference	Conductor Size	O.D. Max (Inches)
PS20D-1C10	#10 AWG	0.277
PS20D-1C4/0	#4/0 AWG	0.884
PS20D-1C535	#535.3 kcmil	1.220
PS20D-1C646	#646.4 kcmil	1.311
PS20D-1C777	#777.7 kcmil	1.397
PS20D-1C1111	#1111 kcmil	1.799

4. 600 Volt Single Conductor Power Cable <1/0 – Kiewit Cable Type PS06

Description	600V single conductor cable, UL 83 Thermoplastic-Insulated Wires and Cables, #14 AWG through #1 AWG, suitable for use in conduit or ducts. Utilized for lighting, receptacles, and other general power.	
Conductor	Class B, Concentric-Lay-Stranded, Annealed Copper Conductor per ASTM B8 and ASTM B3	
Insulation	THWN-2	
Temperature	Normal Continuous (wet or dry)	90°C/194°F

Kiewit Cable Type Reference	Conductor Size	O.D. Max (Inches)
PS06-1C12	#12 AWG	0.16 (4mm)
PS06-1C10	#10 AWG	0.18 (5mm)
PS06-1C8	#8 AWG	0.24 (6mm)
PS06-1C6	#6 AWG	0.28 (7mm)

5. 600 Volt Single Conductor Power Cable >=1/0 – Kiewit Cable Type PS06

Description	600V single conductor cable, UL 44 Thermoset-Insulated Wires and Cables, CT Rated #1/0 AWG through 500 kcmil, suitable for use in tray, conduit, or ducts	
Conductor	Class B, Concentric-Lay-Stranded, Annealed Copper Conductor per ASTM B8 and ASTM B3	
Insulation	Cross-Linked Polyethylene (XLPE) XHHW-2	
Temperature	Normal Continuous (wet or dry)	90°C/194°F
	Emergency Overload Condition	130°C/266°F
	Short-Circuit Condition	250°C/482°F

Kiewit Cable Type Reference	Conductor Size	O.D. Max (Inches)
PS06-1C1/0	#1/0 AWG	0.48 (12mm)
PS06-1C2/0	#2/0 AWG	0.53 (13mm)
PS06-1C4/0	#4/0 AWG	0.63 (16mm)
PS06-1C350	350 kcmil	0.80 (20mm)
PS06-1C500	500 kcmil	0.93 (24mm)

6. 600 Volt Multi-Conductor Power Cable – Kiewit Cable Type PM06

Description	600/1000V multi-conductor cable, Type TC-ER, UL 44 and ICEA S-95-658 listed, #10 AWG through #2/0 AWG with ground conductor (bare or green insulated), suitable for use in tray, conduit, or ducts	
Conductor	Class B, Concentric-Lay-Stranded, Annealed Copper Conductor per ASTM B8 and ASTM B3	
Insulation	Cross-Linked Polyethylene (XLPE) XHHW-2	
Jacket	Polyvinyl Chloride (PVC)	
Color Code	ICEA S-73-532 Method 4 – Black with printed numbers on conductors for 3 or more conductor and ICEA S-73-532 Method 1 for less than 3 conductors	
Temperature	Normal Continuous (wet or dry)	90°C/194°F
	Emergency Overload Condition	130°C/266°F
	Short-Circuit Condition	250°C/482°F

Kiewit Cable Type Reference	Conductor Size	O.D. Max (Inches)
PM06-2C12	#12 AWG	0.41 (10mm)
PM06-2C10	#10 AWG	0.455 (12mm)
PM06-3C8	#8 AWG	0.67 (17mm)
PM06-3C6	#6 AWG	0.77 (20mm)
PM06-3C4	#4 AWG	0.825 (21mm)
PM06-3C2	#2 AWG	1.00 (25mm)
PM06-3C1/0	#1/0 AWG	1.19 (30.07mm)
PM06-3C2/0	#2/0 AWG	1.28 (32.48mm)
PM06-4C8	#8 AWG	0.73 (19mm)
PM06-4C6	#6 AWG	0.89 (23mm)
PM06-4C4	#4 AWG	0.95 (24mm)
PM06-4C2	#2 AWG	1.095 (28mm)

7. 600 Volt Ground Cable – Kiewit Cable Type GN06

Description	600V single grounding conductor cable, UL 44 and ICEA S-95-658 listed, CT Rated for 1/0 and Larger, suitable for use in tray, conduit, or ducts
Conductor	Class B, Concentric-Lay-Stranded, Annealed Copper Conductor per ASTM B8 and ASTM B3
Insulation	Cross-Linked Polyethylene (XLPE) XHHW-2
Color	Green
Temperature	Normal Continuous (wet or dry) 90°C/194°F

Kiewit Cable Type Reference	Conductor Size	O.D. Max (Inches)
GN06-1C10	10 AWG	0.18 (5mm)
GN06-1C8	8 AWG	0.24 (6mm)
GN06-1C2	2 AWG	0.39 (10mm)
GN06-1C2/0	2/0 AWG	0.53 (13mm)
GN06-1C4/0	4/0 AWG	0.63 (16mm)

8. 600 Volt Control Cable – Kiewit Cable Type CN06

Description	600/1000V multi-conductor control cable, Type TC-ER, UL 44 listed and ICEA S-73-532, #14 AWG through #10 AWG, suitable for use in cable tray, conduit, or ducts	
Conductor	Class B, Concentric-Lay-Stranded, Annealed Copper Conductor per ASTM B8 and ASTM B3	
Insulation	Cross-Linked Polyethylene (XLPE) XHHW-2	
Jacket	Polyvinyl Chloride (PVC)	
Color Code	ICEA S-73-532 Method 1, Table E-2	
Temperature	Normal Continuous (wet or dry)	90°C/194°F
	Emergency Overload Condition	130°C/266°F
	Short-Circuit Condition	250°C/482°F

Kiewit Cable Type Reference	Conductor Size	O.D. Max (Inches)
CN06-4C10	#10 AWG	0.56 (14mm)
CN06-3C12	#12 AWG	0.44 (11mm)
CN06-4C12	#12 AWG	0.475 (12mm)
CN06-3C14	#14 AWG	0.41 (10mm)
CN06-5C14	#14 AWG	0.47 (12mm)
CN06-7C14	#14 AWG	0.59 (15mm)
CN06-9C14	#14 AWG	0.62 (16mm)
CN06-12C14	#14 AWG	0.69 (18mm)
CN06-19C14	#14 AWG	0.81 (21mm)
CN06-25C14	#14 AWG	0.96 (25mm)

9. 600 Volt Shielded Control Cable – Kiewit Cable Type CS06

Description	600V multi-conductor control cable type TC-ER, UL 44 listed, #14 AWG through #10 AWG, suitable for use in cable tray, conduit, or ducts
Conductor	Class B, Concentric-Lay-Stranded, Annealed Copper Conductor per ASTM B8 and ASTM B3
Insulation	Flame Retardant Cross-Linked Polyethylene (FR-XLPE) XHHW-2
Jacket	Polyvinyl Chloride (PVC)
Shield	Longitudinal Corrugated Copper Tape
Color Code	ICEA S-73-532 Method 1, Table E-2
Temperature	Normal Continuous (wet or dry) 90°C/194°F

Kiewit Cable Type Reference	Conductor Size	O.D. Max (Inches)
CS06-4C10	#10 AWG	0.546 (14mm)
CS06-4C12	#12 AWG	0.459 (12mm)
CS06-3C14	#14 AWG	0.384 (10mm)
CS06-5C14	#14 AWG	0.454 (12mm)
CS06-9C14	#14 AWG	0.6018 (15mm)
CS06-12C14	#14 AWG	0.673 (17mm)

10. 600 Volt Twisted-Shielded Pair & Triad Instrument Cable – Kiewit Cable Type LS06

Description	600V single/multiple pair and triad instrumentation cable, TC-ER (UL 1277 listed), #16 AWG, suitable for use in cable tray, conduit, or ducts
Conductor	Class B, Concentric-Lay-Stranded, Annealed Copper Conductor per ASTM B8 and ASTM B3
Insulation	Cross-Linked Polyethylene (XLPE) or Ethylene Propylene Rubber (EPR)
Cable Shield	Each pair or triad configuration to be enclosed by an aluminum/Mylar tape shield helically wrapped with a minimum lap of 15% of tape width. A minimum #20 gauge tinned copper drain wire shall be helically wound between twisted conductors and tape shield. Entire cable assembly shall have an overall aluminum/Mylar tape shield with #20 gauge tinned copper drain wire. For single pair and single triad cables only an overall shied shall be applied.
Jacket	Chlorinated Polyethylene (CPE) or Low Smoke Zero Halogen (LSZH)
Color	Twisted Pair - Black, White with each pair sequentially numbered Triad - Black, White, Red with each triad sequentially numbered
Temperature	Normal Continuous (wet or dry) 90°C/194°F

Kiewit Cable Type Reference	Conductor Size	O.D. Max (Inches)
LS06-1P16	#16 AWG	0.33 (8mm)
LS06-2P16	#16 AWG	0.58 (15mm)
LS06-4P16	#16 AWG	0.67 (17mm)
LS06-8P16	#16 AWG	0.90 (23mm)
LS06-1T16	#16 AWG	0.357 (9mm)
LS06-2T16	#16 AWG	0.64 (16mm)
LS06-4T16	#16 AWG	0.74 (19mm)
LS06-8T16	#16 AWG	0.96 (24mm)

11. 300V Type K Thermocouple Extension Cable – Kiewit Cable Type KX03

Description	300V single/multiple pair Type K thermocouple extension cable, Type PLTC (UL 13 listed), #20 AWG through #16 AWG, suitable for use in cable tray, conduit, or ducts
Conductor	Annealed solid alloy Chromel/Alumel per ANSI MC96.1, ASA/ISA
Insulation	Polyvinyl Chloride (PVC)
Cable Shield	Each pair or triad configuration to be enclosed by an aluminum/Mylar tape shield helically wrapped with a minimum lap of 15% of tape width. A minimum #20 gauge tinned copper drain wire shall be helically wound between twisted conductors and tape shield. Entire cable assembly shall have an overall aluminum/Mylar tape shield helically wrapped with a minimum lap of 15% of tape width with #20 gauge tinned copper drain wire. Individual pair or triad shields shall be fully isolated from each other and the overall shield.
Jacket	Polyvinyl Chloride (PVC)
Color	Yellow, Red
Temperature	Normal Continuous (wet or dry) 105°C/221°F

Kiewit Cable Type Reference	Conductor Size	O.D. Max (Inches)
KX03-1P16	#16 AWG	0.28 (7mm)
KX03-2P20	#20 AWG	0.40 (10mm)
KX03-4P20	#20 AWG	0.475 (12mm)
KX03-8P20	#20 AWG	0.58 (15mm)

12. 600V Type K Thermocouple Extension Cable – Kiewit Cable Type KX06

Description	600V single/multiple pair Type K thermocouple extension cable, Type TC (UL 44 listed), #20 through #16 AWG, suitable for use in cable tray, conduit, or ducts
Conductor	Annealed solid alloy Chromel/Alumel per ANSI MC96.1, ASA/ISA
Insulation	Flame-retardant Ethylene Propylene (FR-EP)
Cable Shield	Each pair or triad configuration to be enclosed by an aluminum/Mylar tape shield helically wrapped with a minimum lap of 15% of tape width. A minimum #18 gauge tinned copper drain wire shall be helically wound between twisted conductors and tape shield. Entire cable assembly shall have an overall aluminum/Mylar tape shield helically wrapped with a minimum lap of 15% of tape width with #18 gauge tinned copper drain wire. Individual pair or triad shields shall be fully isolated from each other and the overall shield.
Jacket	Chlorinated Polyethylene (CPE)
Color	Yellow, Red
Temperature	Normal Continuous (wet or dry) 90°C/194°F

Kiewit Cable Type Reference	Conductor Size	O.D. Max (Inches)
KX06-1P16	#16 AWG	0.30 (8mm)
KX06-2P20	#20 AWG	0.44 (11mm)
KX06-4P20	#20 AWG	0.55 (14mm)
KX06-8P20	#20 AWG	0.66 (17mm)

13. Plenum Rated Multi-Mode Fiber Optic Cable – Kiewit Cable Type FOMM

Description	Six (6), twelve (12) or twenty-four (24) fiber, tested per ICEA S-104-696. Type OFNP for Plenum, di-electric, tight buffered, UL 1651 listed suitable for use in plenums, conduit, or ducts.
Fiber	62.5 µm (OM1)
Assembly	Tight-buffered color-coded fibers with water-swellable strength members and central strength member
Jacket	Overall Indoor/Outdoor UV-resistant, moisture-resistant, flame-retardant
Fiber Color	Blue, Orange, Green, Brown, Slate, White, Red, Black, Yellow, Violet, Rose, Aqua

Kiewit Cable Type Reference	Fiber Size	O.D. Max (Inches)
FOMM-6F625	62.5 µm	0.21 (5mm)
FOMM-12F625	62.5 µm	0.25 (6mm)
FOMM-24F625	62.5 µm	0.31 (8mm)

14. Plenum Rated Single-Mode Fiber Optic Cable - Kiewit Cable Type FOSM

Description	Six (6), twelve (12), twenty-four (24), or forty-eight (48) fiber, tested per ICEA S-104-696. Type OFNP for Plenum, di-electric, loose tube, single-mode, UL 1651 listed, UV resistant, ozone resistant, fire retardant, suitable for wet and dry locations suitable for use in plenums, conduit, or ducts.
Fiber	8.2 µm (OS2)
Assembly	Loose tube color coded fibers with water-swellable strength members and central strength member with water-blocking tape, gel free with a single jacket
Jacket	Overall UV-resistant, moisture resistant, flame-retardant, and low smoke - Black
Color	Blue, Orange, Green, Brown, Slate, White, Red, Black, Yellow, Violet, Rose, Aqua

Kiewit Cable Type Reference	Fiber Size	O.D. Max (Inches)
FOSM-6F82	8.2 µm	0.29 (7mm)
FOSM-12F82	8.2 µm	0.29 (7mm)
FOSM-24F82	8.2 µm	0.45 (11mm)
FOSM-48F82	8.2 µm	0.45 (11mm)

15. Armored Fiber Optic Cable (Multi-Mode)– Kiewit Cable Type FOMMA

Description	Six (6), twelve (12) or twenty-four (24) fiber, tested per ICEA S-104-696. Type OFCP for Plenum, di-electric, tight buffered, UL 1651 listed, suitable for use in plenums, conduit, or ducts.
Fiber	62.5 µm (OM1)
Assembly	Tight-buffered for 6 fiber and loose tube for 12, 24 fiber with color-coded fibers with water-swellable strength members
Jacket	Overall Indoor/Outdoor UV-resistant, moisture-resistant, flame-retardant
Armor	Aluminum Interlocked Armor (AIA)
Fiber Color	Blue, Orange, Green, Brown, Slate, White, Red, Black, Yellow, Violet, Rose, Aqua

Kiewit Cable Type Reference	Fiber Size	O.D. Max (Inches)
FOMMA-6F625	62.5 µm	0.44 (11mm)
FOMMA-12F625	62.5 µm	0.56 (14mm)
FOMMA-24F625	62.5 µm	0.68 (17mm)

16. Armored Fiber Optic Cable (Single-Mode)– Kiewit Cable Type FOSMA

Description	Six (6), twelve (12), twenty-four (24), or forty-eight (48) fiber, tested per ICEA S-104-696. Type OFCP for Plenum, di-electric, loose tube, single-mode, UL 1651 listed, UV resistant, fire retardant, suitable for wet and dry locations suitable for use in plenums, conduit, or ducts.
Fiber	8.2 µm (OS2)
Assembly	Tight-buffered for 6 fiber and loose tube color coded 12, 24, and 48 fiber with water-swellable strength members and central strength member with water-blocking tape
Jacket	Overall UV-resistant, moisture resistant, flame-retardant - Black
Armor	Aluminum Interlocked Armor (AIA)
Color	Blue, Orange, Green, Brown, Slate, White, Red, Black, Yellow, Violet, Rose, Aqua

Kiewit Cable Type Reference	Fiber Size	O.D. Max (Inches)
FOSMA-6F82	8.2 µm	0.44 (11mm)
FOSMA-12F82	8.2 µm	0.56 (14mm)
FOSMA-24F82	8.2 µm	0.68 (17mm)
FOSMA-48F82	8.2 µm	0.68 (17mm)

17. Fiber Optic Patch Cable (Multi-Mode)– Kiewit Cable Type FOMMP

Description: Fiber Jumpers Type OFNR for Riser, tight buffered, simplex, duplex, or trunk

Fiber: 62.5 µm (OM1)

Jacket: Riser (OFNR)

Kiewit Cable Type Reference	Fiber Size	Connector Type End A	Connector Type End B	Length
FOMMP-1F625	62.5 µm	See IC Drawings	See IC Drawings	See IC Drawings
FOMMP-2F625	62.5 µm	See IC Drawings	See IC Drawings	See IC Drawings

18. Fiber Optic Patch Cable (Single-Mode)– Kiewit Cable Type FOSMP

Description: Fiber Jumpers Type OFNR for Riser, tight buffered, simplex, duplex, or trunk

Fiber: 8.2 µm (OS2)

Jacket: Riser (OFNR)

Kiewit Cable Type Reference	Fiber Size	Connector Type End A	Connector Type End B	Length
FOSMP-1F82	8.2 µm	See IC Drawings	See IC Drawings	See IC Drawings
FOSMP-2F82	8.2 µm	See IC Drawings	See IC Drawings	See IC Drawings

19. Multi-Conductor – Profibus DP Databus Cable KIEWIT Cable Type LS06PB

Description	600 V single/multiple pair databus cable, Type PLTC, UL 13 and UL AWM 20201 listed, 22 AWG suitable for use with indoor/outdoor cable tray, conduits or ducts.
Conductor	Tinned Copper
Insulation	Cross-Linked Polyethylene (XLPE), Flame retardant Foam, Polyethylene (FRFPE), or Polyolefin (PO)
Cable Shield	Tinned copper with Aluminum Foil-Polyester Tape
Jacket	PVC
Color	Purple
Temperature	Normal Continuous (wet or dry) -30 to 75°C(-22 to 167 °F) per UL AWM 20201

Part Number	Cable Type Reference	Conductor Size	O.D. Max (Inches)
Belden 3079A or Equal	LS06PB-1P22	22 AWG	0.315 (8mm)

CAN-BUS Data Network Cable – Kiewit Cable Type CO03CB

Description	CAN-BUS single pair cable, Type PLTC (UL 13 listed), UV resistant, ozone resistant, fire retardant, suitable for wet and dry locations, suitable for use in tray, conduit, or ducts. Must meet SAE J1939/11
Conductor	Class B, Concentric-Lay-Stranded, Annealed Copper Conductor per ASTM B8 and ASTM B33
Insulation	Thermoplastic Heat and Water-resistant Nylon-Coated (THWN-2) or Cross-Linked Polyethylene
Shield	Each pair or triad configuration to be enclosed by an aluminum tape shield helically wrapped with a minimum lap of 15% of tape width. A minimum #18 gauge tinned copper drain wire shall be helically wound between twisted conductors and tape shield. Entire cable assembly shall have an overall aluminum tape shield with #18 gauge tinned copper drain wire. Individual pair or triad shields shall be fully isolated from each other and the overall shield.
Jacket	PVC (Polyvinyl chloride)
Color	Green, Yellow
Temperature	Normal Continuous (wet or dry) 60°C/140°F

Part Number	Cable Type Reference	Application	O.D. Max (Inches)
Belden 3105A or Equal	CO03CB-1P22	22 AWG	0.281 (7mm)

20. RG-58A/U Coaxial Cable – Kiewit Cable Type COAX58

Description RG-58A/U type, 20 AWG stranded, .037" tinned copper conductor

Insulation Polyethylene Foam (PE)

Shield Tinned Copper braid shield, minimum 93% coverage

Jacket Polyvinyl Chloride (PVC)

Kiewit Cable Type Reference	Application	O.D. Max (Inches)	Model Number
COAX58-1C20	RG-58A/U	0.193 (5mm)	Belden 8219 Coax or Equal

21. RS-485 – Kiewit Cable Type CORS4

Description	RS-485 applications, 22 AWG multipair stranded tinned copper conductor, Type PLTC (UL 13 listed)
Insulation	Polyethylene Foam (PE)
Shield	Overall, Bi-laminate (Alum+Poly) + Tinned Copper (TC)
Jacket	Overall UV-resistant, rated for dry and wet locations, PVC
Color	Green, Yellow
Temperature	Normal Continuous -20° to 60°C(-4 to 140°F)

Kiewit Cable Type Reference	# of Pairs	Conductor Size	O.D. Max (Inches)
CORS4-2P22	2	22 AWG	0.350 (9mm)

22. Category 6 Unshielded – Kiewit Cable Type CAT6/6A

Description	Bonded-Pairs, Solid Bare Annealed Copper
Insulation	PO - Polyolefin
Shield	Unshielded
Jacket	Overall UV-resistant, rated for dry and wet locations, Polyvinyl Chloride (PVC)

Part Number	Cable Type Reference	# of Pairs	Conductor Size	O.D. Max (Inches)
Belden 2146A or Equal	CAT6-4P22	4	22 AWG	0.255 (6.48mm)
Belden 2148A or Equal	CAT6A-4P23	4	23 AWG	0.300 (7.62 mm)

23. Telephone Cable – Kiewit Cable Type TP

Description	24 AWG, Solid Bare Annealed Copper
Insulation	Plenum-Rated Fluorinated Ethylene Propylene (FEP) or Polypropylene
Shield	Unshielded
Jacket	Low Smoke Zero Halogen (LSZH)

Part Number	Cable Type Reference	Application
Belden 2139A or Equal	TP-25P24	Unshielded 25 Twisted Pairs

24. Multiconductor Fire Protection Cable – Kiewit Cable Type FP03

Description	300V multiconductor fire protection cable, Type FPLP, UL listed, #18 through #14 suitable for use in plenums, cable tray, and ducts
Conductor	Solid Copper Conductor
Insulation	Low Smoke Polyvinyl Chloride (LS-PVC)
Jacket	Low Smoke Polyvinyl Chloride (LS-PVC)
Color	Black, Red
Temperature	Normal Continuous (wet or dry) 75°C/167°F

Kiewit Cable Type Reference	Conductor Size	O.D. Max (Inches)	Use Case	Model
FP03-2C14	#14 AWG	0.194 (5mm)	Plenums Only	Coleman 81402 or Equal
FP03-2C16	#16 AWG	0.162 (4.2mm)	Plenums Only	Coleman 81602 or Equal
FP03-2C18	#18 AWG	0.132 (3mm)	Plenums Only	Coleman 81802 or Equal
FP03DB-2C14	#14 AWG	0.310 (7.9mm)	Plenum, Tray, Duct Bank	West Penn AQ226 or Equal
FPDB03-2C16	#16 AWG	0.295 (7.5mm)	Plenum, Tray, Duct Bank	West Penn AQ225 or Equal
FPDB03-2C18	#18 AWG	0.270 (6.9mm)	Plenum, Tray, Duct Bank	West Penn AQ224 or Equal

25. 600 Volt Variable Frequency Drive (VFD) Cable – Kiewit Cable Type PM06V

Description	600V multi-conductor cable 1000V withstand minimum, Type TC-ER, UL 44suitable for use in tray, conduit, or ducts
Conductor	Class B, Rope-Lay-Stranded with Concentric Stranded Members, Annealed Copper Conductor per ASTM B8
Insulation	Cross-Linked Polyethylene (XLPE)
Ground	3 symmetrically placed annealed tinned copper conductors in direct contact with shield. Class B stranding be ASTM B8
Jacket	Polyvinyl Chloride (PVC)
Shield	Overall tinned copper braided shield in conjunction with an aluminum/polymer or copper/polymer tape shield
Color Code	ICEA S-73-532 Method 4 – Black with printed numbers on conductors
Temperature	Normal Continuous (wet or dry) 90°C/194°F

Kiewit Cable Type Reference	Conductor Size	O.D. Max (Inches)
PM06V-3C8	#8 AWG	0.931 (24mm)
PM06V-3C6	#6 AWG	1.028 (26mm)
PM06V-3C4	#4 AWG	1.163 (30mm)
PM06V-3C2	#2 AWG	1.314 (33mm)

26. 600 Volt Metal Clad Cable – Kiewit Cable Type PM06A

Description	600V multi-conductor cable, Type MC, UL 44 and ICEA S-95-658 listed, #12 AWG through #2 AWG with ground conductor (bare or green insulated), suitable for use in tray, conduit, or ducts
Conductor	Class B, Concentric-Lay-Stranded with Concentric Stranded Members, Annealed Copper Conductor per ASTM B8 and ASTM B3
Insulation	Cross-Linked Polyethylene (XLPE) XHHW-2
Jacket	Polyvinyl Chloride (PVC)
Armor	Aluminum Interlocked Armor (AIA)
Color Code	ICEA S-73-532 Method 4 – Black with printed numbers on conductors for #8 AWG or larger and ICEA S-73-532 Method 1 – Different color insulation with tracers for #12-10 AWG
Temperature	Normal Continuous (wet or dry) 90°C/194°F

Kiewit Cable Type Reference	Conductor Size	O.D. Max (Inches)
PM06A-3C12	#12 AWG	0.66 (17mm)
PM06A-3C10	#10 AWG	0.721 (18mm)
PM06A-3C8	#8 AWG	0.91 (23mm)
PM06A-3C6	#6 AWG	1.13 (29mm)
PM06A-3C4	#4 AWG	1.29 (33mm)
PM06A-3C2	#2 AWG	1.40 (36mm)

27. 600 Volt Type K Thermocouple Cable High Temperature Extension Cable – Kiewit Cable Type KX06H

Description	600V single/multiple pair Type K high temperature thermocouple extension cable, Type TC (UL1277 Listed), #18 AWG, suitable for use in cable tray, conduit, or ducts
Conductor	#18 AWG Bare "Type KX" Solid Conductors
Insulation	Fluorinated Ethylene Propylene (FEP)
Cable Shield	Individual BELDFOIL Shields with #20 AWG Drains. Overall BELDFOIL Shield with #18 AWG Drain with filler as required.
Jacket	Fluorinated Ethylene Propylene (FEP) – Sun Resistant
Color Code	Yellow, Red
Temperature	Normal Continuous (Dry) -70°C to 200°C(-94 to 392°F)

Kiewit Cable Type Reference	Conductor Size	O.D. Max (Inches)
KX06H-1P18	#18 AWG	0.28 (7mm)
KX06H-2P18	#18 AWG	0.44 (11mm)

28. 600 Volt High Temperature Twisted-Shielded Pair Instrument Cable – Kiewit Cable Type LS06H

Description	600V single pair instrumentation cable, TC-ER (UL 1277 listed), #16 AWG, suitable for use in cable tray, conduit, or ducts
Conductor	2 #16 AWG conductors. Stranded with 7 TPC Strands.
Insulation	TEFZEL
Cable Shield	Aluminum Poly shield with #18 AWG drain wire.
Jacket	TEFZEL
Color	Twisted Pair - Black, White
Temperature	Normal Continuous (wet or dry) 150°C/302°F

Kiewit Cable Type Reference	Conductor Size	O.D. Max (Inches)
LS06H-1P16	#16 AWG	0.245 (6mm)

END OF SECTION

Appendix FF

OSBL DC System Specification

Kiewit

SPECIFICATIONS FOR
DC SYSTEM

94.03.06.100

GE / SOUTHERN / LINDE ADVANCED NGCC

KIEWIT PROJECT NO. 20041223

ISSUED: MAY 5, 2023

REVISION 0 – ISSUED FOR FEED

TECHNICAL SPECIFICATIONS

TABLE OF CONTENTS

TITLE		Pages	Revision
1B	Section 1B	1B-1 – 1B-5	0
1E	DC System Specification	1E-1 – 1E-2	0
TECHNICAL REQUIREMENTS			
APPENDIX A	DC One-Lines	1 page	0
GENERAL REQUIREMENTS			
E2	Seller Furnished Controls and Wiring	E2-1 – E2-12	
E3	Valve Motor Operators	E3-1 – E3-3	
S1	Structural Loading and Design	S1-1 – S1-10	
S2	Structural Steel Fabrication and Supply	S2-1 – S2-18	

ESTIMATING SECTION 1B

1. SITE DESIGN CONDITIONS: The Site conditions to be used as design and performance criteria are as follows:

   - Main Plant Finish Grade Elevation (Mean Sea Level) : 23 feet
   - Barometric pressure: 14.7 psia
   - High Ambient Temperature: 105 ° F
   - Low Ambient Temperature: 0 ° F
   - Temperature; Indoor Ambient (Dry Bulb)
     Occupied areas (Air Conditioned) 65 ° F to 75 ° F
     Non-occupied areas (Ventilated and Heated only) 40 ° F to 100 ° F

2. UTILITIES FOR COOLED EQUIPMENT:

   - Instrument Air Pressure Range: 60 – 120 psig
   - Design temperature for air cooled equipment: 105 ° F
   - Design cooling water inlet temperature for water-cooled equipment: 86 ° F
   - Cooling Water Composition 0% propylene glycol/100% water
   - Cooling Water Design Pressure 150 psig
   - Cooling Water Pressure Drop/Temperature Rise (NTE): 10psi /20 ° F

3. STRUCTURAL:

   - Precipitation: Average rainfall: 64 inches/year
   - Design 24 hour Storm Event 25 year / 100 year: 10.3 inches / 14.0 inches
   - Design Snow Loading: 0 psf ground / 0 psf roof (ASCE 7-16)
   - Minimum Design Basic Wind Speed: 153 mph (ASCE 7-16 – Risk Category III)
   - Design Wind Load and importance factor: I_w=1.00 (ASCE 7-16)
   - Exposure: C

ESTIMATING SECTION 1B

- Seismic Loading: Seismic Importance Factor I=1.25
  Occupancy / Risk Category III
  Site Class D
  Spectral Response Accelerations S_S=0.095 g, S_1=0.059 g
  Site coefficients F_a=1.6 and F_v=2.4
  Spectral Response Coefficients S_{DS}=0.109 g, S_{D1}=0.102 g
  Seismic Design Category B
  ATC Hazards by Location (ASCE 7-16)
- Winter Design: Freeze Protection is required; Frost depth = 12”
- Design life of the Facility: 30 years

4. NOISE CONTROL:

   Near Field: The A-weighted sound pressure level resulting from the operation of equipment furnished under these specifications (including drive motors) shall not exceed a free-field average (per piece of equipment) of 85 dBA along the equipment envelope at a height of 5 feet (1.5 meters) above the ground and personnel platforms. The equipment envelope is the perimeter line that completely encompasses the equipment package (including noise control devices) at a distance of 3 feet (1 meter) from the equipment face.

   Far Field: The A-weighted sound pressure level (dBA) at 400 ft from the emission source should be provided for EPC to evaluate the overall plant noise level at the plant boundary.

5. SITE ACCESS:

   The jobsite is located at Plant Barry in Bucks, Alabama. The jobsite can be accessed from the following:

   Road: The site is accessible from Highway 43

   Rail: No site rail access.

   Barge: Barge can be transported via the Mobile River through the Mobile Bay.

6. ADDITIONAL SITE CONSIDERATIONS:

7. GENERAL DESIGN REQUIREMENTS:
   a. Asbestos-containing materials will not be allowed.

ESTIMATING SECTION 1B

b. Only proven and tested technology fo the same model or nominal size and design conditions and in successful operation for at least five years in the exact same application shall be provided. There shall be no exception to this clause.

c. For projects located in Canada, CRN certification and local province requirements shall be incorporated into the equipment and pressure piping system design.

d. Mandatory Construction and Commissioning: One complete set of parts indicated in the Seller's documentation requiring to be replaced during the Construction, Testing or Startup phases of the Project (Mandatory Construction and Commissioning Parts) shall be included in the Seller's scope. For example, manway gaskets, hydro kit gaskets, or other that are routinely replaced after inspections and tests.

e. Pump Designs:Shut-off head at design speed shall be between 115 and 140% of the maximum total dynamic head (excluding circulating water pumps).

f. All rotating components and assemblies shall be dynamically balanced in accordance with Table 1 of ISO 1940.

g. Piping Design:
   i. Unless otherwise indicated in this specification, the minimum carbon steel piping schedule for NPS 2-1/2" and larger is STD, for 2" and smaller is Schedule 80.
   ii. Unless otherwise indicated in this specification, the minimum stainless steel piping schedule for NPS 2-1/2" and larger is 10S, for 2" and smaller is Schedule 40S.
   iii. Minimum allowable resultant force at each equipment nozzle shall be 250 lbs per nominal pipe size (NPS), and the minimum allowable resultant moment at each equipment nozzle shall be 500 ft-lbs per NPS. For instance, a 4 inch nozzle shall be designed for minimum 1,000 lbs resultant force and 2,000 ft-lbs resultant moment.
   iv. For skidded and Seller provided piping, high point vents and low point drains shall be provided. Vents and drains shall normally be isolated with globe valves and gate valves respectively, in liquid service. Ball valves shall be provided for vents & drains in natural gas and air services.
   v. Corrosion Allowance: Pipe wall thickness shall be calculated using the following corrosion allowances:
      - Carbon & Low/Intermediate Alloy Steels: 0.020"
      - Creep Strength Enhanced Ferritic (CSEF) Steels – 0.060"
      - Stainless Steel and Nickel Alloys : 0.000"
   vi. Steel flanges 2-1/2 inch and larger except for grooved pipe shall be weld neck, slip-on type is permitted for class 150 only, and all steel flanges 2 inch and smaller shall be of the socket type.
   vii. Fittings for tubing shall be flareless compression type, Swagelok or Parker Type 316 stainless steel.

ESTIMATING SECTION 1B

viii. All vent and drain islolation valves and instrument root valves rated ASME Class 900 or greater shall utilize double block root valves.
ix. Valve Actuators: Gear actuators shall be used on all valve sizes greater than 6 inch, and on any valve requiring more than 75 pounds rim pull to operate the valve at the maximum differential pressure.
x. All valve bonnets for valves with design temperatures of 150F or higher shall be provided with bonnet over pressure protection.

h. Approved Vendors:
i. Steel body gate, globe, angle, and check valves shall be manufactured by Velan, Crane, Pacific Valves, Anderson Greenwood-Crosby, Edward Vogt, SPX Corporation, Fisher Controls International, or Dresser, Inc.
ii. Butterfly valves shall be manufactured by Bray, Crane, Xomox, Ebro, Amri, or Centerline.
iii. Control valves shall be manufacturered by Fisher, Valtek, Leslie, Koso, or CCI.
iv. Coupling shall be of the flexible spacer type by Falk, Zurn, or engineer approved equal.
v. Instruments shall be manufacturered by:
- Transmitters: Rosemount, Foxboro
- Level Gauges: Jerguson
- Pressure Gauges, Temperature Switches: Ashcroft
- Temperature Gauges: Ashcroft EI case style
- Pressure and Differential Pressure Switches: Ashcroft, Merriam, Midwest
- Level Switches: Magnetrol, SOR, Jerguson/Magne-Sonics
- Solenoid Valves: ASCO
- Critical Service Flow Elements:, Triad, Fluidic Technologies, PFS
- Non-Critical Service Flow Elements: Dietrich Standard, Deltabar/Midwest Instruments, Veris
- Heated Instrument Enclosure: O'Brien

i. General Weld Requirements:
- Structural steel welding shall be in accordance with the applicable AWS welding code.
- Welding of fluid-conveying, non-structural steel, piping and pressure-containing materials shall be in accordance with ASME BPVC Section IX.

8. Quality and Examination Requirements:
a. Seller and Seller's sub-suppliers shall have a Quality Management System, approved by the buyer, in accordance with ISO9001. The Seller shall provide transparent supply chain integrity for the material sources.

b. Records in accordance to referenced code shall be maintained and available for submittal to the Buyer upon request. These records include but are not limited to:
i. Material Test Reports (MTR) of base and welding materials
ii. Welding Procedure Specification (WPS) and supporting Procedure Qualification Record (PQR)

ESTIMATING SECTION 1B

iii. Heat Treatment Records
iv. Final Non Destructive Examination (NDE) reports
v. Repair records
vi. Personnel qualification records
vii. Nonconformance reports
viii. Manufacture's Data Reports (MDR)

END OF SECTION

Project: GE/Southern/Linde Advanced NGCC Integration
Kiewit #: 20041223
Revision: 0

TECHNICAL SPECIFICATION 94.03.06.100
Battery and Chargers

Item	Description	Specified Data	By Bidder	See Note	Rev. #
	Specification Summary				
	This specification covers the design, fabrication, testing and delivery of a 125 VDC Station Battery system in accordance with this specification and stated Standards.				
1	**DC System General Requirements**				
1.01	Nominal Voltage, Volts DC, ungrounded	**125**			
1.02	Equalize Charging Voltage, Volts DC	**140**			
1.03	Float Charging Voltage, Volts DC	**135**			
1.04	Minimum End-of-Discharge Voltage, Volts DC	**105**			
2	**Battery**				
2.01	Number of Cells	**60**			
2.02	Cell Type	**Flooded Lead-Calcium**			
2.03	Electrolyte Specific Gravity @ 77°F, Cell Fully Charged	**1.215**			
2.04	Battery Duty Cycle				
2.05	Period 1				
2.06	Duration (minutes)	**1**			
2.07	Load (Amps)	**441**			
2.08	Period 2				
2.09	Duration (minutes)	**29**			
2.10	Load (Amps)	**323**			
2.11	Period 3				
2.12	Duration (minutes)	**30**			
2.13	Load (Amps)	**323**			
2.14	Period 4				
2.15	Duration (minutes)	**30**			
2.16	Load (Amps)	**323**			
2.17	Period 5				
2.18	Duration (minutes)	**29**			
2.19	Load (Amps)	**323**			
2.20	Period 6				
2.21	Duration (minutes)	**1**			
2.22	Load (Amps)	**489**			
2.23	Battery Service Life, Years	**20**			
2.24	Age Compensation Factor	**1.25**			
2.25	Installation Location Average Ambient Temperature (°F)	**77**			
2.26	Temperature Compensation Factor	**1.011**			
2.27	Design Margin	**10% (Already included in profile)**			
3	**Battery Chargers**				
3.01	Number of 100% Capacity Chargers	**2**			
3.02	Maximum Recharge Time				
3.03	With one charger	**24**			
3.04	With two chargers	**24**			
3.05	Input Voltage, VAC, three-phase	**480**			
3.06	Input Circuit Breaker Short-Circuit Rating	**65kA symmetrical rms**			
3.07	Normal Expected Continuous Load (Amps)	**344**			
3.08	Capable of Operation Disconnected From Battery (Battery Eliminator)	**Yes**			
3.09	Minimum Efficiency	**90%**			
3.10	Switch Selectable Charging Voltage, Float/Equalize	**Yes**			
3.11	Output Voltage Adjustment, Float or Equalize	**+/-5%**			
3.12	Output Voltage Regulation (+/-10% input volts, +/-5% frequency)	**+/-1%**			
3.13	Current Limit of Full Load Current	**125%**			
3.14	Ripple, % RMS	**<2%**			
3.15	Charger DC Output, 2-pole Circuit Breaker	**Required**			
3.16	Equalizing Timer on Panel Front, 0-100 Hours, Manual Start	**Required**			
3.17	Float and Equalize Voltage Potentiometers	**Required**			
3.18	DC Ground Detection Relay, 10k ohm Sensitivity	**Required**			
3.19	Input AC Voltmeter, Output DC Voltmeter and Ammeter, 2% Accuracy	**Required**			
3.20	Charger Enclosure Color	**ANSI 61 Gray**			
3.21	Charger Enclosure Rating	**NEMA 1**			
4	**Battery Rack and Accessories**				
4.01	Rack Configuration	**2-Tier**			
4.02	Rack Fabrication Material	**Steel**			
4.03	All Cell Interconnecting Hardware, incl. links, inter-step connectors, plates	**Required**			
4.04	One Hydrometer	**Required**			
4.05	One Thermometer	**Required**			
4.06	One Cell Lifting Strap and Spreader	**Required**			
4.07	Four 16 oz. Cans of NO-OX-ID "A" Grease	**Required**			
4.08	One Lot Adhesive Cell Numbers	**Required**			
4.09	One battery room safety kit, w/ goggles, emergency eye wash, soda, gloves, apron, polycarbonate face shield, etc.	**Required**			
4.10	One lot necessary wrenches for cell hardware	**Required**			
4.11	One DC rated 2-pole non-fused battery disconnect in indoor rated NEMA 1 enclosure for battery isolation	**Required**			
4.12	Two DC rated 2-pole non-fused 400A disconnects in outdoor NEMA 4 enclosures	**Required**			
4.13	Stainless Steel Spill Containment System	**Required**			
4.14	Battery Monitoring System (BMS)	**Not Required**			

4.15	Measurements: battery voltage, string currents, cell/block voltages, ambient and battery temperatures, cell/string impedance		
4.16	Calculates: discharge time remaining, depth of discharge, and performance index		
4.17	Logs: battery discharges, alarms, events, daily max and mins		
4.18	Features: expandable architecture, accommodate min of 62 cells, function keys with keypad, LCD display, network port		
5	**DC Power Panel(s)/Switchboard(s)**		
5.01	Quantity	**4**	
5.02	Bus Rating (MLO), Amps (Ungrounded Supply)	**See One-Line**	
5.03	Short-Circuit Capability	**As Required+10% Margin**	
5.04	Quantity of Two-Pole Positions	**(LATER)**	
5.05	Enclosure Rating	**NEMA 1**	
6	**Spare Parts**		
6.01	One (1) Set of Spare Fuses of Each Size and Type Used in the Equipment	**Not Required**	
6.02	One (1) Set of Spare Lamps for all Lamps Used	**Not Required**	
6.03	One Spare Breaker of Each Size Used	**Not Required**	
6.04	One Set of Spare Meters	**Not Required**	
6.05	Manufacturer Recommended Start-Up Spare Parts	**Required**	
6.06	Manufacturer Recommended Two-Year Spare Parts	**Not Required**	
7	**Drawings Supplied as part of this Specification**		
7.01	Installation Location Arrangement Drawing		
7.02	DC System One-Line Diagram	**20041223-EO-010**	
8	**Data to be supplied by Vendor**		
8.01	Battery		
8.02	Manufacturer		
8.03	Type of Cell		
8.04	Cell Quantity		
8.05	Amp-hour Capacity		
8.06	Assembled Battery/Battery Rack Weight, lbs		
8.07	Assembled Battery/Battery Rack Dimensions (LxWxH), inches		
8.08	Battery Charger(s)		
8.09	Manufacturer and Model		
8.10	DC Output Current Rating, Amps		
8.11	Dimensions, inches		
8.12	Charger Weight, lbs		
8.13	125 VDC Panelboard/Switchboard		
8.14	Manufacturer and Model		
8.15	Dimensions (LxWxH), inches		
8.16	Weight, lbs		
8.17	Training and Start-up Supervision		
8.18	Unit Rates ($/Man Hour)		
8.19	Expenses, meals, lodging, auto, travel included		
8.20	Recommended Erection Assistance (8hr Days)		
8.21	Recommended Training Period (8hr Days)		
9	**Additional Comments**		
9.01			

APPENDIX A

DC ONE-LINES

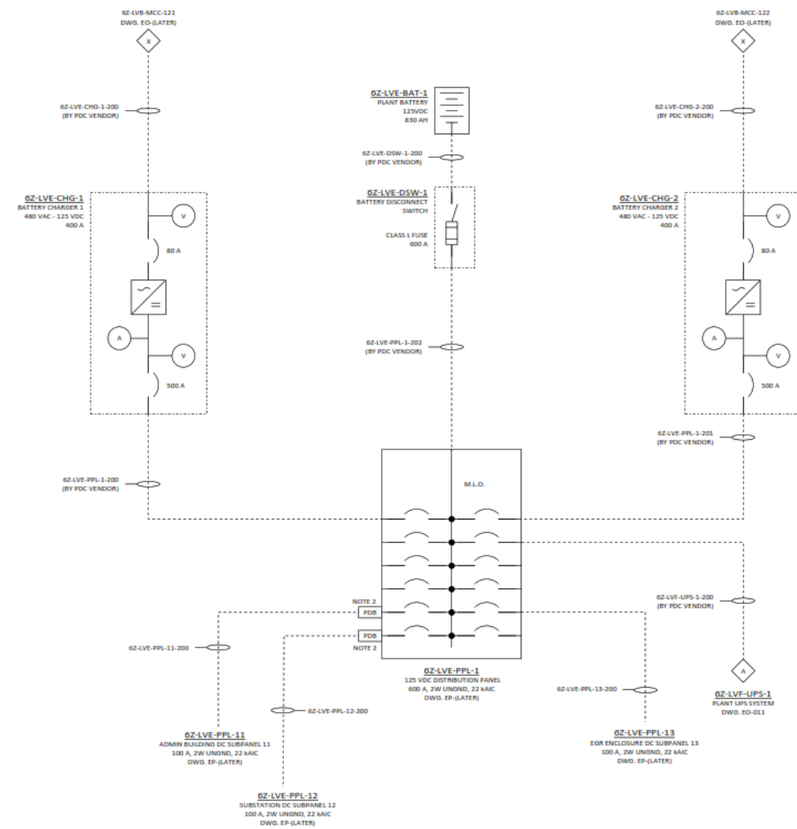

NOTES:

1. BREAKER RATINGS AND ADDITIONAL LOADS ARE LOCATED ON THE PANELBOARD DRAWINGS (LATER).
2. POWER DISTRIBUTION BLOCKS ARE LOCATED IN THE TOP SECTION OF SECTION 2 TO ACCOMODATE LUG REQUIREMENTS OF INCOMING CABLES.

REFERENCE DRAWINGS:

EE-002	ELECTRICAL ENGINEERING STANDARDS AND SYMBOLS LEGEND
EO-011	ELECTRICAL ONE LINE DIAGRAM PLANT UPS SYSTEM

LEGEND:

M.L.O.	MAIN LUG ONLY
PDB	POWER DISTRIBUTION BLOCK
A	DC AMMETER
V	DC VOLTMETER

- PRELIMINARY -
NOT FOR CONSTRUCTION

REV	DESIGN BY	CHECKED BY	DATE
0	ISSUED FOR FEED		
	N. MECHLER	K. SHERMAN	4/21/23

GE/SOUTHERN/LINDE
GE/SOUTHERN/LINDE ADVANCED NGCC INTEGRATION

Kiewit

ELECTRICAL ONE LINE DIAGRAM
PLANT 125 VDC SYSTEM

ENGINEER/DESIGN ORIGINATOR	N. MECHLER
LEAD ENG	N. MECHLER
ENG MGR	B. LOFGREEN
PROJ MGR	B. LOFGREEN

DRAWING NUMBER
20041223-EO-010

Appendix GG

OSBL Uninterruptible Power Supply (UPS) Specification

SPECIFICATIONS FOR UNINTERRUPTIBLE POWER SUPPLY (UPS)

94.03.06.125

GE / SOUTHERN / LINDE ADVANCED NGCC

KIEWIT PROJECT NO. 20041223

ISSUED: MAY 5, 2023

REVISION 0 – ISSUED FOR FEED

TECHNICAL SPECIFICATIONS

TABLE OF CONTENTS

TITLE		Pages	Revision
1B	Section 1B	1B-1 – 1B-5	0
1E	Uninterruptible Power Supply (UPS) Specification	1E-1 – 1E-2	0
TECHNICAL REQUIREMENTS			
APPENDIX A	UPS One-Line Drawings	1 page	0
GENERAL REQUIREMENTS			
E2	Seller Furnished Controls and Wiring	E2-1 – E2-12	
S1	Structural Loading and Design	S1-1 – S1-10	

ESTIMATING SECTION 1B

1. SITE DESIGN CONDITIONS: The Site conditions to be used as design and performance criteria are as follows:

   - Main Plant Finish Grade Elevation (Mean Sea Level) : 23 feet
   - Barometric pressure: 14.7 psia
   - High Ambient Temperature: 105 ° F
   - Low Ambient Temperature: 0 ° F
   - Temperature; Indoor Ambient (Dry Bulb)
     Occupied areas (Air Conditioned) 65 ° F to 75 ° F
     Non-occupied areas (Ventilated and Heated only) 40 ° F to 100 ° F

2. UTILITIES FOR COOLED EQUIPMENT:

   - Instrument Air Pressure Range: 60 – 120 psig
   - Design temperature for air cooled equipment: 105 ° F
   - Design cooling water inlet temperature for water-cooled equipment: 86 ° F
   - Cooling Water Composition 0% propylene glycol/100% water
   - Cooling Water Design Pressure 150 psig
   - Cooling Water Pressure Drop/Temperature Rise (NTE): 10psi /20 ° F

3. STRUCTURAL:

   - Precipitation: Average rainfall: 64 inches/year
   - Design 24 hour Storm Event 25 year / 100 year: 10.3 inches / 14.0 inches
   - Design Snow Loading: 0 psf ground / 0 psf roof (ASCE 7-16)
   - Minimum Design Basic Wind Speed: 153 mph (ASCE 7-16 – Risk Category III)
   - Design Wind Load and importance factor: I_w=1.00 (ASCE 7-16)
   - Exposure: C

ESTIMATING SECTION 1B

- Seismic Loading: Seismic Importance Factor I=1.25
  Occupancy / Risk Category III
  Site Class D
  Spectral Response Accelerations S_S=0.095 g, S_1=0.059 g
  Site coefficients F_a=1.6 and F_v=2.4
  Spectral Response Coefficients S_{DS}=0.109 g, S_{D1}=0.102 g
  Seismic Design Category B
  ATC Hazards by Location (ASCE 7-16)
- Winter Design: Freeze Protection is required; Frost depth = 12”
- Design life of the Facility: 30 years

4. NOISE CONTROL:

   Near Field: The A-weighted sound pressure level resulting from the operation of equipment furnished under these specifications (including drive motors) shall not exceed a free-field average (per piece of equipment) of 85 dBA along the equipment envelope at a height of 5 feet (1.5 meters) above the ground and personnel platforms. The equipment envelope is the perimeter line that completely encompasses the equipment package (including noise control devices) at a distance of 3 feet (1 meter) from the equipment face.

   Far Field: The A-weighted sound pressure level (dBA) at 400 ft from the emission source should be provided for EPC to evaluate the overall plant noise level at the plant boundary.

5. SITE ACCESS:

   The jobsite is located at Plant Barry in Bucks, Alabama. The jobsite can be accessed from the following:

   Road: The site is accessible from Highway 43

   Rail: No site rail access.

   Barge: Barge can be transported via the Mobile River through the Mobile Bay.

6. ADDITIONAL SITE CONSIDERATIONS:

7. GENERAL DESIGN REQUIREMENTS:
   a. Asbestos-containing materials will not be allowed.

ESTIMATING SECTION 1B

b. Only proven and tested technology fo the same model or nominal size and design conditions and in successful operation for at least five years in the exact same application shall be provided. There shall be no exception to this clause.

c. For projects located in Canada, CRN certification and local province requirements shall be incorporated into the equipment and pressure piping system design.

d. Mandatory Construction and Commissioning: One complete set of parts indicated in the Seller's documentation requiring to be replaced during the Construction, Testing or Startup phases of the Project (Mandatory Construction and Commissioning Parts) shall be included in the Seller's scope. For example, manway gaskets, hydro kit gaskets, or other that are routinely replaced after inspections and tests.

e. Pump Designs:Shut-off head at design speed shall be between 115 and 140% of the maximum total dynamic head (excluding circulating water pumps).

f. All rotating components and assemblies shall be dynamically balanced in accordance with Table 1 of ISO 1940.

g. Piping Design:
   i. Unless otherwise indicated in this specification, the minimum carbon steel piping schedule for NPS 2-1/2" and larger is STD, for 2" and smaller is Schedule 80.
   ii. Unless otherwise indicated in this specification, the minimum stainless steel piping schedule for NPS 2-1/2" and larger is 10S, for 2" and smaller is Schedule 40S.
   iii. Minimum allowable resultant force at each equipment nozzle shall be 250 lbs per nominal pipe size (NPS), and the minimum allowable resultant moment at each equipment nozzle shall be 500 ft-lbs per NPS. For instance, a 4 inch nozzle shall be designed for minimum 1,000 lbs resultant force and 2,000 ft-lbs resultant moment.
   iv. For skidded and Seller provided piping, high point vents and low point drains shall be provided. Vents and drains shall normally be isolated with globe valves and gate valves respectively, in liquid service. Ball valves shall be provided for vents & drains in natural gas and air services.
   v. Corrosion Allowance: Pipe wall thickness shall be calculated using the following corrosion allowances:
      - Carbon & Low/Intermediate Alloy Steels: 0.020"
      - Creep Strength Enhanced Ferritic (CSEF) Steels – 0.060"
      - Stainless Steel and Nickel Alloys : 0.000"
   vi. Steel flanges 2-1/2 inch and larger except for grooved pipe shall be weld neck, slip-on type is permitted for class 150 only, and all steel flanges 2 inch and smaller shall be of the socket type.
   vii. Fittings for tubing shall be flareless compression type, Swagelok or Parker Type 316 stainless steel.

ESTIMATING SECTION 1B

viii. All vent and drain islolation valves and instrument root valves rated ASME Class 900 or greater shall utilize double block root valves.
ix. Valve Actuators: Gear actuators shall be used on all valve sizes greater than 6 inch, and on any valve requiring more than 75 pounds rim pull to operate the valve at the maximum differential pressure.
x. All valve bonnets for valves with design temperatures of 150F or higher shall be provided with bonnet over pressure protection.

h. Approved Vendors:
i. Steel body gate, globe, angle, and check valves shall be manufactured by Velan, Crane, Pacific Valves, Anderson Greenwood-Crosby, Edward Vogt, SPX Corporation, Fisher Controls International, or Dresser, Inc.
ii. Butterfly valves shall be manufactured by Bray, Crane, Xomox, Ebro, Amri, or Centerline.
iii. Control valves shall be manufacturered by Fisher, Valtek, Leslie, Koso, or CCI.
iv. Coupling shall be of the flexible spacer type by Falk, Zurn, or engineer approved equal.
v. Instruments shall be manufacturered by:
- Transmitters: Rosemount, Foxboro
- Level Gauges: Jerguson
- Pressure Gauges, Temperature Switches: Ashcroft
- Temperature Gauges: Ashcroft EI case style
- Pressure and Differential Pressure Switches: Ashcroft, Merriam, Midwest
- Level Switches: Magnetrol, SOR, Jerguson/Magne-Sonics
- Solenoid Valves: ASCO
- Critical Service Flow Elements:, Triad, Fluidic Technologies, PFS
- Non-Critical Service Flow Elements: Dietrich Standard, Deltabar/Midwest Instruments, Veris
- Heated Instrument Enclosure: O'Brien

i. General Weld Requirements:
- Structural steel welding shall be in accordance with the applicable AWS welding code.
- Welding of fluid-conveying, non-structural steel, piping and pressure-containing materials shall be in accordance with ASME BPVC Section IX.

8. Quality and Examination Requirements:
a. Seller and Seller's sub-suppliers shall have a Quality Management System, approved by the buyer, in accordance with ISO9001. The Seller shall provide transparent supply chain integrity for the material sources.

b. Records in accordance to referenced code shall be maintained and available for submittal to the Buyer upon request. These records include but are not limited to:
i. Material Test Reports (MTR) of base and welding materials
ii. Welding Procedure Specification (WPS) and supporting Procedure Qualification Record (PQR)

ESTIMATING SECTION 1B

iii. Heat Treatment Records
iv. Final Non Destructive Examination (NDE) reports
v. Repair records
vi. Personnel qualification records
vii. Nonconformance reports
viii. Manufacture's Data Reports (MDR)

END OF SECTION

Project: GE/Southern/Linde Advanced NGCC Integration
Kiewit #: 20041223
Revision: 0

SPECIFICATION 94.03.06.125
120 VAC Uninterruptible Power System

Item	Description	Specified Data	By Bidder	See Note	Rev. #
	Specification Summary				
	This specification covers the design, fabrication, testing and delivery of a 120 VAC Uninterruptible Power System in accordance with this specification and stated Standards. Site parameters can be found in additional attachments.				
1	**Inverter and System Requirements**				
1.01	Quantity	**One (1)**			
1.02	Unit Rating, kVA (at 1.0 pf)	**30**			
1.03	Inverter Type	**PWM or Ferro**			
1.04	Output Nominal Voltage, Volts AC	**120**			
1.05	Minimum Input Voltage, Volts DC	**105**			
1.06	Maximum Input Voltage, Volts DC	**140**			
1.07	Output Voltage Regulation, Load Power Factor of 0.8 to 1.0	**+/- 2.0%**			
1.08	Output Frequency Regulation	**+/- 0.1%**			
1.09	Efficiency, at Rated Load	**83-88%**			
1.10	Harmonic Distortion	**<5% THD**			
1.11	Overload Capacity for 30 seconds, without bypass source	**150%**			
1.12	Overload Capacity for 10 minutes, without bypass source	**125%**			
2	**Additional Items**				
2.01	Integral Static Transfer Switch	**Included**			
2.02	Input with 1 pole breaker, 35kAIC minimum; Zero Transfer Time; 100-125% Adjustable Overcurrent Transfer Capacity; 1000% Overload Capacity (1-cycle); Sync Supervised.				
2.03	Integral Manual Bypass Switch	**Included**			
2.04	Input with 1 pole breaker, 35kAIC minimum with 600VAC Rotary Drum; Make Before Break Switching with Zero Transfer Time; Sync Supervised; Continuous Operation at 125% of Rated Full Load; 1000% Overload Capacity (1-cycle)				
2.05	Inverter Enclosure Rating	NEMA 1			
2.06	UPS System Enclosure Finish	**Manufacturer's Standard**			
2.07	UPS System Alternate Power Source	**Included**			
2.08	Shielded Isolation Transformer, Dry Type, 150°C Rise, Copper Windings, 45dBA Sound Level, 4x2.5% Taps, Indoor Enclosure, Floor Mounted, kVA capacity as required for specified Rating of Inverter				
2.09	Transformer Type	**Regulating**			
2.10	UPS System Alarms and Indications				
2.11	Lighted Mimic Panel w/ Graphic Block Diagram (Includes indicators for Battery Supplying Load, Bypass Source Failure, Fan Failure, Inverter Failure, Low DC Disconnect, Inverter in Sync, Inverter Supplying Load, Bypass Supplying Load)	Included			
2.12	Common Alarm Output Relay	Included			
2.13	System Meters				
2.14	Voltmeters: AC Output, DC Input, Bypass Source Input	Included			
2.15	Ammeters: AC Output, DC Input, Bypass Source Input	Included			
2.16	Frequency Meter: AC Output	Included			
3	**UPS Power Panel(s)**				
3.01	Quantity	**See One Line**			
3.02	Rating of Panel Bus (MLO), Amps	**See One Line**			
3.03	Number of Single Pole Positions	**See One Line**			
3.04	Outgoing Feeder Protective Devices, 10kAIC	**Fused Switches**			
3.05	Enclosure Rating	**NEMA 1**			
4	**Spare Parts**				
4.01	One (1) Set of Spare Fuses of Each Size and Type Used in the Equipment	**Required**			
4.02	One (1) Set of Spare Lamps for all Lamps Used	**Required**			
4.03	One Spare Breaker of Each Size Used	**Not Required**			
4.04	One Set of Spare Meters	**Not Required**			
4.05	Manufacturer Recommended Start-Up Spare Parts	**Required**			
4.06	Manufacturer Recommended Two-Year Spare Parts	**Not Required**			
5	**Codes and Standards**				
5.01	Follow All the Latest Applicable Standards and Codes Including but Not Limited To				
5.02	American National Standards Institute (ANSI)				
5.03	American Society of Testing and Materials (ASTM)				
5.04	Canadian Electrical Code (CEC)	**N/A**			
5.05	Canadian Standards Association (CSA)	**N/A**			
5.06	Institute of Electrical and Electronic Engineers (IEEE)				
5.07	IEEE C37.90.1				
5.08	IEEE C57.15				
5.09	IEEE 693				
5.10	National Electric Code (NEC)				
5.11	National Electric Safety Code (NESC)				
5.12	PB 1				
5.13	PB 1.1				
5.14	PE 1				
5.15	National Electrical Manufacturers Association (NEMA)				
5.16	NEMA TR-1				
5.17	National Fire Protection Association (NFPA)				
5.18	NFPA 70				
5.19	Underwriters Laboratories (UL)				
5.20	UL 50				
5.21	UL 1778				
5.22	Occupational Safety and Health Administration (OSHA)				
5.23	Mexican Standards (NOM)				
5.24	NOM-001-SEDE Instalaciones Eléctricas (utilización)	**N/A**			
5.25	NOM-001-SCFI Aparatos electrónicos-Requisitos de seguridad y métodos de prueba	**N/A**			
5.26	NMX-I-163-NYCE Equipo Electrónico-Sistemas de energía ininterrumpida-Requisitos	**N/A**			
5.27	NMX-J-515-ANCE Equipos de control y distribución-especificaciones y método de prueba	**N/A**			
5.28	Other				
6	**Drawings Supplied as part of this Specification**				
6.01	Installation Location Arrangement Drawing				
6.02	UPS One-Line Diagram				

Page 1 of 2

Project: GE/Southern/Linde Advanced NGCC Integration
Kiewit #: 20041223
Revision: 0

SPECIFICATION 94.03.06.125
120 VAC Uninterruptible Power System

Item	Description	Specified Data	By Bidder	See Note	Rev. #
7	**Data to be supplied by Vendor**				
7.01	Inverter				
7.02	Manufacturer				
7.03	Inverter kVA Rating at 1.0 pf				
7.04	Enclosure Dimensions (LxWxH), inches(mm)				
7.05	Weight, lbs (Kgs)				
7.06	Alternate Source Transformer				
7.07	Manufacturer				
7.08	kVA Rating				
7.09	Dimensions (LxWxH), inches (mm)				
7.10	Weight, lbs (Kgs)				
7.11	Training and Start-up Supervision				
7.12	Unit Rates ($/Man Hour)				
7.13	Expenses, meals, lodging, auto, travel included				
7.14	Recommended Erection Assistance (8hr Days)				
7.15	Recommended Training Period (8hr Days)				
8	**Additional Comments**				
8.01					

APPENDIX A

UPS ONE-LINE DRAWINGS

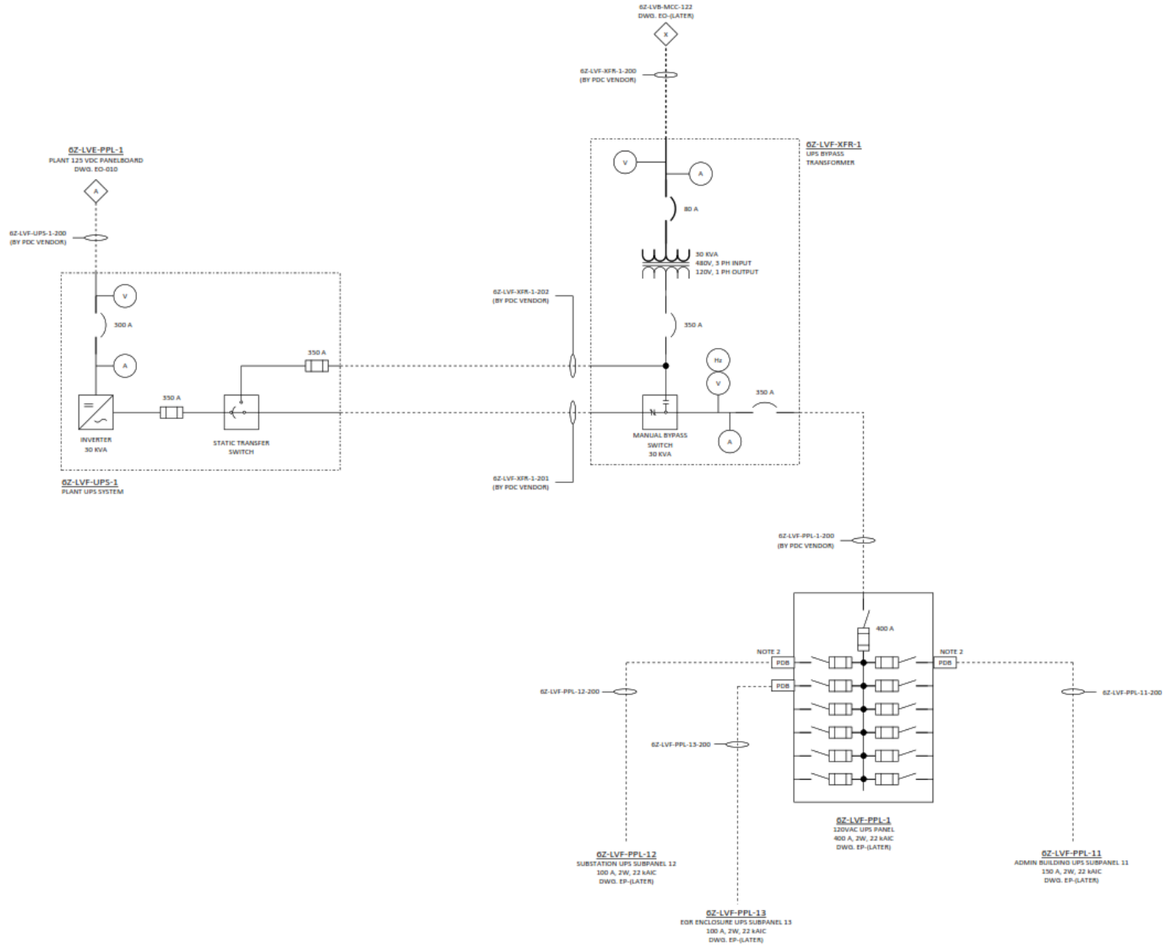

NOTES:

1. BREAKER RATINGS AND ADDITIONAL LOADS ARE LOCATED ON THE PANELBOARD DRAWINGS (LATER).
2. POWER DISTRIBUTION BLOCKS ARE LOCATED IN THE TOP SECTION OF SECTION 2 TO ACCOMODATE LUG REQUIRMENTS OF INCOMING CABLES.

REFERENCE DRAWINGS:

EE-002	ELECTRICAL ENGINEERING STANDARDS AND SYMBOLS LEGEND
EO-010	ELECTRICAL ONE LINE DIAGRAM PLANT 125VDC SYSTEM

LEGEND:

M.L.O.	MAIN LUG ONLY
PDB	POWER DISTRIBUTION BLOCK
A	DC AMMETER
V	DC VOLTMETER
Hz	FREQUENCY MEASUREMENT

- PRELIMINARY -
NOT FOR CONSTRUCTION

REV	DESIGN BY	CHECKED BY	DATE
0	ISSUED FOR FEED N. MECHLER	R. SHERMAN	4/21/23

GE/SOUTHERN/LINDE
GE/SOUTHERN/LINDE ADVANCED NGCC INTEGRATION

Kiewit

ELECTRICAL ONE LINE DIAGRAM
PLANT UPS SYSTEM

ENGINEER/DESIGN ORIGINATOR	N. MECHLER
LEAD ENG	N. MECHLER
ENG MGR	B. LOFGREEN
PROJ MGR	B. LOFGREEN

DRAWING NUMBER
20041223-EO-011

Appendix HH

OSBL Electrical Enclosures Specification

Notes:

(1) The Factory Acceptance Test Procedure within this specification is marked “DRAFT”. This procedure will be updated at time of purchase order.

Kiewit

SPECIFICATIONS FOR
ELECTRICAL ENCLOSURES

94.03.08.100

GE / SOUTHERN / LINDE ADVANCED NGCC

KIEWIT PROJECT NO. 20041223

ISSUED: MAY 5, 2023

REVISION 0 – ISSUED FOR FEED

TECHNICAL SPECIFICATIONS

TABLE OF CONTENTS

TITLE		Pages	Revision
1B	Section 1B	1B-1 – 1B-5	0
1E	Electrical Enclosure Specification	1E-1 – 1E-3	0
2E	Medium Voltage Switchgear Specification	2E-1 – 2E-8	0
3E	Low Voltage Switchgear Specification	3E-1 – 3E-3	0
4E	Low Voltage Motor Control Center Specification	4E-1 – 4E-3	0

TECHNICAL REQUIREMENTS

APPENDIX A
Overall One-Line Diagrams ..... 4 pages 0

APPENDIX B
Enclosure Layouts ..... 1 page 0

APPENDIX C
Load List ..... 6 pages 0

APPENDIX D
FAT Procedures ..... 34 pages 0

APPENDIX E
Cable Bus Arrangement Drawings ..... 1 page 0

GENERAL REQUIREMENTS

E1	Motors-Induction Squirrel Cage Type	E1-1 – E1-20	
E2	Seller Furnished Controls and Wiring	E2-1 – E2-12	
I1	Seller Furnished Programmable Logic Controllers	I1-1 – I1-6	
I2	General Instrumentation Requirements	I2-1 – I2-12	
I3	Cybersecurity Requirements	I3-1 – I3-12	
	Cyber Assets Log	3 pages	

White Listed Ports and Services Log..... 1 page
Technical Feasibility Exception (TFE) Template..... 4 pages

S1 Structural Loading and Design ..... S1-1 – S1-10

S2 Structural Steel Fabrication and Supply ..... S2-1 – S2-18

ESTIMATING SECTION 1B

1. SITE DESIGN CONDITIONS: The Site conditions to be used as design and performance criteria are as follows:

   - Main Plant Finish Grade Elevation (Mean Sea Level) : 23 feet
   - Barometric pressure: 14.7 psia
   - High Ambient Temperature: 105 ° F
   - Low Ambient Temperature: 0 ° F
   - Temperature; Indoor Ambient (Dry Bulb)
     Occupied areas (Air Conditioned) 65 ° F to 75 ° F
     Non-occupied areas (Ventilated and Heated only) 40 ° F to 100 ° F

2. UTILITIES FOR COOLED EQUIPMENT:

   - Instrument Air Pressure Range: 60 – 120 psig
   - Design temperature for air cooled equipment: 105 ° F
   - Design cooling water inlet temperature for water-cooled equipment: 86 ° F
   - Cooling Water Composition 0% propylene glycol/100% water
   - Cooling Water Design Pressure 150 psig
   - Cooling Water Pressure Drop/Temperature Rise (NTE): 10psi /20 ° F

3. STRUCTURAL:

   - Precipitation: Average rainfall: 64 inches/year
   - Design 24 hour Storm Event 25 year / 100 year: 10.3 inches / 14.0 inches
   - Design Snow Loading: 0 psf ground / 0 psf roof (ASCE 7-16)
   - Minimum Design Basic Wind Speed: 153 mph (ASCE 7-16 – Risk Category III)
   - Design Wind Load and importance factor: I_w=1.00 (ASCE 7-16)
   - Exposure: C

ESTIMATING SECTION 1B

- Seismic Loading: Seismic Importance Factor I=1.25
  Occupancy / Risk Category III
  Site Class D
  Spectral Response Accelerations S_S=0.095 g, S_1=0.059 g
  Site coefficients F_a=1.6 and F_v=2.4
  Spectral Response Coefficients S_{DS}=0.109 g, S_{D1}=0.102 g
  Seismic Design Category B
  ATC Hazards by Location (ASCE 7-16)
- Winter Design: Freeze Protection is required; Frost depth = 12”
- Design life of the Facility: 30 years

4. NOISE CONTROL:

   Near Field: The A-weighted sound pressure level resulting from the operation of equipment furnished under these specifications (including drive motors) shall not exceed a free-field average (per piece of equipment) of 85 dBA along the equipment envelope at a height of 5 feet (1.5 meters) above the ground and personnel platforms. The equipment envelope is the perimeter line that completely encompasses the equipment package (including noise control devices) at a distance of 3 feet (1 meter) from the equipment face.

   Far Field: The A-weighted sound pressure level (dBA) at 400 ft from the emission source should be provided for EPC to evaluate the overall plant noise level at the plant boundary.

5. SITE ACCESS:

   The jobsite is located at Plant Barry in Bucks, Alabama. The jobsite can be accessed from the following:

   Road: The site is accessible from Highway 43

   Rail: No site rail access.

   Barge: Barge can be transported via the Mobile River through the Mobile Bay.

6. ADDITIONAL SITE CONSIDERATIONS:

7. GENERAL DESIGN REQUIREMENTS:
   a. Asbestos-containing materials will not be allowed.

ESTIMATING SECTION 1B

b. Only proven and tested technology fo the same model or nominal size and design conditions and in successful operation for at least five years in the exact same application shall be provided. There shall be no exception to this clause.

c. For projects located in Canada, CRN certification and local province requirements shall be incorporated into the equipment and pressure piping system design.

d. Mandatory Construction and Commissioning: One complete set of parts indicated in the Seller's documentation requiring to be replaced during the Construction, Testing or Startup phases of the Project (Mandatory Construction and Commissioning Parts) shall be included in the Seller's scope. For example, manway gaskets, hydro kit gaskets, or other that are routinely replaced after inspections and tests.

e. Pump Designs:Shut-off head at design speed shall be between 115 and 140% of the maximum total dynamic head (excluding circulating water pumps).

f. All rotating components and assemblies shall be dynamically balanced in accordance with Table 1 of ISO 1940.

g. Piping Design:
   i. Unless otherwise indicated in this specification, the minimum carbon steel piping schedule for NPS 2-1/2" and larger is STD, for 2" and smaller is Schedule 80.
   ii. Unless otherwise indicated in this specification, the minimum stainless steel piping schedule for NPS 2-1/2" and larger is 10S, for 2" and smaller is Schedule 40S.
   iii. Minimum allowable resultant force at each equipment nozzle shall be 250 lbs per nominal pipe size (NPS), and the minimum allowable resultant moment at each equipment nozzle shall be 500 ft-lbs per NPS. For instance, a 4 inch nozzle shall be designed for minimum 1,000 lbs resultant force and 2,000 ft-lbs resultant moment.
   iv. For skidded and Seller provided piping, high point vents and low point drains shall be provided. Vents and drains shall normally be isolated with globe valves and gate valves respectively, in liquid service. Ball valves shall be provided for vents & drains in natural gas and air services.
   v. Corrosion Allowance: Pipe wall thickness shall be calculated using the following corrosion allowances:
      - Carbon & Low/Intermediate Alloy Steels: 0.020"
      - Creep Strength Enhanced Ferritic (CSEF) Steels – 0.060"
      - Stainless Steel and Nickel Alloys : 0.000"
   vi. Steel flanges 2-1/2 inch and larger except for grooved pipe shall be weld neck, slip-on type is permitted for class 150 only, and all steel flanges 2 inch and smaller shall be of the socket type.
   vii. Fittings for tubing shall be flareless compression type, Swagelok or Parker Type 316 stainless steel.

ESTIMATING SECTION 1B

viii. All vent and drain islolation valves and instrument root valves rated ASME Class 900 or greater shall utilize double block root valves.
ix. Valve Actuators: Gear actuators shall be used on all valve sizes greater than 6 inch, and on any valve requiring more than 75 pounds rim pull to operate the valve at the maximum differential pressure.
x. All valve bonnets for valves with design temperatures of 150F or higher shall be provided with bonnet over pressure protection.

h. Approved Vendors:
i. Steel body gate, globe, angle, and check valves shall be manufactured by Velan, Crane, Pacific Valves, Anderson Greenwood-Crosby, Edward Vogt, SPX Corporation, Fisher Controls International, or Dresser, Inc.
ii. Butterfly valves shall be manufactured by Bray, Crane, Xomox, Ebro, Amri, or Centerline.
iii. Control valves shall be manufacturered by Fisher, Valtek, Leslie, Koso, or CCI.
iv. Coupling shall be of the flexible spacer type by Falk, Zurn, or engineer approved equal.
v. Instruments shall be manufacturered by:
- Transmitters: Rosemount, Foxboro
- Level Gauges: Jerguson
- Pressure Gauges, Temperature Switches: Ashcroft
- Temperature Gauges: Ashcroft EI case style
- Pressure and Differential Pressure Switches: Ashcroft, Merriam, Midwest
- Level Switches: Magnetrol, SOR, Jerguson/Magne-Sonics
- Solenoid Valves: ASCO
- Critical Service Flow Elements:, Triad, Fluidic Technologies, PFS
- Non-Critical Service Flow Elements: Dietrich Standard, Deltabar/Midwest Instruments, Veris
- Heated Instrument Enclosure: O'Brien

i. General Weld Requirements:
- Structural steel welding shall be in accordance with the applicable AWS welding code.
- Welding of fluid-conveying, non-structural steel, piping and pressure-containing materials shall be in accordance with ASME BPVC Section IX.

8. Quality and Examination Requirements:
a. Seller and Seller's sub-suppliers shall have a Quality Management System, approved by the buyer, in accordance with ISO9001. The Seller shall provide transparent supply chain integrity for the material sources.

b. Records in accordance to referenced code shall be maintained and available for submittal to the Buyer upon request. These records include but are not limited to:
i. Material Test Reports (MTR) of base and welding materials
ii. Welding Procedure Specification (WPS) and supporting Procedure Qualification Record (PQR)

ESTIMATING SECTION 1B

iii. Heat Treatment Records
iv. Final Non Destructive Examination (NDE) reports
v. Repair records
vi. Personnel qualification records
vii. Nonconformance reports
viii. Manufacture's Data Reports (MDR)

END OF SECTION

Project: GE/Southern/Linde Advanced NGCC Integration
Kiewit #: 20041223
Revision: 0

SPECIFICATION 94.03.08.100
Electrical Enclosure

Item	Description	Specified Data	By Bidder	See Note	Rev. #
	Specification Summary				
	This specification covers the design, fabrication, testing and delivery of the Electrical Enclosure(s) in accordance with this specification and stated Standards. Site parameters can be found in additional attachments.				
1	**General Requirements**				
1.01	Application	**Outdoor**			
1.02	Quantity	**See Enclosure Layouts**			
1.03	Minimum Interior Length	**Per Equipment Layout Drawing**			
1.04	Minimum Interior Width	**Per Equipment Layout Drawing**			
1.05	Minimum Interior Height	**12FT**			
1.06	**Shipping splits**				
1.07	Medium Voltage Enclosure	**2**			
1.08	EGR Enclosure	**1**			
2	**Construction Requirements**				
2.01	**Enclosure shall be anchored to and supported by:**				
2.02	Medium Voltage Enclosure	**Stilts**	**By Contractor**		
2.03	**Heavy Structural Steel Enclosure Base, Rigidly Braced**				
2.04	Welded Perimeter Beam Construction, Skid Type	**Included**			
2.05	Structural Steel Angle Iron Supports	**Not Included**			
2.06	Removable Lifting Lugs	**Included**			
2.07	Floor shall be 1/4" Steel Plate Welded to Base & Perimeter	**Included**			
2.08	Floor Covering shall be Durable Non-Skid Gray Floor Enamel	**Included**			
2.09	Floor Penetrations with Surface Mounted Covers	**Included**			
2.10	4" cutouts for conduit entry (includes ground bushing)	**80 for MV PDC; 40 each for other PDCs**			
2.11	**Roof (Peak 3" per 15' to Shed Water)**				
2.12	Painted Aluminum Gutter & Downspouts	**Included**			
2.13	Roof Penetrations with Weathertight Seals	**Included**			
2.14	Design Roof Loading (lbs per square foot)	**See Section 1B**			
2.15	**Walls**				
2.16	Exterior Panels shall be 18 Guage Galvanized Steel	**Included**			
2.17	Interior Panels shall be 16 Guage Galvanized Steel	**Included**			
2.18	Wall Penetrations with Weathertight Seals	**Included**			
2.19	Design Wind Loading (MPH)	**See Section 1B**			
2.20	**Minimum Insulation**				
2.21	Wall Insulation	**R-11**			
2.22	Ceiling Insulation	**R-19**			
2.23	Floor Insulation	**R-8**			
2.24	**Doors**				
2.25	Material	**14 Guage Galvanized Steel**			
2.26	Features				
2.27	Panic Door Hardware	**Included**			
2.28	Auto Closer	**Included**			
2.29	Hold-Open Alarm	**Included**			
2.30	Viewing Window	**Included**			
2.31	Key Lock	**Included**			
2.32	Exterior Rain Canopies	**Included**			
2.33	Double Wide doors shall be 6' W x 8' H	**Included**			
2.34	Single Wide doors shall be 4' W x 8' H	**Included**			
2.35	Rear Access Doors for Installed Equipment	**Included**			
2.36	**Paint Finish**				
2.37	Roof & Walls, Interior & Exterior	**Polyester Powdercoat**			
2.38	Floor, Exterior	**Epoxy Mastic Undercoat**			
2.39	Floor Interior	**Non-Skid Paint**			
2.40	Battery Room Floor, Interior	**Acid Resistant Epoxy Coating**			
2.41	Battery Rack	**Acid Resistant Epoxy Coating**			
3	**Accessories**				
3.01	**Lighting**				
3.02	Minimum Illumination Level	**35 Foot Candles at Floor Level**			
3.03	Electric Fluorescent Fixtures, 120VAC, 2-32 Watt	**Included**			
3.04	Exterior Light, 70 Watt HPS, Photocell Activated, at Each Door	**Included**			
3.05	Interior Exit & Emergency Light Fixtures	**Included**			
3.06	Three Way Light Switches at Each Door	**Included**			
3.07	**Receptacles, Duplex 120VAC, 20A, GFCI**				
3.08	Two (2) Interior GFCI Receptacles	**Included**			
3.09	Two (2) Exterior GFCI Receptacles	**Included**			
3.10	**60A Welding Receptacle with integral disconnect mounted and wired to external module wall prior to shipment**	**Included**			
3.11	**Fire Protection**				
3.12	Fire Extinguishers, CO2, 20 lbs., Rated B-C Fire Class	**Included**			
3.13	Two (2) Smoke Detectors with Auxiliary Contacts	**Included**			
3.14	Manual Pull Fire Alarm Station	**Included**			
3.15	**Building Service Transformer**				
3.16	Size	**45 kVA, 3 Ph, 480-208/120VAC**			
3.17	Vibration-Isolating Mounting	**Included**			
3.18	**Panelboard**				
3.19	One (1) 480V, 225A, 3 Ph, 3 Wire, 36 Pole Panelboard	**Included**			
3.20	One (1) 208/120V, 225A, 3 Ph, 3 Wire, 42 Pole Panelboard	**Included**			
3.21	**HVAC**				
3.22	Minimum Indoor Temperature (Degree F)	**58**			
3.23	Maximum Indoor Temperature (Degree F)	**78**			
3.24	Adjustable Thermostat	**Included**			
3.24	Supply Power	**480VAC, 3 Ph**			
3.25	Redundancy	**N+1**			
3.25	**Battery Room (For Contractor Supplied DC Battery)**				
3.26	Dual Battery Room Vent Fans	**Included**			
3.26	Safety Shower	**Included**			

3.27	Room Classified Class 1 Div 2	**Included**	
3.27	**Grounding System**		
3.28	Silver Plated Copper Ground Loop, 1/4" x 2"	**Included**	
3.28	Stainless Steel Ground Pads on Diagonal Building Corners	**Included**	
3.29	Each Equipment Ground Bus Connected to Building Ground	**Included**	
4	**Installation & Wiring of Buyer Provided Equipment**		
4.01	Medium Voltage Switchgear & Motor Control Center	**Included**	
4.02	Low Voltage Switchgear	**Included**	
4.03	Low Voltage Motor Control Center	**Included**	
4.04	DCS Wiring	**Included**	
4.05	Battery System	**Included**	
4.06	UPS Equipment	**Included**	
4.07	Cable Bus with Weathertight Seal	**Included**	
4.08	Number of Terminations	**See Bid Form**	
5	**Additional Items**		
5.01	Plant Battery System Safety Accessories		
5.02	Stainless Steel Drip Pan with Floor Drain	**Install Only**	
5.03	Eye Wash & Bowl	**Included**	
5.04	Emergency Shower	**Included**	
5.05	PPE Cabinet	**Included**	
6	**Spare Parts**		
6.01	One Gallon Exterior Paint	**Required**	
6.02	One Gallon Interior Paint	**Required**	
6.03	One Gallon Non-Skid Floor Paint	**Required**	
6.04	Manufacturer Recommended Start-Up Spare Parts	**Required**	
6.05	Manufacturer Recommended Two-Year Spare Parts	**Not Required**	
7	**Codes and Standards**		
7.01	Follow All the Latest Applicable Standards and Codes Including but Not Limited To		
7.02	American Institute of Steel Contruction (AISC)		
7.03	American National Standards Institute (ANSI)		
7.04	American Society of Testing and Materials (ASTM)		
7.05	Canadian Electrical Code (CEC)	**N/A**	
7.06	Canadian Standards Association (CSA)	**N/A**	
7.07	Institute of Electrical and Electronic Engineers (IEEE)		
7.08	National Electric Code (NEC)		
7.09	National Electric Safety Code (NESC)		
7.10	National Electrical Manufacturers Association (NEMA)		
7.11	NEMA ST-20 Dry Type Transformer for General Applications		
7.12	National Fire Protection Association (NFPA)		
7.13	Underwriters Laboratories (UL)		
7.14	489 Molded-Case Breakers and Circuit Breaker Enclosures		
7.15	506 Special Transformers		
7.16	943 Ground-Fault Circuit Interrupters		
7.17	Other		
8	**Drawings Supplied as part of this Specification**		
8.01	Site General Arrangement	**Not Included**	
8.02	One-Line Diagram	**Included**	
8.03	Module and Equipment Layout	**Included**	
9	**Data to be supplied by Vendor**		
9.01	Interior Length		
9.02	Interior Width		
9.03	Interior Height		
9.04	Bill of Materials		
9.05	Shipping Weight (lbs) (with all Equipment)		
10	**Required Production Documentation (not limited to the list below)**	Weeks after NTP (unless noted otherwise)	
10.01	O&M Manuals - Standard 3-ring binder	4 weeks after delivery	
10.02	# of Proof copies required - 4	N/A	
10.03	# of Final copies required - 8	N/A	
10.04	# of CD's required - 8	N/A	
10.05	Special O&M Manual requirements - None	N/A	
10.06	Outline with overall dimensions, NTE weights, foundation requirements	6	
10.07	Final Layout dwgs	12	
10.08	Building electrical drawings - includes lighting layouts, panelboard schedules, wiring diagrams, circuit and termination schedule for building wiring	12	
10.09	PE Stamped structural drawings (if required)	16	
10.10	PE Stamped HVAC and lighting drawings (if required)	8	
11	**Testing requirements**		
11.01	Minimum number of factory acceptance tests per module	One	
11.02	Expected duration of each acceptance test	2 Days	
11.03	Basic tests to include Seller is expected to support:		
11.04	Continuity test on all control cables with required documentation	Include	
11.05	Seller to apply voltage and function test all installed equipment	Include	
11.06	Point to Point wire checks including termination pull test to ensure cables are landed securely	Include	
11.07	Megger test of all MV and LV buses assembled at the PDC supplier location - include documentation	Include	
11.08	Megger test of any MV cable installed by supplier - include documentation	Include	
12	**Typical Payment Milestones**		
12.01	Upon approval of engineering deliverables for all major equipment being supplied	10%	
12.02	Upon submittal of unpriced purchase orders for major equipment	20%	
12.03	Upon Seller's receipt of Contractor's release for fabrication	10%	
12.04	Upon proof of Seller's receipt of major equipment to PDC Supplier	20%	

12.05	Upon complete delivery and acceptance of PDC and loose shipped equipment to project site	35%	
12.06	Upon Contractor approval of final O&M manuals and all outstanding engineering deliverables	5%	
13	***Expected Delivery***	*Seller to provide capabilities*	
14	**Additional Comments**		
14.01			

Project: GE/Southern/Linde Advanced NGCC Integration
Kiewit #: 20041223
Revision: 0

SPECIFICATION
13.8kV Medium Voltage Metal-Clad Switchgear

Item	Description	Specified Data	By Bidder	See Note	Rev. #
	Specification Summary				
This specification covers the design, fabrication, testing, and delivery of medium-voltage metal-clad switchgear, medium-voltage motor controllers, or integrated assembly with both medium-voltage metal-clad switchgear and medium-voltage motor controllers. All having the ratings and accessories as specified herein.					
1	**Lineup General Requirements**				
1.01	Lineup Name	See One-Line			
1.02	Lineup Tag	See One-Line			
1.03	Installation Location	Indoors in Pre-Package Enclosure			
1.04	Enclosure Rating	NEMA 1			
1.05	Nominal Voltage Class (kV)	13.8			
1.06	Configuration	3-Phase, 3-Wire			
1.07	System Grounding				
1.08	Type	Low Resistance Grounded			
1.09	Current	400 Amps			
1.10	Grounding Equipment Location	External Provided by Others			
1.11	Minimum Interrupting Current Capability (kA rms sym.) (K=1)	50			
1.12	Arc-resistant Construction	Not Required			
1.13	Minimum Arcing Current Rating	>= Rating Interrupting Current			
1.14	Minimum Rated Arcing Duration	0.5 seconds			
1.15	Arc-flash Plenum	Not Required			
1.16	Configuration	Two High			
1.17	Main Bus				
1.18	Minimum Current Capability (A rms)	See One-Line			
1.19	Material and Plating	Copper with Silver Plating			
1.20	Insulated Busbars	Required			
1.21	Neutral Bus	Neutral Bus Not Required			
1.22	Ground Bus, Full Length				
1.23	Material and Plating	Copper with Tin Plating			
1.24	Minimum Size	1/4 x 2 inch			
1.25	Incoming Line Section				
1.26	Connection	Top Entry			
1.27	Conductor Type	Cable Bus			
1.28	Surge Arresters	Yes - 1 per Phase			
1.29	Outgoing Feeders				
1.30	Connection	Bottom Entry			
1.31	Conductor Type	Cable			
1.32	Surge Arresters	N/A			
1.33	Control Cable Entry	Top and Bottom Entry			
1.34	Rear Doors	Lockable			
1.35	Front Doors	Lockable			
1.36	Compartment Space Heaters	Each Section			
1.37	Rated Voltage	240VAC			
1.38	Energization Voltage	120VAC			
1.39	Thermostats	One per Line Up			
1.40	Lights and Receptacles				
1.41	Lights, Fluorescent or LED, 120 VAC	Not Required			
1.42	Receptacles, Duplex 120 VAC	Not Required			
1.43	Power Source	External Provided by Others			
1.44	Terminal Blocks				
1.45	Current Transformers	Shorting Type			
1.46	Voltage Transformers	Marathon or Equal			
1.47	Power (Low Voltage)	Marathon or Equal			
1.48	Control	Marathon or Equal			
2	**Control Power Requirements**				
2.01	Switchgear Breakers				
2.02	Trip	125VDC			
2.03	Close	125VDC			
2.04	Spring Charging Motor	125VDC			
2.05	Protection Relays	125VDC			
2.06	Contactors				
2.07	Coil	125VDC			
2.08	Protection Relays	125VDC			
2.09	Disconnect Switch	Not Applicable			

Project: GE/Southern/Linde Advanced NGCC Integration
Kiewit #: 20041223
Revision: 0

SPECIFICATION
13.8kV Medium Voltage Metal-Clad Switchgear

Item	Description	Specified Data	By Bidder	See Note	Rev. #
3	**Metal-Clad Switchgear Requirements**				
3.01	Standard - Latest Revisions	**IEEE C37.20.2, IEEE C37.06**			
3.02	Interrupter Insulating Medium	**Vacuum**			
3.03	Removal	**Horizontal Drawout**			
3.04	Arrangement	**Two Breakers per Vertical Section**			
3.05	Maximum Rated Interrupting Time (Cycles)	**Manufacturer's Standard**			
3.06	Maximum Rated Closing Time (Cycles)	**Manufacturer's Standard**			
3.07	Feeder Breaker Quantities				
3.08	1200A	**See One Line**			
3.09	2000A	**See One Line**			
3.10	3000A	**See One Line**			
3.11	4000A	**See One Line**			
3.12	Quantity of Trip Coils per Each Breaker	**One**			
3.13	Trip Coil Monitoring	**Required**			
3.14	Auxiliary Contacts				
3.15	Spare Position Status Auxiliary Contacts	**2 'a' and 2 'b'**			
3.16	Spare Stationary Position Status Contacts (aka MOC)	**4 'a' and 4 'b'**			
3.17	Spare Connection Status Contacts (aka TOC)	**2 N.O. and 2 N.C.**			
3.18	Indicating Lights				
3.19	Open Status	**Required - Green LED**			
3.20	Closed Status	**Required - Red LED**			
3.21	Control Switch	**Required - Control in Test Position Only**			
4	**Medium-Voltage Disconnect Switch Requirements**				
4.01	Standard - Latest Revision	**N/A**			
4.02	Switch Type	**N/A**			
4.03	Operator	**N/A**			
4.04	Mechanical Interlocks with Compartment Door	**N/A**			
4.05	Quantity and Continuous Current Rating	**N/A**			
4.06	Fuses	**N/A**			
4.07	Spare Position Status Auxiliary Contacts	**N/A**			
4.08	Indicating Lights				
4.09	Open Status	**N/A**			
4.10	Closed Status	**N/A**			
4.11	Control Switch	**N/A**			
5	**Medium Voltage Motor Control Center Requirements**				
5.01	Standard - Latest Revision	**NEMA ICS3**			
5.02	Interrupter Insulating Medium	**Vacuum**			
5.03	NEMA E2 Fused FVNR Motor Controller Quantities				
5.04	400A Drawout	**See One-Line**			
5.05	800A Drawout	**See One-Line**			
5.06	NEMA E2 Fused 2-Speed FVNR Motor Controller Quantities				
5.07	400A Drawout	**N/A**			
5.08	Fused Mechanically-Latched Contactor Quantities				
5.09	400A Drawout	**N/A**			
5.10	800A Drawout	**N/A**			
5.11	Auxiliary Contacts				
5.12	Spare Position Status Auxiliary Contacts	**2 'a' and 2 'b'**			
5.13	Spare Mechanism-Operated Contacts (MOC)	**4 'a' and 4 'b'**			
5.14	Spare Truck-Operated Contacts (TOC)	**2 N.O. and 2 N.C.**			
5.15	Indicating Lights				
5.16	Open Status	**Required - Green LED**			
5.17	Closed Status	**Required - Red LED**			
5.18	Test Pushbutton	**Required - Control in Test Position Only**			
5.19	Emergency Stop Pushbutton	**Manufacturer's Standard**			
6	**Instrument Transformer Requirements**				
6.01	CT Relaying Accuracy Class	**Best Possible for Each Application**			
6.02	Voltage Transformers				
6.03	Type	**Withdrawable**			
6.04	Accuracy Class	**0.3 WXY, 1.2Z**			
6.05	Each Bus	**3-Phase Set Wye-Wye Connected**			
6.06	Incoming Side of Each Main	**1-Phase B-N Connected**			
6.07	Current Transformers				
6.08	Relaying Accuracy Class	**Best Possible for Available Space**			
6.09	3-Phase Set of CTs	**As Required**			
6.10	Zero-Sequence CTs				
6.11	Location(s)	**Each Feeder**			
6.12	Ratio	**50:5**			

Project: GE/Southern/Linde Advanced NGCC Integration
Kiewit #: 20041223
Revision: 0

SPECIFICATION
13.8kV Medium Voltage Metal-Clad Switchgear

Item	Description	Specified Data	By Bidder	See Note	Rev. #
7	**Relay and Metering Requirements**				
7.01	Main/Tie Protection	**SEL-751**			
7.02	Voltage Input	**Required**			
7.03	Sync-check Function	**Required**			
7.04	Undervoltage Function	**Required**			
7.05	SUS Transformer Protection - Primary (located in switchgear)	**SEL-751**			
7.06	Quantity	**1**			
7.07	Voltage Input	**Required**			
7.08	Overexcitation Protection Function	**Not Required**			
7.09	Lockout Relay associated with 751	**Required**			
7.10	SUS Transformer Protection - Secondary (located in switchgear)	**N/A**			
7.11	Quantity	**N/A**			
7.12	Voltage Input	**N/A**			
7.13	Overexcitation Protection Function	**N/A**			
7.14	Lockout Relay associated with 751	**N/A**			
7.15	Motor Feeder Protection	**SEL-710**			
7.16	Voltage Input	**Required**			
7.17	Winding RTD Temperature Input	**Required - 6 RTDs**			
7.18	Bearing RTD Temperature Input	**Required - 2 RTDs**			
7.19	Ambient RTD Temperature Input	**Required**			
7.20	Non-Motor Feeder Protection	**SEL-751A**			
7.21	Voltage Input	**Required**			
7.22	Lockout Relays				
7.23	Location(s)	**Main Breakers and each SUS Relay**			
7.24	Manufacturer/Model	**Electroswitch Series 24**			
7.25	Integral Indicating Lights (LED)	**Coil Monitoring and Lockout Tripped**			
7.26	Separate Indicating Lights (LED)	**Not Required**			
7.27	IEC 61850 Communication Required with Each Relay	**Not Required**			
7.28	Arc-Flash Fiber Optic Detection Scheme	**Not Required**			
7.29	Differential Protection Scheme, Including CTs	**Required for Motors**			
7.30	Zone-Selective Interlocking Scheme	**Not Required**			
7.31	Maintenance Switch Scheme for Lineup, including Arming Light and Padlockable Switch	**Required**			
7.32	GPS Clock	**Required**			
7.33	IRIG-B Signal Distribution	**Required**			
7.34	Metering				
7.35	Location(s)	**Not Required**			
7.36	Grade	**N/A**			
7.37	Manufacturer/Model Number	**N/A**			
7.38	Measured Quantities	**N/A**			
7.39	Datalink Requirements - Bidder to provide all equipment (media converters, protocol translation, multiplexing, etc.) to provide one external interface for communication datalink				
7.40	Protocol	**TCP/IP**			
7.41	Media	**Cat6**			
8	**Wiring and Termination Requirements**				
8.01	Wire Type	**Type SIS**			
8.02	Minimum Conductor Sizes for Internal Wiring				
8.03	Current Transformer Circuits	**#10 AWG**			
8.04	Voltage Transformer Circuits	**#12 AWG**			
8.05	Power	**#12 AWG**			
8.06	Instrumentation	**#16 AWG**			
8.07	Labeling	**Opposite End and Ckt name**			
8.08	Terminal Lugs				
8.09	Current Transformer Circuits	**Ring Tongue**			
8.10	Voltage Transformer Circuits	**Ring Tongue**			
8.11	Power (Low Voltage)	**Ring Tongue**			
8.12	Control	**Ring Tongue**			
9	**Additional Items and Spare Parts**				
9.01	Test Cabinet for Operating Breaker Outside Compartment	**Required**			
9.02	Lift Truck	**Required**			
9.03	Mimic Bus	**Not Required**			
9.04	Remote Racking System	**Yes - Portable**			
9.05	IR Inspection Ports	**Not Required**			
9.06	Grounding and Test Device(s)	**Yes**			
9.07	Spare Parts				
9.08	Power Fuses, Two (2) of Each Size	**Not Required**			
9.09	Five (5) Spare LEDs of Each Color	**Not Required**			
9.10	Control Circuit Fuses, 50% Spare	**Not Required**			
9.11	One Set of Spare VT Primary Fuses (2 Total)	**Not Required**			
9.12	One Set of Spare VT Secondary Fuses	**Not Required**			
9.13	One Quart Touch Up Paint	**Required**			
9.14	Manufacturer Recommended Start-Up Spare Parts	**Required**			
9.15	Manufacturer Recommended Two-Year Spare Parts	**Not Required**			
10	**Drawings Supplied as part of this Specification**				

Project: GE/Southern/Linde Advanced NGCC Integration
Kiewit #: 20041223
Revision: 0

SPECIFICATION
13.8kV Medium Voltage Metal-Clad Switchgear

Item	Description	Specified Data	By Bidder	See Note	Rev. #
10.01	General Arrangement	**Not Included**			
10.02	Electrical One-Line	**Included**			
10.03	Equipment Layout	**Included**			
10.04	Typical Schematics	**Not Included**			
11	**Required Production Documentation (not limited to the list below)**	Weeks after NTP (unless noted otherwise)			
11.01	Outline/General Arrangement with overall dimensions, NTE weights, anchorage requirements	6			
11.02	Electrical One-Line and Three-Line Diagram	6			
11.03	Typical Schematics including terminal numbers	6			
11.04	Heat rejection data	6			
11.05	Seismic Certification (if applicable)	8			
11.06	O&M Manuals - Standard 3-ring binder (follow enclosure contract schedule if purchased under the same contract)	4 weeks after delivery			
11.07	# of Proof copies required - 4	N/A			
11.08	# of Final copies required - 8	N/A			
11.09	# of CD's required - 8	N/A			
11.10	Special O&M Manual requirements - None	N/A			
12	**Testing requirements**				
12.01	Minimum number of factory acceptance tests Seller is expected to support	One per every two MV lineups			
12.02	Expected duration of each acceptance test	5 Days			
12.03	Basic tests to include Seller is expected to support:				
12.04	Continuity test on all control cables with required documentation	Include			
12.05	Seller to apply voltage and function test all installed equipment including multi-function relays, lock out relays, test switches, racking mechanisms, lights, breakers, etc.	Include			
12.06	Point to Point wire checks including termination pull test to ensure cables are landed securely	Include			
12.07	Voltage transformer ratio tests	Include			
12.07	Current transformer ratio tests	Include			
12.08	Maintenance switch functionality testing (if applicable)	Include			
13	**Typical Payment Milestones**				
13.01	If part of overall enclosure package, see enclosure specification				
14	**Additional Data to be supplied by Bidder**				
14.01	Metal-Clad Switchgear				
14.02	Manufacturer				
14.03	Location				
14.04	Medium-Voltage Motor Control Center				
14.05	Manufacturer				
14.06	Location				
14.07	Medium-Voltage Disconnect Switches				
14.08	Manufacturer				
14.09	Location				
14.10	Overall Dimensions (Length x Width x Height) inches (mm)				
14.11	Total Weight lbs (kg)				
14.12	Shipping Weight lbs (kg)				
14.13	Channel Sills Required (if so, Bidder to Provide)				
15	**Additional Requirements**				
15.01	- MV and LV switchgears, Motor Control Centers (MCCs) shall be equipped with intelligent (smart) devices providing control, status monitoring and protection functions through a redundant fiber-optic connection between equipment controllers and PCS				

Project: GE/Southern/Linde Advanced NGCC Integration
Kiewit #: 20041223
Revision: 0

SPECIFICATION
4.16kV Medium Voltage Metal-Clad Switchgear and Motor Control Assemblies

Item	Description	Specified Data	By Bidder	See Note	Rev. #
	Specification Summary				
This specification covers the design, fabrication, testing, and delivery of medium-voltage metal-clad switchgear, medium-voltage motor controllers, or integrated assembly with both medium-voltage metal-clad switchgear and medium-voltage motor controllers. All having the ratings and accessories as specified herein.					
1	**Lineup General Requirements**				
1.01	Lineup Name	See One-Line			
1.02	Lineup Tag	See One-Line			
1.03	Installation Location	Indoors in Pre-Package Enclosure			
1.04	Enclosure Rating	NEMA 1			
1.05	Nominal Voltage Class (kV)	4.16			
1.06	Configuration	3-Phase, 3-Wire			
1.07	System Grounding				
1.08	Type	Low Resistance Grounded			
1.09	Current	400 Amps			
1.10	Grounding Equipment Location	External Provided by Others			
1.11	Minimum Interrupting Current Capability (kA rms sym.) (K=1)	25			
1.12	Arc-resistant Construction	Not Required			
1.13	Minimum Arcing Current Rating	>= Rating Interrupting Current			
1.14	Minimum Rated Arcing Duration	0.5 seconds			
1.15	Arc-flash Plenum	Not Required			
1.16	Configuration	Two High			
1.17	Main Bus				
1.18	Minimum Current Capability (A rms)	See One-Line			
1.19	Material and Plating	Copper with Silver Plating			
1.20	Insulated Busbars	Required			
1.21	Neutral Bus	Neutral Bus Not Required			
1.22	Ground Bus, Full Length				
1.23	Material and Plating	Copper with Tin Plating			
1.24	Minimum Size	1/4 x 2 inch			
1.25	Incoming Line Section				
1.26	Connection	Top Entry			
1.27	Conductor Type	Cable Bus			
1.28	Surge Arresters	N/A			
1.29	Outgoing Feeders				
1.30	Connection	Bottom Entry			
1.31	Conductor Type	Cable			
1.32	Surge Arresters	N/A			
1.33	Control Cable Entry	Top and Bottom Entry			
1.34	Rear Doors	Lockable			
1.35	Front Doors	Lockable			
1.36	Compartment Space Heaters	Each Section			
1.37	Rated Voltage	240VAC			
1.38	Energization Voltage	120VAC			
1.39	Thermostats	One per Line Up			
1.40	Lights and Receptacles				
1.41	Lights, Fluorescent or LED, 120 VAC	Not Required			
1.42	Receptacles, Duplex 120 VAC	Not Required			
1.43	Power Source	External Provided by Others			
1.44	Terminal Blocks				
1.45	Current Transformers	Shorting Type			
1.46	Voltage Transformers	Marathon or Equal			
1.47	Power (Low Voltage)	Marathon or Equal			
1.48	Control	Marathon or Equal			
2	**Control Power Requirements**				
2.01	Switchgear Breakers				
2.02	Trip	125VDC			
2.03	Close	125VDC			
2.04	Spring Charging Motor	125VDC			
2.05	Protection Relays	125VDC			
2.06	Contactors				
2.07	Coil	125VDC			
2.08	Protection Relays	125VDC			
2.09	Disconnect Switch	Not Applicable			
3	**Metal-Clad Switchgear Requirements**				
3.01	Standard - Latest Revisions	IEEE C37.20.2, IEEE C37.06			
3.02	Interrupter Insulating Medium	Vacuum			
3.03	Removal	Horizontal Drawout			
3.04	Arrangement	Two Breakers per Vertical Section			
3.05	Maximum Rated Interrupting Time (Cycles)	Manufacturer's Standard			
3.06	Maximum Rated Closing Time (Cycles)	Manufacturer's Standard			
3.07	Feeder Breaker Quantities				
3.08	1200A	See One Line			
3.09	2000A	See One Line			
3.10	3000A	See One Line			
3.11	4000A	See One Line			
3.12	Quantity of Trip Coils per Each Breaker	One			
3.13	Trip Coil Monitoring	Required			
3.14	Auxiliary Contacts				
3.15	Spare Position Status Auxiliary Contacts	2 'a' and 2 'b'			
3.16	Spare Stationary Position Status Contacts (aka MOC)	4 'a' and 4 'b'			

3.17	Spare Connection Status Contacts (aka TOC)	2 N.O. and 2 N.C.	
3.18	Indicating Lights		
3.19	Open Status	Required - Green LED	
3.20	Closed Status	Required - Red LED	
3.21	Control Switch	Required - Control in Test Position Only	
4	**Medium-Voltage Disconnect Switch Requirements**		
4.01	Standard - Latest Revision	N/A	
4.02	Switch Type	N/A	
4.03	Operator	N/A	
4.04	Mechanical Interlocks with Compartment Door	N/A	
4.05	Quantity and Continuous Current Rating	N/A	
4.06	Fuses	N/A	
4.07	Spare Position Status Auxiliary Contacts	N/A	
4.08	Indicating Lights		
4.09	Open Status	N/A	
4.10	Closed Status	N/A	
4.11	Control Switch	N/A	
5	**Medium Voltage Motor Control Center Requirements**		
5.01	Standard - Latest Revision	NEMA ICS3	
5.02	Interrupter Insulating Medium	Vacuum	
5.03	NEMA E2 Fused FVNR Motor Controller Quantities		
5.04	400A Drawout	See One-Line	
5.05	800A Drawout	See One-Line	
5.06	NEMA E2 Fused 2-Speed FVNR Motor Controller Quantities		
5.07	400A Drawout	N/A	
5.08	Fused Mechanically-Latched Contactor Quantities		
5.09	400A Drawout	N/A	
5.10	800A Drawout	N/A	
5.11	Auxiliary Contacts		
5.12	Spare Position Status Auxiliary Contacts	2 'a' and 2 'b'	
5.13	Spare Mechanism-Operated Contacts (MOC)	4 'a' and 4 'b'	
5.14	Spare Truck-Operated Contacts (TOC)	2 N.O. and 2 N.C.	
5.15	Indicating Lights		
5.16	Open Status	Required - Green LED	
5.17	Closed Status	Required - Red LED	
5.18	Test Pushbutton	Required - Control in Test Position Only	
5.19	Emergency Stop Pushbutton	Manufacturer's Standard	
6	**Instrument Transformer Requirements**		
6.01	CT Relaying Accuracy Class	Best Possible for Each Application	
6.02	Voltage Transformers		
6.03	Type	Withdrawable	
6.04	Accuracy Class	0.3 WXY, 1.2Z	
6.05	Each Bus	3-Phase Set Wye-Wye Connected	
6.06	Incoming Side of Each Main	1-Phase B-N Connected	
6.07	Current Transformers		
6.08	Relaying Accuracy Class	Best Possible for Available Space	
6.09	3-Phase Set of CTs	As Required	
6.10	Zero-Sequence CTs		
6.11	Location(s)	Each Feeder	
6.12	Ratio	50:5	
7	**Relay and Metering Requirements**		
7.01	Main/Tie Protection	SEL-751	
7.02	Voltage Input	Required	
7.03	Sync-check Function	Not Required	
7.04	Undervoltage Function	Required	
7.05	SUS Transformer Protection - Primary (located in switchgear)	SEL-751	
7.06	Quantity	1	
7.07	Voltage Input	Required	
7.08	Overexcitation Protection Function	Not Required	
7.09	Lockout Relay associated with 751	Required	
7.10	SUS Transformer Protection - Secondary (located in switchgear)	N/A	
7.11	Quantity	N/A	
7.12	Voltage Input	N/A	
7.13	Overexcitation Protection Function	N/A	
7.14	Lockout Relay associated with 751	N/A	
7.15	Motor Feeder Protection	SEL-710	
7.16	Voltage Input	Required	
7.17	Winding RTD Temperature Input	Required - 6 RTDs	
7.18	Bearing RTD Temperature Input	Required - 2 RTDs	
7.19	Ambient RTD Temperature Input	Required	
7.20	Non-Motor Feeder Protection	SEL-751A	
7.21	Voltage Input	Required	
7.22	Lockout Relays		
7.23	Location(s)	Main Breakers and each SUS Relay	
7.24	Manufacturer/Model	Electroswitch Series 24	
7.25	Integral Indicating Lights (LED)	Coil Monitoring and Lockout Tripped	
7.26	Separate Indicating Lights (LED)	Not Required	
7.27	IEC 61850 Communication Required with Each Relay	Not Required	
7.28	Arc-Flash Fiber Optic Detection Scheme	Not Required	
7.29	Differential Protection Scheme, Including CTs	As Required for Motors per E1	
7.30	Zone-Selective Interlocking Scheme	Not Required	
7.31	Maintenance Switch Scheme for Lineup, including Arming Light and Padlockable Switch	Required	
7.32	GPS Clock	Required	
7.33	IRIG-B Signal Distribution	Required	
7.34	Metering		
7.35	Location(s)	Not Required	
7.36	Grade	N/A	
7.37	Manufacturer/Model Number	N/A	

7.38	Measured Quantities	N/A	
7.39	Datalink Requirements - Bidder to provide all equipment (media converters, protocol translation, multiplexing, etc.) to provide one external interface for communication datalink		
7.40	Protocol	TCP/IP	
7.41	Media	Cat6	
8	**Wiring and Termination Requirements**		
8.01	Wire Type	Type SIS	
8.02	Minimum Conductor Sizes for Internal Wiring		
8.03	Current Transformer Circuits	#10 AWG	
8.04	Voltage Transformer Circuits	#12 AWG	
8.05	Power	#12 AWG	
8.06	Instrumentation	#16 AWG	
8.07	Labeling	Opposite End and Ckt name	
8.08	Terminal Lugs		
8.09	Current Transformer Circuits	Ring Tongue	
8.10	Voltage Transformer Circuits	Ring Tongue	
8.11	Power (Low Voltage)	Ring Tongue	
8.12	Control	Ring Tongue	
9	**Additional Items and Spare Parts**		
9.01	Test Cabinet for Operating Breaker Outside Compartment	Required	
9.02	Lift Truck	Required	
9.03	Mimic Bus	Not Required	
9.04	Remote Racking System	Yes - Portable	
9.05	IR Inspection Ports	Not Required	
9.06	Grounding and Test Device(s)	Yes	
9.07	Spare Parts		
9.08	Power Fuses, Two (2) of Each Size	Not Required	
9.09	Five (5) Spare LEDs of Each Color	Not Required	
9.10	Control Circuit Fuses, 50% Spare	Not Required	
9.11	One Set of Spare VT Primary Fuses (2 Total)	Not Required	
9.12	One Set of Spare VT Secondary Fuses	Not Required	
9.13	One Quart Touch Up Paint	Required	
9.14	Manufacturer Recommended Start-Up Spare Parts	Required	
9.15	Manufacturer Recommended Two-Year Spare Parts	Not Required	
10	**Drawings Supplied as part of this Specification**		
10.01	General Arrangement	Not Included	
10.02	Electrical One-Line	Included	
10.03	Equipment Layout	Included	
10.04	Typical Schematics	Not Included	
11	**Required Production Documentation (not limited to the list below)**	Weeks after NTP (unless noted otherwise)	
11.01	Outline/General Arrangement with overall dimensions, NTE weights, anchorage requirements	6	
11.02	Electrical One-Line and Three-Line Diagram	6	
11.03	Typical Schematics including terminal numbers	6	
11.04	Heat rejection data	6	
11.05	Seismic Certification (if applicable)	8	
11.06	O&M Manuals - Standard 3-ring binder (follow enclosure contract schedule if purchased under the same contract)	4 weeks after delivery	
11.07	# of Proof copies required - 4	N/A	
11.08	# of Final copies required - 8	N/A	
11.09	# of CD's required - 8	N/A	
11.10	Special O&M Manual requirements - None	N/A	
12	**Testing requirements**		
12.01	Minimum number of factory acceptance tests Seller is expected to support	One per every two MV lineups	
12.02	Expected duration of each acceptance test	5 Days	
12.03	Basic tests to include Seller is expected to support:		
12.04	Continuity test on all control cables with required documentation	Include	
12.05	Seller to apply voltage and function test all installed equipment including multi-function relays, lock out relays, test switches, racking mechanisms, lights, breakers, etc.	Include	
12.06	Point to Point wire checks including termination pull test to ensure cables are landed securely	Include	
12.07	Voltage transformer ratio tests	Include	
12.07	Current transformer ratio tests	Include	
12.08	Maintenance switch functionality testing (if applicable)	Include	
13	**Typical Payment Milestones**		
13.01	If part of overall enclosure package, see enclosure specification		
14	**Additional Data to be supplied by Bidder**		
14.01	Metal-Clad Switchgear		
14.02	Manufacturer		
14.03	Location		
14.04	Medium-Voltage Motor Control Center		
14.05	Manufacturer		
14.06	Location		
14.07	Medium-Voltage Disconnect Switches		
14.08	Manufacturer		
14.09	Location		
14.10	Overall Dimensions (Length x Width x Height) inches (mm)		
14.11	Total Weight lbs (kg)		
14.12	Shipping Weight lbs (kg)		
14.13	Channel Sills Required (if so, Bidder to Provide)		

15	Additional Requirements	
15.01	- MV and LV switchgears, Motor Control Centers (MCCs) shall be equipped with intelligent (smart) devices providing control, status monitoring and protection functions through a redundant fiber-optic connection between equipment controllers and PCS	

Project: GE/Southern/Linde Advanced NGCC Integration
Kiewit #: 20041223
Revision: 0

SPECIFICATION
LV Switchgear

Item	Description	Specified Data	By Bidder	See Note	Rev. #
	Specification Summary				
This specification covers the design, fabrication, testing and delivery of low voltage metal-enclosed switchgear. All having the ratings and accessories as specified herein.					
1	**Lineup General Requirements**				
1.01	Lineup Name	See One Line			
1.02	Lineup Tag	See One Line			
1.03	Arrangement	Double Ended (Main-Tie-Main)			
1.04	Installation Location	Indoors in Pre-Package Enclosure			
1.05	Enclosure Rating	NEMA 1			
1.06	Color	Manufacturer's Standard			
1.07	Nominal Operating Voltage (V rms)	480			
1.08	Maximum Rated Voltage (V rms)	600			
1.09	Configuration	3-Phase, 3-Wire			
1.10	System Grounding				
1.11	Type	High Resistance Grounded			
1.12	System Grounding Equipment Location	Integral with Switchgear			
1.13	Minimum Interrupting Current Capability (kA rms sym)	See One Line			
1.14	Arc-resistant Construction	Not Required			
1.15	Minimum Arcing Current Rating	>= Rating Interrupting Current			
1.16	Minimum Rated Arcing Duration	0.5 seconds			
1.17	Arc-flash Plenum	Not Required			
1.18	Main Bus				
1.19	Minimum Current Capability (A rms)	See One Line			
1.20	Material and Plating	Copper with Silver Plating			
1.21	Insulated Busbars	Required			
1.22	Neutral Bus (4-wire system only)	N/A			
1.23	Ground Bus, Full Length				
1.24	Material and Plating	Copper with Tin Plating			
1.25	Minimum Size	1/4 x 2 inch			
1.26	Incoming Line Section				
1.27	Connection	Top Entry			
1.28	Conductor Type	Cable Bus			
1.29	Surge Arresters	N/A			
1.30	Outgoing Feeders				
1.31	Connection	Top and Bottom Entry			
1.32	Conductor Type	Cable			
1.33	Surge Arresters	N/A			
1.34	Control Cable Entry	Top and Bottom Entry			
1.35	Rear Doors	Lockable			
1.36	Front Doors	Lockable			
1.37	Compartment Space Heaters	Each Section			
1.38	Rated Voltage	240VAC			
1.39	Energization Voltage	120VAC			
1.40	Thermostats	One per Line Up			
1.41	Lights and Receptacles				
1.42	Lights, Fluorescent or LED, 120 VAC	Not Required			
1.43	Receptacles, Duplex 120 VAC	Not Required			
1.44	Power Source	External Provided by Others			
2	**Control Power Requirements**				
2.01	Trip	125VDC			
2.02	Close	125VDC			
2.03	Spring Charging Motor	125VDC			
2.04	Protection Relays	125VDC			
3	**Metal-Clad Switchgear Requirements**				
3.01	Standard(s) - Latest Revision	IEEE C37.13, C37.16, C37.17, C37.20.1			
3.02	Interrupter Insulating Medium	Air			
3.03	Removal	Horizontal Drawout			
3.04	Maximum Rated Interrupting Time (Cycles)	Manufacturer's Standard			
3.05	Maximum Rated Closing Time (Cycles)	Manufacturer's Standard			
3.06	Main Breaker Quantities				
3.07	Electrically-Operated	See One Line			
3.08	Tie Breaker Quantities				
3.09	Electrically-Operated	See One Line			
3.10	Feeder Breaker Quantities				
3.11	Electrically-Operated	See One Line			
3.12	Trip and Close Coil Monitoring	Required			
3.13	Auxiliary Contacts				
3.14	Spare Position Status Auxiliary Contacts	2 'a' and 2 'b'			
3.15	Spare Stationary Position Status Contacts (aka MOC) - or Equal	4 'a' and 4 'b'			
3.16	Spare Connection Status Contacts (aka TOC)	2 N.O. and 2 N.C.			
3.17	Indicating Lights				
3.18	Open Status	Required - Green LED			
3.19	Closed Status	Required - Red LED			
3.20	Control Switch	Required - Control in Test Position Only			

4	Instrument Transformer Requirements		
4.01	Voltage Transformers		
4.02	Type	Withdrawable	
4.03	Accuracy Class	0.3 WXY, 1.2Z	
4.04	Each Bus	3-Phase Set Open-Delta Connected	
4.05	Incoming Side of Each Main	1-Phase A-B Connected	
4.06	Current Transformers		
4.07	Relaying Accuracy Class	Best Possible for Available Space	
4.08	3-Phase Set of CTs	As Required	
5	Protection and Metering Requirements		
5.01	Solid State Trip Units	Included	
5.02	Microprocessor-based Tripping System with Current Sensors	Required	
5.03	Adjustable Phase Time Overcurrent Protection Functions	Required	
5.04	Adjustable Ground Time Overcurrent Fault Protection	Required	
5.05	Adjustable Maintenance Switch Function	Required	
5.06	Integral Metering and Display	I/V/W/VAR/Freq/PF	
5.07	Zone-Selective Interlocking Scheme	Required	
5.08	Datalink Interface	Required	
5.09	Main and Tie Sync-Check	SEL-751A	
5.10	Fiber-Optic Arc Flash Detection System, Including CTs	Not Required	
5.11	Differential Protection System, Including CTs	Not Required	
5.12	Maintenance Switch Scheme - Padlockable Switch and LED Armed Status Indicating Light	Required	
5.13	Metering		
5.14	Location(s)	Not Required	
5.15	Grade	N/A	
5.16	Manufacturer/Model Number	N/A	
5.17	Measured Quantities	N/A	
5.18	Datalink Requirements - Bidder to provide all equipment (media converters, protocol translation, multiplexing, etc.) to provide one external interface for communication datalink		
5.19	Protocol	TCP/IP	
5.20	Media	Cat6	
6	Wiring and Termination Requirements		
6.01	Wire Type	Type SIS	
6.02	Minimum Conductor Sizes for Internal Wiring		
6.03	Current Transformer Circuits	#10 AWG	
6.04	Voltage Transformer Circuits	#12 AWG	
6.05	Power	#12 AWG	
6.06	Instrumentation	#16 AWG	
6.07	Labeling	Cable Number and Opposite End	
6.08	Terminal Blocks		
6.09	Current Transformers	Shorting Type	
6.10	Voltage Transformers	Marathon or Equal	
6.11	Power (Low Voltage)	Marathon or Equal	
6.12	Control	Marathon or Equal	
6.13	Terminal Lugs		
6.14	Current Transformer Circuits	Ring Tongue	
6.15	Voltage Transformer Circuits	Ring Tongue	
6.16	Auxiliary Power	Ring Tongue	
6.17	Control	Ring Tongue	
7	Additional Items and Spare Parts		
7.01	Test Cabinet for Operating Breaker Outside Compartment	Required	
7.02	Lift Truck	Required	
7.03	Mimic Bus	Not Required	
7.04	Remote Racking System	Not Required	
7.05	IR Inspection Ports	Not Required	
7.06	Spare Parts		
7.07	Five (5) Spare LEDs of Each Color	Required	
7.08	Control Circuit Fuses, 50% Spare	Required	
7.09	One Set of Spare VT Primary Fuses (2 Total)	Required	
7.10	One Set of Spare VT Secondary Fuses	Required	
7.11	One Quart Touch Up Paint	Required	
7.12	Manufacturer Recommended Start-Up Spare Parts	Required	
7.13	Manufacturer Recommended Two-Year Spare Parts	Not Required	
8	Required Production Documentation (not limited to the list below)	Weeks after NTP (unless noted otherwise)	
8.01	Outline/General Arrangement with overall dimensions, NTE weights, anchorage requirements	6	
8.02	Electrical One-Line and Three-Line Diagram	6	
8.03	Typical Schematics including terminal numbers	6	
8.04	Heat rejection data	6	
8.05	Seismic Certification (if applicable)	8	
8.06	O&M Manuals - Standard 3-ring binder	4 weeks after delivery	
8.07	# of Proof copies required - 4	N/A	
8.08	# of Final copies required - 8	N/A	
8.09	# of CD's required - 8	N/A	
8.10	Special O&M Manual requirements - None	N/A	
9	Testing requirements		
9.01	Minimum number of factory acceptance tests Seller is expected to support	One per every two LVSWGR lineups	
9.02	Expected duration of each acceptance test	1 Day	
9.03	Basic tests to include Seller is expected to support:		
9.04	Continuity test on all control cables with required documentation	Include	
9.05	Seller to apply voltage and function test all installed equipment	Include	
9.06	Point to Point wire checks including termination pull test to ensure	Include	

10	Typical Payment Milestones		
10.01	If part of overall enclosure package, see enclosure specification		
11	Drawings Supplied as part of this Specification		
11.01	General Arrangement	Not Included	
11.02	Electrical One-Line	Included	
11.03	Equipment Layout	Included	
11.04	Typical Schematics	Not Included	
12	Additional Data to be supplied by Bidder		
12.01	Manufacturer		
12.02	Manufacturing Location		
12.03	Overall Dimensions (Length x Width x Height)		
12.04	Total Weight (lbs)		
12.05	Shipping Weight (lbs)		
13	Additional Requirements		
13.01			
13.02			
13.03			
13.04			
13.05			
13.06			

Project: GE/Southern/Linde Advanced NGCC Integration
Kiewit #: 20041223
Revision: 0

SPECIFICATION
Low-Voltage Motor Control Centers

Item	Description	Specified Data	By Bidder	See Note	Rev. #
	Specification Summary				
	This specification covers the design, fabrication, testing and delivery of 480V Motor Control Centers having the ratings and accessories as specified herein.				
1	**Lineup General Requirements**				
1.01	Lineup Name	See Load List			
1.02	MCC Tag	See One-Line			
1.03	Installation Location	Indoors in Pre-Package Enclosure			
1.04	Installation Arrangement	See Equipment Layout			
1.05	Nominal Rated Voltage (V rms)	480			
1.06	Maximum Rated Voltage (V rms)	600			
1.07	Number of Phases/Configuration	3-Phase 3-Wire			
1.08	Frequency (Hz)	60			
1.09	Enclosure Rating	NEMA 1			
1.10	Color	Manufacturer's Standard			
1.11	Minimum Interrupting Current Capability (kA rms symmetrical)	65			
1.12	Minimum Withstand Time for Short-Circuit Current (cycles)	10			
1.13	Minimum Main Horizontal Bus Ampacity (A rms)	See Load List			
1.14	Minimum Vertical Bus Ampacity (A rms)	300			
1.15	Neutral bus (4-wire system only)	N/A			
1.16	Bus material	Tin-Plated Copper			
1.17	Incoming Line Section				
1.18	Protection Device	None - Main Lugs Only (MLO)			
1.19	Conductor Type	Cable			
1.20	Entry	Top or Bottom			
1.21	Outgoing Feeders				
1.22	Connection	Top and Bottom Entry			
1.23	Conductor Type	Cable			
1.21	Arc-resistant Construction	Not Required			
1.22	Minimum Arcing Current Rating	N/A			
1.23	Minimum Rated Arcing Duration	N/A			
1.24	Insulating barrier to separate unit compartments from vertical bus compartment, glass reinforced polyester with cutouts	Required			
1.25	Automatic Shutters	Required			
1.26	Copper ground bus extending full length of MCC	Required			
1.27	Wiring Method	NEMA Class I Type B			
1.28	Insulated Horizontal and Vertical Busbars	Required			
1.29	Vertical bus isolation barrier	Required			
1.30	Each unit equipped with side-mount pull-apart terminal blocks rated 600V	Required			
1.31	Padlocking facilities to allow locking the disconnect in OFF position with up to three padlocks with door open or closed	Required			
1.32	Metering				
1.33	Incomer: Microprocessor based three-phase power monitor displaying phase currents, voltage, L-L, L-N, power-real and reactive apparent, power factor, frequency, energy: watthours, var hours VA hours (on MCC incomer section w/ necessary instrument transformers) (meter to have Mod Bus communication capability), including any required VTs and CTs	Not Required			
1.34	Door mounted microprocessor based meter as described above in smaller format for mounting on individual starter/units	Not Required			
2	**Motor Controller and Contactor Requirements**				
2.01	Method of short circuit protection (adjustable)	Motor Circuit Protector/Circuit Breaker			
2.02	Starter unit	Withdrawable			
2.03	Overload Relays, Three Phase, adjustable (if specified to be bimetallic, furnish with interchangeable heaters)	Solid-State Adjustable			
2.04	Spare Auxiliary Contacts Required	2 NO and 2 NC			
2.05	Control Power Transformers, Single Phase, Voltage Ratio of 480/120, Minimum Rating of 150VA for Size 1 and 2, 300VA for Sizes 3 and Higher	Required			
2.06	"Hand-Off-Auto" switches	Not Required			
2.07	Red "Run/On" and Green "Stopped/Off" lamps + additional lights for any 2-speed or reversing starters	Required			

Project: GE/Southern/Linde Advanced NGCC Integration
Kiewit #: 20041223
Revision: 0

SPECIFICATION
Low-Voltage Motor Control Centers

Item	Description	Specified Data	By Bidder	See Note	Rev. #
3	**Quantity Buildup**				
3.01	Motor Starters				
3.02	Full-Voltage Non-Reversing (FVNR)				
3.03	Size 1 (10hp)	**See Load List**			
3.04	Size 2 (25hp)	**See Load List**			
3.05	Size 3 (50hp)	**See Load List**			
3.06	Size 4 (100hp)	**See Load List**			
3.07	Size 5 (200hp)	**See Load List**			
3.08	Size 6 (400hp)	**See Load List**			
3.09	Full-Voltage Reversing (FVR)				
3.10	Size 1 (10hp)	**See Load List**			
3.11	Size 2 (25hp)	**See Load List**			
3.12	Full-Voltage 2-Speed (2-Winding)				
3.13	Size 4 (100hp)	**See Load List**			
3.14	Size 5 (200hp)	**See Load List**			
3.15	Size 6 (400hp)	**See Load List**			
3.16	Integral Variable Frequency Drive (VFD)				
3.17	Size 1 (10hp)	**See Load List**			
3.18	Size 2 (25hp)	**See Load List**			
3.19	Size 3 (50hp)	**See Load List**			
3.20	Size 4 (100hp)	**See Load List**			
3.21	Size 5 (200hp)	**See Load List**			
3.22	Size 6 (400hp)	**See Load List**			
3.23	Size 7 (600hp)	**See Load List**			
3.24	Contactors				
3.25	Size 1 (27 Arms)	**See Load List**			
3.26	Size 2 (45 Arms)	**See Load List**			
3.27	Size 3 (90 Arms)	**See Load List**			
3.28	Size 4 (135 Arms)	**See Load List**			
3.29	Size 5 (270 Arms)	**See Load List**			
3.30	Size 6 (540 Arms)	**See Load List**			
3.31	Circuit Breakers				
3.32	50A	**See Load List**			
3.33	100A	**See Load List**			
3.34	150A	**See Load List**			
3.35	225A	**See Load List**			
3.36	400A	**See Load List**			
3.37	Transformer and Panelboard				
3.38	Transformer Type	**See Load List**			
3.39	Transformer Voltage Rating	**See Load List**			
3.40	Transformer kVA Rating	**See Load List**			
3.41	Transformer Winding Material	**See Load List**			
3.42	Panelboard - Main Breaker	**See Load List**			
3.43	Panelboard - Number of Positions	**See Load List**			
4	**Options**				
4.01	Ground bus in each vertical wireway	**Required**			
4.02	Ground fault relays on all outgoing motor and breaker feeds	**Not Required**			
4.03	Vendor to reserve one vertical section for installation by Vendor of Purchaser furnished PLC or DCS I/O rack	**Not Required**			
4.04	Remote Racking	**Not Required**			
5	**Spare Parts**				
5.01	Power Fuses, Two (2) of Each Size, if applicable	**Not Required**			
5.02	Pilot Lights, Five (5) Spare of Each Color	**Not Required**			
5.03	Control Circuit Fuses, Two (2) Each of CPT Primary Fuses	**Not Required**			
5.04	Control Circuit Fuses, Two (2) Each of CPT Secondary Fuses	**Not Required**			
5.05	Two (2) spare contactors of each size used	**Not Required**			
5.06	Two (2) spare breakers or motor circuit protectors of each size	**Not Required**			
5.07	One (1) spare of each size starter	**Required**			
5.08	One Quart Touch Up Paint	**Required**			
5.09	Manufacturer Recommended Start-Up Spare Parts	**Required**			
5.10	Manufacturer Recommended Two-Year Spare Parts	**Not Required**			
6	**Drawings Supplied as part of this Specification**				
6.01	General Arrangement	**Not Included**			
6.02	Electrical One-Line	**Included**			
6.03	Equipment Layout	**Included**			
6.04	Typical Schematics	**Not Included**			

Project: GE/Southern/Linde Advanced NGCC Integration
Kiewit #: 20041223
Revision: 0

SPECIFICATION
Low-Voltage Motor Control Centers

Item	Description	Specified Data	By Bidder	See Note	Rev. #
7	**Required Production Documentation (not limited to the list below)**	Weeks after NTP (unless noted otherwise)			
7.01	Outline/General Arrangement with overall dimensions, NTE weights, anchorage requirements	6			
7.02	Electrical One-Line	6			
7.03	Typical Schematics	6			
7.04	Heat rejection data	6			
7.05	Seismic Certification (if applicable)	8			
7.06	O&M Manuals - Standard 3-ring binder	4 weeks after delivery			
7.07	# of Proof copies required - 4	N/A			
7.08	# of Final copies required - 8	N/A			
7.09	# of CD's required - 8	N/A			
7.10	Special O&M Manual requirements - None	N/A			
8	**Additional Data to be supplied by Bidder**				
8.01	Overall Dimensions (Length x Width x Height) feet (m):				
8.02	Bill of Materials				
8.03	Shipping Weight lbs (Kg.):				
9	**Testing requirements**				
9.01	Minimum number of factory acceptance tests Seller is expected to support	One			
9.02	Expected duration of each acceptance test	2 Days			
9.03	Basic tests to include Seller is expected to support:				
9.04	Continuity test on all control cables with required documentation	Include			
9.05	Seller to apply voltage and function test all installed equipment	Include			
9.06	Point to Point wire checks including termination pull test to ensure cables are landed securely	Include			
10	**Typical Payment Milestones**				
10.01	If part of overall enclosure package, see enclosure specification				
11	**Additional Data to be supplied by Bidder**				
11.01	Overall Dimensions (Length x Width x Height) feet (m)				
11.02	Bill of Materials				
11.03	Shipping Weight lbs (Kg.):				
12	**Additional Comments**				
12.01	Motor starters shall be controlled by DCS (supplied by others) command (maintained) via Profibus simplex DP. Vendor to provide any interface devices that may be required to operate motor starters. Assume discrete 'start' and 'stop' signals will be coming from the DCS.				
12.02	Water treatment MCCs (WTT) will be shipped loose and housed in on site building construction.				
12.03	Provide indication of cable entry (bottom, top, or both) for 200HP 2 speed 1 winding starters (CTWR MCCs)				

APPENDIX A

OVERALL ONE-LINE DIAGRAMS

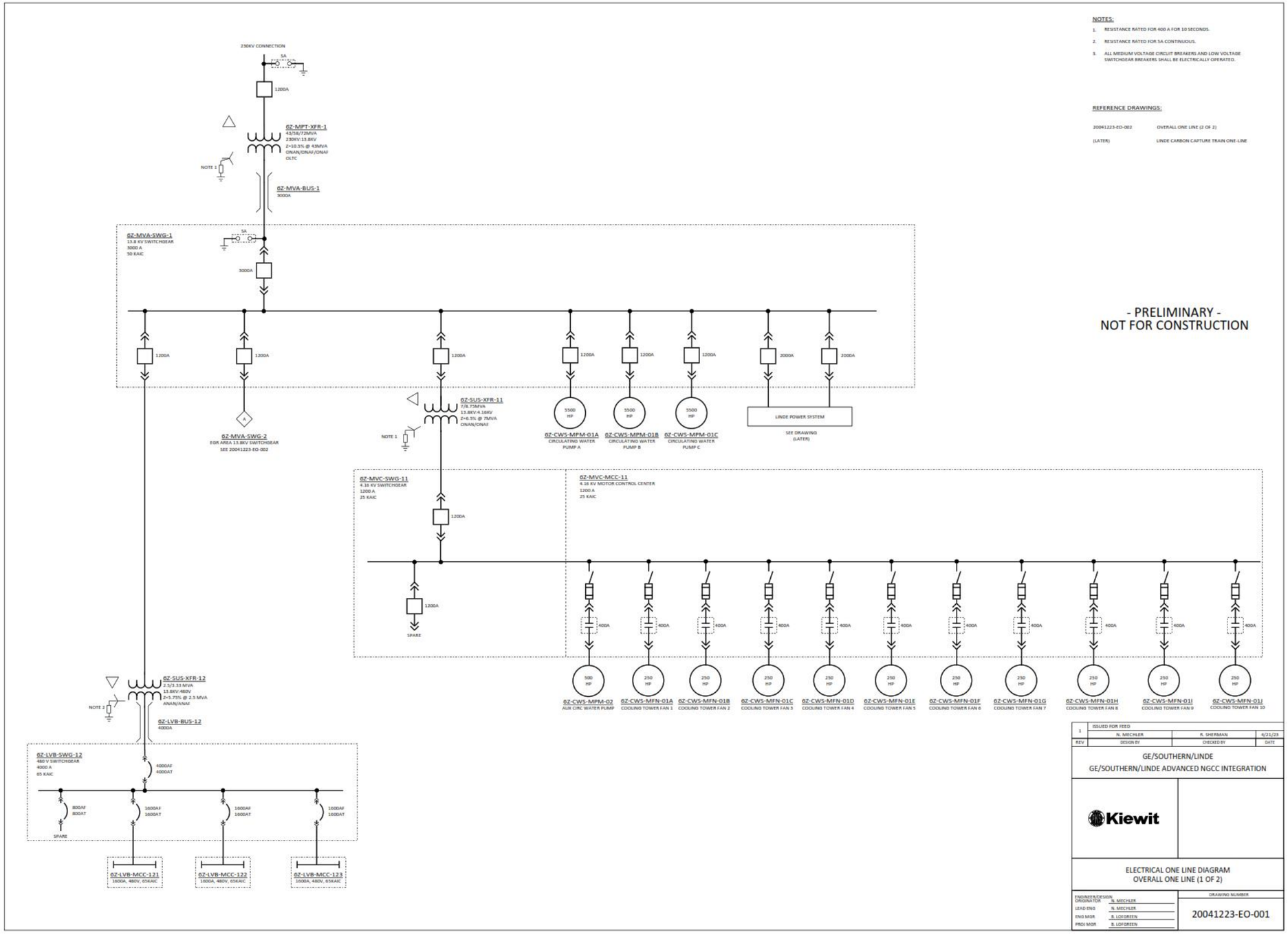
NOTES:
1. RESISTANCE RATED FOR 400 A FOR 10 SECONDS.
2. RESISTANCE RATED FOR 5A CONTINUOUS.
3. ALL MEDIUM VOLTAGE CIRCUIT BREAKERS AND LOW VOLTAGE SWITCHGEAR BREAKERS SHALL BE ELECTRICALLY OPERATED.
REFERENCE DRAWINGS:
20041223-EO-002 OVERALL ONE LINE (2 OF 2)
(LATER) LINDE CARBON CAPTURE TRAIN ONE-LINE
- PRELIMINARY -
NOT FOR CONSTRUCTION
230KV CONNECTION
6Z-MPT-XFR-1
43/58/72MVA
230KV:13.8KV
Z=10.5% @ 43MVA
ONAN/ONAF/ONAF
OLTC
6Z-MVA-BUS-1
3000A
6Z-MVA-SWG-1
13.8 KV SWITCHGEAR
3000 A
50 KAIC
6Z-MVA-SWG-2
FOR AREA 13.8KV SWITCHGEAR
SEE 20041223-EO-002
6Z-SUS-XFR-11
7/8.75MVA
13.8KV-4.16KV
Z=6.5% @ 7MVA
ONAN/ONAF
6Z-CWS-MPM-01A
CIRCULATING WATER PUMP A
6Z-CWS-MPM-01B
CIRCULATING WATER PUMP B
6Z-CWS-MPM-01C
CIRCULATING WATER PUMP C
LINDE POWER SYSTEM
SEE DRAWING (LATER)
6Z-MVC-SWG-11
4.16 KV SWITCHGEAR
1200 A
25 KAIC
6Z-MVC-MCC-11
4.16 KV MOTOR CONTROL CENTER
1200 A
25 KAIC
SPARE
6Z-CWS-MFN-02
AUX CIRC WATER PUMP
6Z-CWS-MFN-01A
COOLING TOWER FAN 1
6Z-CWS-MFN-01B
COOLING TOWER FAN 2
6Z-CWS-MFN-01C
COOLING TOWER FAN 3
6Z-CWS-MFN-01D
COOLING TOWER FAN 4
6Z-CWS-MFN-01E
COOLING TOWER FAN 5
6Z-CWS-MFN-01F
COOLING TOWER FAN 6
6Z-CWS-MFN-01G
COOLING TOWER FAN 7
6Z-CWS-MFN-01H
COOLING TOWER FAN 8
6Z-CWS-MFN-01J
COOLING TOWER FAN 9
6Z-CWS-MFN-01J
COOLING TOWER FAN 10
6Z-SUS-XFR-12
2.5/3.33 MVA
13.8KV:480V
Z=5.75% @ 2.5 MVA
ANAN/ANAF
6Z-LVB-BUS-12
4000A
6Z-LVB-SWG-12
480 V SWITCHGEAR
4000 A
65 KAIC
SPARE
6Z-LVB-MCC-121
1600A, 480V, 65KAIC
6Z-LVB-MCC-122
1600A, 480V, 65KAIC
6Z-LVB-MCC-123
1600A, 480V, 65KAIC
1 ISSUED FOR FEED
N. MECHLER R. SHERMAN 4/21/23
REV DESIGN BY CHECKED BY DATE
GE/SOUTHERN/LINDE
GE/SOUTHERN/LINDE ADVANCED NGCC INTEGRATION
Kiewit
ELECTRICAL ONE LINE DIAGRAM
OVERALL ONE LINE (1 OF 2)
ENGINEER/DESIGN ORIGINATOR N. MECHLER
LEAD ENG N. MECHLER
ENG MGR B. LOFGREEN
PROJ MGR B. LOFGREEN
DRAWING NUMBER
20041223-EO-001

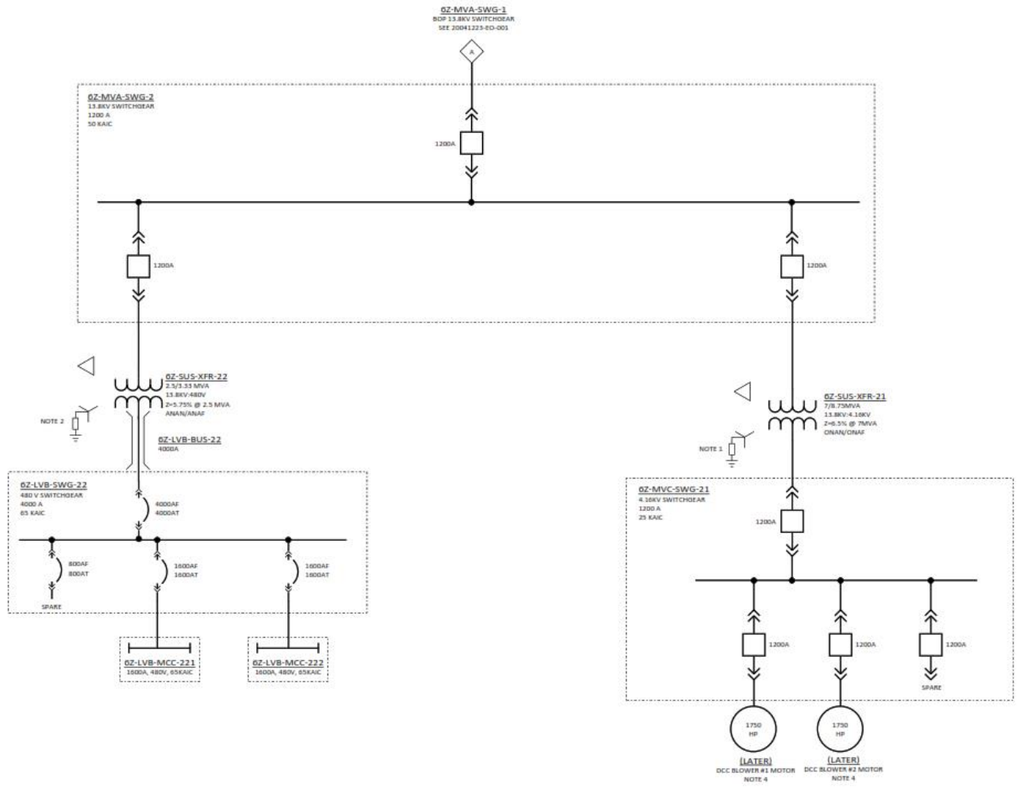

NOTES:

1. RESISTANCE RATED FOR 400 A FOR 10 SECONDS.
2. RESISTANCE RATED FOR 5A CONTINUOUS.
3. ALL MEDIUM VOLTAGE CIRCUIT BREAKERS AND LOW VOLTAGE SWITCHGEAR BREAKERS SHALL BE ELECTRICALLY OPERATED.
4. MOTOR SUPPLIED BY GE.

REFERENCE DRAWINGS:

20041223-EO-001	OVERALL ONE LINE (1 OF 2)
(LATER)	LINDE CARBON CAPTURE TRAIN ONE-LINE

- PRELIMINARY -
NOT FOR CONSTRUCTION

REV	DESIGN BY	CHECKED BY	DATE
1	ISSUED FOR FEED		
	N. MECHLER	N. SHERMAN	4/21/25

GE/SOUTHERN/LINDE
GE/SOUTHERN/LINDE ADVANCED NGCC INTEGRATION

Kiewit

ELECTRICAL ONE LINE DIAGRAM
OVERALL ONE LINE (2 OF 2)

ENGINEER/DESIGN ORDINATOR	N. MECHLER
LEAD ENG	N. MECHLER
ENG MGR	B. LOFGREEN
PROJ MGR	B. LOFGREEN

DRAWING NUMBER: 20041223-EO-002

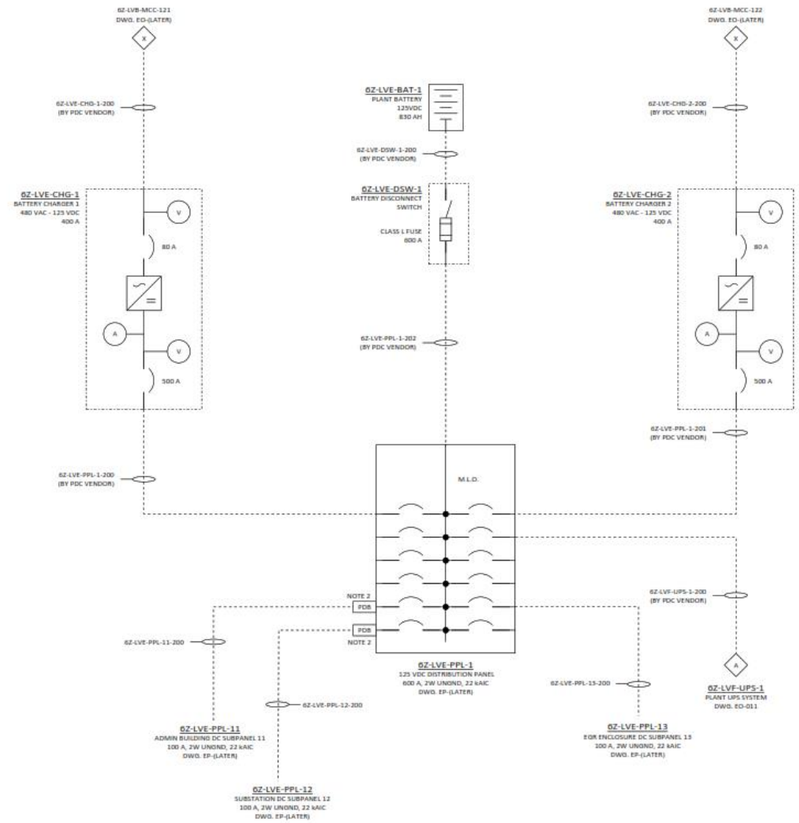

NOTES:

1. BREAKER RATINGS AND ADDITIONAL LOADS ARE LOCATED ON THE PANELBOARD DRAWINGS (LATER).
2. POWER DISTRIBUTION BLOCKS ARE LOCATED IN THE TOP SECTION OF SECTION 2 TO ACCOMODATE LUG REQUIREMENTS OF INCOMING CABLES.

REFERENCE DRAWINGS:

EE-002	ELECTRICAL ENGINEERING STANDARDS AND SYMBOLS LEGEND
EO-011	ELECTRICAL ONE LINE DIAGRAM PLANT UPS SYSTEM

LEGEND:

M.L.O.	MAIN LUG ONLY
FDB	POWER DISTRIBUTION BLOCK
A	DC AMMETER
V	DC VOLTMETER

- PRELIMINARY -
NOT FOR CONSTRUCTION

REV	DESIGN BY	CHECKED BY	DATE
0	ISSUED FOR FEED N. MECHLER	R. SHERMAN	4/21/23

GE/SOUTHERN/LINDE
GE/SOUTHERN/LINDE ADVANCED NGCC INTEGRATION

Kiewit

ELECTRICAL ONE LINE DIAGRAM
PLANT 125 VDC SYSTEM

ENGINEER/DESIGN ORIGINATOR	N. MECHLER
LEAD ENG	N. MECHLER
ENG MGR	B. LOFGREEN
PROJ MGR	B. LOFGREEN

DRAWING NUMBER
20041223-EO-010

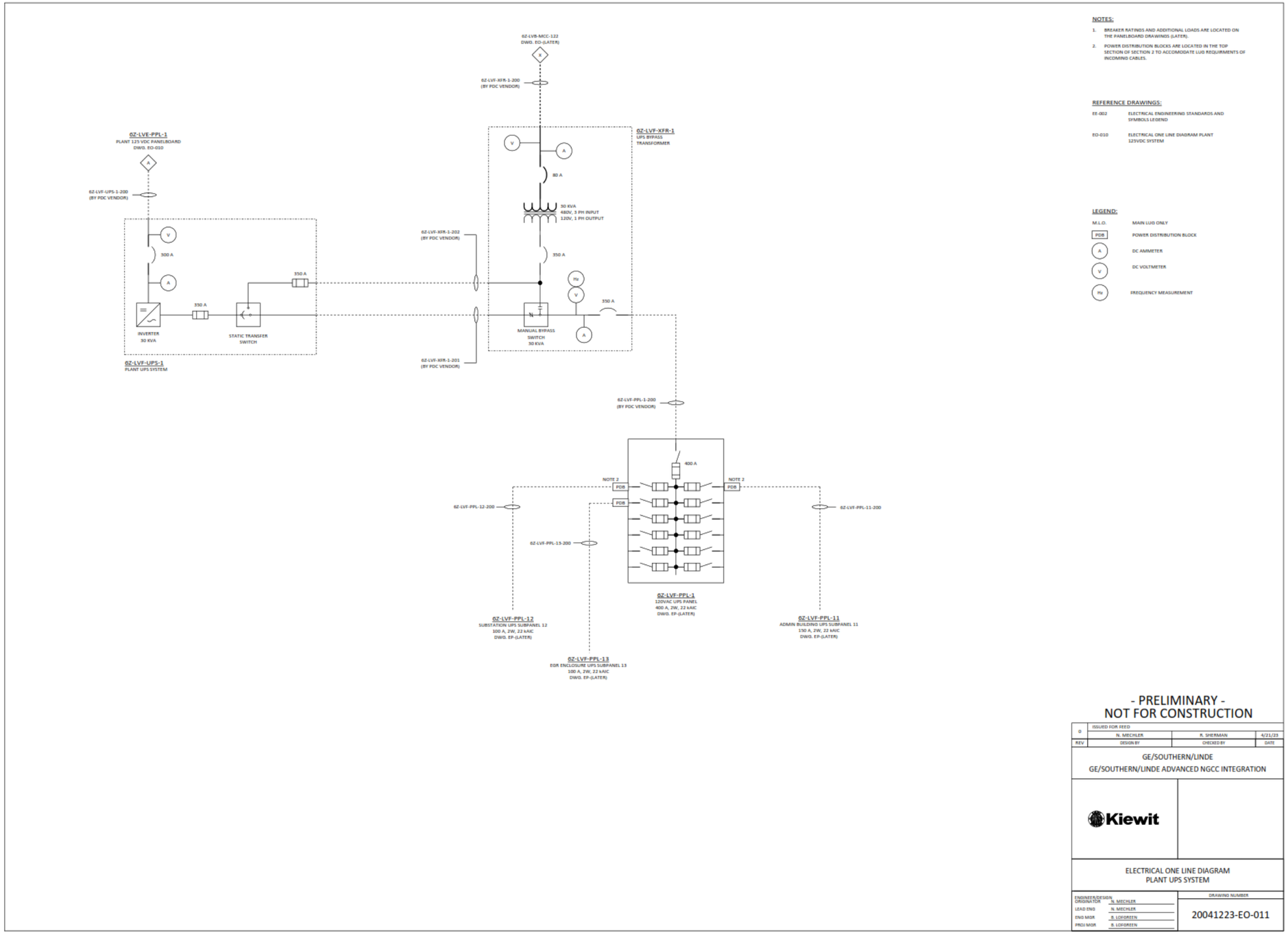

NOTES:

1. BREAKER RATINGS AND ADDITIONAL LOADS ARE LOCATED ON THE PANELBOARD DRAWINGS (LATER).
2. POWER DISTRIBUTION BLOCKS ARE LOCATED IN THE TOP SECTION OF SECTION 2 TO ACCOMODATE LUG REQUIRMENTS OF INCOMING CABLES.

REFERENCE DRAWINGS:

EE-002	ELECTRICAL ENGINEERING STANDARDS AND SYMBOLS LEGEND
EO-010	ELECTRICAL ONE LINE DIAGRAM PLANT 125VDC SYSTEM

LEGEND:

M.L.O.	MAIN LUG ONLY
PDB	POWER DISTRIBUTION BLOCK
A	DC AMMETER
V	DC VOLTMETER
Hz	FREQUENCY MEASUREMENT

- PRELIMINARY -
NOT FOR CONSTRUCTION

REV	DESIGN BY	CHECKED BY	DATE
0	ISSUED FOR FEED		
	N. MECHLER	R. SHERMAN	4/21/23

GE/SOUTHERN/LINDE

GE/SOUTHERN/LINDE ADVANCED NGCC INTEGRATION

Kiewit

ELECTRICAL ONE LINE DIAGRAM
PLANT UPS SYSTEM

ENGINEER/DESIGN ORIGINATOR	N. MECHLER
LEAD ENG	N. MECHLER
ENG MGR	B. LOFGREEN
PROJ MGR	B. LOFGREEN

DRAWING NUMBER

20041223-EO-011

APPENDIX B

ENCLOSURE LAYOUTS

LEGEND

- EQUIPMENT — PROVIDED AND INSTALLED BY SELLER
- EQUIPMENT — PROVIDED BY CONTRACTOR / INSTALL BY SELLER
- EQUIPMENT — PROVIDED AND INSTALLED BY CONTRACTOR
- EQUIPMENT — DEDICATED SPACE FOR FUTURE
- ELECTRICAL CLEARANCES
- PLATFORMS PROVIDED AND INSTALLED BY CONTRACTOR
- SHIPPING SPLIT

BOP ELECTRICAL ENCLOSURE

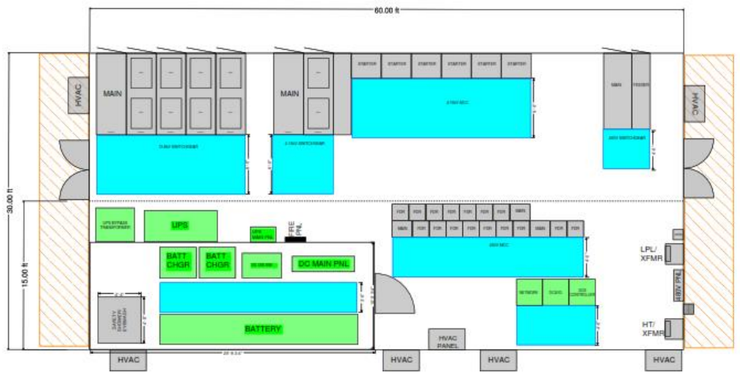

EGR ELECTRICAL ENCLOSURE

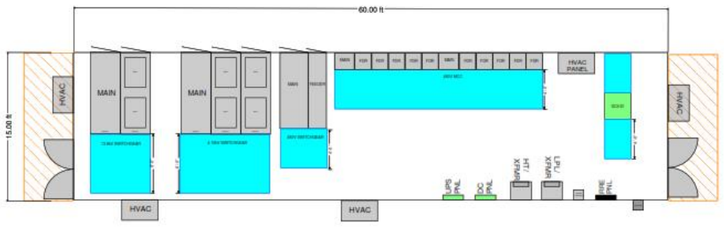

- PRELIMINARY -
NOT FOR CONSTRUCTION

REV	DESCRIPTION	DESIGN BY	CHECKED BY	DATE
0	ISSUED FOR FEED	N. MECHLER	M. WEBSTER	5/1/23

GE/SOUTHERN/LINDE
GE/SOUTHERN/LINDE ADVANCED NGCC INTEGRATION

Kiewit

ELECTRICAL ARRANGEMENT DRAWING
PLANT ELECTRICAL ENCLOSURE LAYOUTS

ENGINEER/DESIGN ORGANIZATION	
LEAD ENG	N. MECHLER
ENG MGR	B. LOFGREEN
PROJ MGR	B. LOFGREEN

DRAWING NUMBER: 20041223-EA-001

APPENDIX C

LOAD LIST

Kiewit

GE/SOUTHERN/LINDE ADVANCED NGCC INTEGRATION
ELECTRICAL LOAD LIST

Kiewit Engineering Group Inc.

REV	DATE	DESCRIPTION	ORIG	CHK	APPR
1	21-APR-2023	ISSUED FOR FEED	NJM	RMS	BRL
0	10-MAR-2023	ISSUED FOR FEED	NJM	HH	BRL
A	22-FEB-2023	ISSUED FOR REVIEW	NJM	HH	BRL

PROJECT	DOCUMENT NUMBER	REVISION
20041223	20041223-CA-ELE-001	1

KIEWIT ENGINEERING GROUP INC.

000000-EL-TMP-0001 v. 04

13.8KV SWITCHGEAR

GE/SOUTHERN/LINDE ADVANCED NGCC INTEGRATION

LOAD	TAG ID	HP	VOLTS	FL KW	FL KVA	FL AMPS	FL EFF.	FL P.F.	DEMAND	BREAKER SIZE	DEMAND HP	DEMAND KW	DEMAND KVA	DEMAND AMPS	COMMENTS	
50 KA	**6Z-MVA-SWG-1**															
LINDE LUMPED LOAD FEED A	(LATER)	44500	13200	36870.7	39016.6	1706.5	0.900	0.945	1.00	2000	44500.0	36870.7	39016.6	1640.9	LINDE PEAK LOAD	
LINDE LUMPED LOAD FEED B	(LATER)	44500	13200	36870.7	39016.6	1706.5	0.900	0.945	0.00	2000	0.0	0.0	0.0	0.0	LINDE PEAK LOAD	
CIRC WATER PUMP A	6Z-CWS-MPM-01A	5500	13200	4254.5	4654.8	203.6	0.964	0.914	1.00	1200	5500.0	4254.5	4654.8	195.8		
CIRC WATER PUMP B	6Z-CWS-MPM-01B	5500	13200	4254.5	4654.8	203.6	0.964	0.914	1.00	1200	5500.0	4254.5	4654.8	195.8		
CIRC WATER PUMP C	6Z-CWS-MPM-01C	5500	13200	4254.5	4654.8	203.6	0.964	0.914	0.00	1200	0.0	0.0	0.0	0.0		
4.16KV MCC/SWITCHGEAR 11	6Z-MVC-SWG-11		13800	2390.5	2924.5	122.4	1.000	0.817	1.00	1200		2390.5	2924.5	122.4		
13.8KV SWITCHGEAR 2	6Z-MVA-SWG-2		13800	4290.0	5113.2	213.9	1.000	0.848	1.00	1200		4336.0	5113.2	213.9		
480V SWITCHGEAR 12	6Z-LVB-SWG-12		13800	1831.8	2064.9	86.4	1.000	0.887	1.00	1200		1831.8	2064.9	86.4		
6Z-MVA-SWG-1 SUBTOTALS			13800									**53938**	**58882**	**2455**	**BUS PF**	**0.92**
		CONNECTED LOAD		95017.3	106282.1	4446.5										
50 KA	**6Z-MVA-SWG-2**															
4.16KV MCC/SWITCHGEAR 21	6Z-MVC-SWG-21		13800	2710.2	3196.0	133.7	1.000	0.848	1.00	1200		2710.2	3196.0	133.7		
480V SWITCHGEAR 22	6Z-LVB-SWG-22		13800	1579.7	1917.2	80.2	1.000	0.824	1.00	1200		1579.7	1917.2	80.2		
6Z-MVA-SWG-2 SUBTOTALS			13800									**4290**	**5113**	**214**	**BUS PF**	**0.84**
		CONNECTED LOAD		4290.0	5113.219	213.9										

4.16KV SWITCHGEAR

GE/SOUTHERN/LINDE ADVANCED NGCC INTEGRATION

LOAD	TAG ID	HP	VOLTS	FL KW	FL KVA	FL AMPS	FL EFF.	FL P.F.	DEMAND	BREAKER SIZE	DEMAND HP	DEMAND KW	DEMAND KVA	DEMAND AMPS	COMMENTS	
<50 KA	6Z-MVC-SWG-11 / 6Z-MVC-MCC-11															
COOLING TOWER FAN 1	6Z-CWS-MFN-01A	250	4000	199.0	242.3	35.0	0.937	0.821	1.00	400	250.0	199.0	242.3	33.6		
COOLING TOWER FAN 2	6Z-CWS-MFN-01B	250	4000	199.0	242.3	35.0	0.937	0.821	1.00	400	250.0	199.0	242.3	33.6		
COOLING TOWER FAN 3	6Z-CWS-MFN-01C	250	4000	199.0	242.3	35.0	0.937	0.821	1.00	400	250.0	199.0	242.3	33.6		
COOLING TOWER FAN 4	6Z-CWS-MFN-01D	250	4000	199.0	242.3	35.0	0.937	0.821	1.00	400	250.0	199.0	242.3	33.6		
COOLING TOWER FAN 5	6Z-CWS-MFN-01E	250	4000	199.0	242.3	35.0	0.937	0.821	1.00	400	250.0	199.0	242.3	33.6		
COOLING TOWER FAN 6	6Z-CWS-MFN-01F	250	4000	199.0	242.3	35.0	0.937	0.821	1.00	400	250.0	199.0	242.3	33.6		
COOLING TOWER FAN 7	6Z-CWS-MFN-01G	250	4000	199.0	242.3	35.0	0.937	0.821	1.00	400	250.0	199.0	242.3	33.6		
COOLING TOWER FAN 8	6Z-CWS-MFN-01H	250	4000	199.0	242.3	35.0	0.937	0.821	1.00	400	250.0	199.0	242.3	33.6		
COOLING TOWER FAN 9	6Z-CWS-MFN-01I	250	4000	199.0	242.3	35.0	0.937	0.821	1.00	400	250.0	199.0	242.3	33.6		
COOLING TOWER FAN 10	6Z-CWS-MFN-01J	250	4000	199.0	242.3	35.0	0.937	0.821	1.00	400	250.0	199.0	242.3	33.6		
AUX CIRC WATER PUMP	6Z-CWS-MPM-02	500	4000	400.9	501.1	72.3	0.930	0.800	1.00	400	500.0	400.9	501.1	69.6		
SPARE - PER CONTRACT			4160							1200						
6Z-MVC-SWG-11 / 6Z-MVC-MCC-11 SUBTOTALS			4160									**2391**	**2925**	**406**	**BUS PF**	**0.82**
			CONNECTED LOAD	2390.5	3041.503	422.1										
<50 KA	6Z-MVC-SWG-21															
DCC BLOWER #1 MOTOR		1750	4000	1355.1	1598.0	230.7	0.963	0.848	1.00	1200	1750.0	1355.1	1598.0	221.8		
DCC BLOWER #2 MOTOR		1750	4000	1355.1	1598.0	230.7	0.963	0.848	1.00	1200	1750.0	1355.1	1598.0	221.8		
SPARE - PER CONTRACT			4160							1200						
6Z-MVC-SWG-21 SUBTOTALS			4160									**2710**	**3196**	**444**	**BUS PF**	**0.85**
			CONNECTED LOAD	2710.2	3323.865	461.3										

000000-EL-TMP-0001 v. 04

LOW VOLTAGE SWITCHGEAR

GE/SOUTHERN/LINDE ADVANCED NGCC INTEGRATION

LOAD	TAG ID	HP	VOLTS	FL KW	FL KVA	FL AMPS	NEC 430.250 FLA	FL EFF.	FL P.F.	DEMAND	FRAME SIZE	BREAKER SIZE	DEMAND HP	DEMAND KW	DEMAND KVA	DEMAND AMPS	COMMENTS	
65 KA	6Z-LVB-SWG-12																	
480V MOTOR CONTROL CENTER 121	6Z-LVB-MCC-121		480	691.4	798.9	960.9		1.000	0.865	1.00	1600	1600		691.4	798.9	960.9		
480V MOTOR CONTROL CENTER 122	6Z-LVB-MCC-122		480	741.4	848.9	1021.0		1.000	0.873	1.00	1600	1600		741.4	848.9	1021.0		
480V MOTOR CONTROL CENTER 123	6Z-LVB-MCC-123		480	399.0	417.1	501.7		1.000	0.957	1.00	1600	1600		399.0	417.1	501.7		
SPARE - PER CONTRACT			480								800	800						
6Z-LVB-SWG-12 SUBTOTALS			480											1832	2065	2484	BUS PF	0.89
		CONNECTED LOAD		1831.8	2064.856	2483.6												
65 KA	6Z-LVB-SWG-22																	
480V MOTOR CONTROL CENTER 221	6Z-LVB-MCC-221		480	811.5	980.2	1179.0		1.000	0.828	1.00	1600	1600		811.5	980.2	1179.0		
480V MOTOR CONTROL CENTER 222	6Z-LVB-MCC-222		480	768.3	937.0	1127.0		1.000	0.820	1.00	1600	1600		768.3	937.0	1127.0		
SPARE - PER CONTRACT			480								800	800						
6Z-LVB-SWG-22 SUBTOTALS			480											1580	1917	2306	BUS PF	0.82
		CONNECTED LOAD		1579.7	1917.195	2306.0												

LOW VOLTAGE MOTOR CONTROL CENTERS

GE/SOUTHERN/LINDE ADVANCED NGCC INTEGRATION

LOAD	TAG ID	MOTOR SPACE HTR REQUIRED?	HP	VOLTS	FL KW	FL KVA	FL AMPS	NEC 430.250 FLA	FL EFF.	FL P.F.	TYPE	FRAME SIZE	BREAKER SIZE	SPACE	DEMAND	DEMAND KW	DEMAND KVA	DEMAND AMPS	COMMENTS
65 KA	6Z-LVB-MCC-121																		
BUS SIZE (AMPS) = 1600																			
UNIT 1 HRSG TIE-IN DAMPER SEAL AIR SKID	6A-FLG-SKD-01	YES	100	460	78.9	90.7	113.8	**124.0**	0.945	0.870	FVNR	4	-	4	1.00	78.9	90.7	113.8	
UNIT 1 CC TRAIN DAMPER SEAL AIR SKID	6A-FLG-SKD-02	YES	100	460	78.9	90.7	113.8	**124.0**	0.945	0.870	FVNR	4	-	4	1.00	78.9	90.7	113.8	
UNIT 1 CC TRAIN DAMPER	6A-DPR-FLG-190	NO	1	460	0.9	1.2	1.5	**2.1**	0.825	0.760	FVNR	1	-	2	1.00	0.9	1.2	1.5	
DEMINERALIZED WATER FORWARDING PUMP A	6Z-DWS-MPM-01A	NO	15	460	12.3	14.8	16.8	**21.0**	0.910	0.830	FVNR	2	-	2	1.00	12.3	14.8	16.8	
COOLING TOWER BLOWDOWN SODIUM BISULFITE FEED PUMP A	6Z-TCF-MPM-06A	NO	0.5	460	0.5	0.7	0.9	**1.1**	0.788	0.680	FVNR	1	-	2	1.00	0.5	0.7	0.9	
CORROSION INHIBITOR FEED PUMP A	6Z-TCF-MPM-02A	NO	0.5	460	0.5	0.7	0.9	**1.1**	0.788	0.680	FVNR	1	-	2	1.00	0.5	0.7	0.9	
SULFURIC ACID FEED PUMP A	6Z-TCF-MPM-03A	NO	0.5	460	0.5	0.7	0.9	**1.1**	0.788	0.680	FVNR	1	-	2	1.00	0.5	0.7	0.9	
SODIUM HYPOCHLORITE FEED PUMP A	6Z-TCF-MPM-04A	NO	0.5	460	0.5	0.7	0.9	**1.1**	0.788	0.680	FVNR	1	-	2	1.00	0.5	0.7	0.9	
COOLING TOWER CHEM FEED SUMP PUMP A	6Z-TCF-MPM-01A	NO	1	460	0.9	1.2	1.5	**2.1**	0.825	0.760	FVNR	1	-	2	1.00	0.9	1.2	1.5	
SCALE INHIBITOR FEED PUMP A	6Z-TCF-SKD-05A			460	0.5	0.6	0.7		0.900	0.850	Dual Bkr	125	20	1	1.00	0.5	0.6	0.7	
SERVICE WATER PUMP A	6Z-SWS-MPM-01A	YES	150	460	117.7	135.3	169.9	**180.0**	0.950	0.870	FVNR	5	-	5	1.00	117.7	135.3	169.9	
POTABLE WATER PUMP A	6Z-PWS-MPM-01			460	0.5	0.6	0.7		0.900	0.850	Dual Bkr	125	20	1	1.00	0.5	0.6	0.7	
AIR COMPRESSOR A	6Z-IA-CMP-01			480	122.0	143.5	172.6		0.900	0.850	BKR	250	225	3	1.00	122.0	143.5	172.6	
WASTE WATER SUMP PUMP	6Z-WW-MPM-01A			480	0.5	0.6	0.7		0.900	0.850	Dual Bkr	125	20	1	1.00	0.5	0.6	0.7	
OIL/WATER SEPARATOR PUMP A	6Z-PDR-MPM-01A	NO	5	460	4.3	5.2	6.5	**7.6**	0.875	0.820	FVNR	1	-	2	1.00	4.3	5.2	6.5	
EGR UNIT 1 INLET DAMPER SEAL AIR SKID	01-EGR-SKD-03	YES	50	460	40.1	46.1	57.8	**65.0**	0.930	0.870	FVNR	3	-	3	1.00	40.1	46.1	57.8	
UNIT 1 VENT STACK DAMPER SEAL AIR SKID	01-EGR-SKD-04	YES	50	460	40.1	46.1	57.8	**65.0**	0.930	0.870	FVNR	3	-	3	1.00	40.1	46.1	57.8	
UNIT 1 VENT STACK DAMPER	01-EGR-DPR-02	NO	1	460	0.9	1.2	1.5	**2.1**	0.825	0.760	FVNR	1	-	2	1.00	0.9	1.2	1.5	
UNIT 1 GT TIE-IN DAMPER SEAL AIR SKID	01-EGR-SKD-05	YES	50	460	40.1	46.1	57.8	**65.0**	0.930	0.870	FVNR	3	-	3	1.00	40.1	46.1	57.8	
UNIT 1 GT TIE-IN DAMPER	01-EGR-DPR-03	NO	1	460	0.9	1.2	1.5	**2.1**	0.825	0.760	FVNR	1	-	2	1.00	0.9	1.2	1.5	
BATTERY CHARGER 1	6Z-LVE-CHG-1			480	150.0	150.0	180.4		1.000	1.000	BKR	250	250	3	1.00	150.0	150.0	180.4	
SPARE - PER CONTRACT				460							FVNR	2		2					
SPARE SIZE 1 STARTER				460							FVNR	1		2					
SPARE 20A BKR				480							Dual Bkr	125	20	1					
SPARE 30A BKR				480							Dual Bkr	125	30	1					
FUTURE 12" SPACE				480										2					
6Z-LVB-MCC-121 SUBTOTALS								NUMBER OF SECTIONS (W/O MAIN BREAKER)						6		691	799	961	BUS PF 0.87
			CONNECTED LOAD		691.4	798.9	960.9									PERCENT LOADED= 60.1%			PERCENT CONSTANT KVA 60%

65 KA	6Z-LVB-MCC-122																		
BUS SIZE (AMPS) = 1600																			
UNIT 2 HRSG TIE-IN DAMPER SEAL AIR SKID	6B-FLG-SKD-01	YES	100	460	78.9	90.7	113.8	**124.0**	0.945	0.870	FVNR	4	-	4	1.00	78.9	90.7	113.8	
UNIT 2 CC TRAIN DAMPER SEAL AIR SKID	6B-FLG-SKD-02	YES	100	460	78.9	90.7	113.8	**124.0**	0.945	0.870	FVNR	4	-	4	1.00	78.9	90.7	113.8	
UNIT 2 CC TRAIN DAMPER	6A-DPR-FLG-290	NO	1	460	0.9	1.2	1.5	**2.1**	0.825	0.760	FVNR	1	-	2	1.00	0.9	1.2	1.5	
DEMINERALIZED WATER FORWARDING PUMP B	6Z-DWS-MPM-01B	NO	15	460	12.3	14.8	16.8	**21.0**	0.910	0.830	FVNR	2	-	2	1.00	12.3	14.8	16.8	
COOLING TOWER BLOWDOWN SODIUM BISULFITE FEED PUMP B	6Z-TCF-MPM-06B	NO	0.5	460	0.5	0.7	0.9	**1.1**	0.788	0.680	FVNR	1	-	2	1.00	0.5	0.7	0.9	
CORROSION INHIBITOR FEED PUMP B	6Z-TCF-MPM-02B	NO	0.5	460	0.5	0.7	0.9	**1.1**	0.788	0.680	FVNR	1	-	2	1.00	0.5	0.7	0.9	
SULFURIC ACID FEED PUMP B	6Z-TCF-MPM-03B	NO	0.5	460	0.5	0.7	0.9	**1.1**	0.788	0.680	FVNR	1	-	2	1.00	0.5	0.7	0.9	
SODIUM HYPOCHLORITE FEED PUMP B	6Z-TCF-MPM-04B	NO	0.5	460	0.5	0.7	0.9	**1.1**	0.788	0.680	FVNR	1	-	2	1.00	0.5	0.7	0.9	
COOLING TOWER CHEM FEED SUMP PUMP B	6Z-TCF-MPM-01B	NO	1	460	0.9	1.2	1.5	**2.1**	0.825	0.760	FVNR	1	-	2	1.00	0.9	1.2	1.5	
SCALE INHIBITOR FEED PUMP B	6Z-TCF-SKD-05B			460	0.5	0.6	0.7		0.900	0.850	Dual Bkr	125	20	1	1.00	0.5	0.6	0.7	
SERVICE WATER PUMP B	6Z-SWS-MPM-01B	YES	150	460	117.7	135.3	169.9	**180.0**	0.950	0.870	FVNR	5	-	5	1.00	117.7	135.3	169.9	
POTABLE WATER PUMP B	6Z-PWS-MPM-02			460	0.5	0.6	0.7		0.900	0.850	Dual Bkr	125	20	1	1.00	0.5	0.6	0.7	
AIR COMPRESSOR B	6Z-IA-CMP-02			480	122.0	143.5	172.6		0.900	0.850	BKR	250	225	3	1.00	122.0	143.5	172.6	
WASTE WATER SUMP PUMP	6Z-WW-MPM-01B			480	0.5	0.6	0.7		0.900	0.850	Dual Bkr	125	20	1	1.00	0.5	0.6	0.7	
OIL/WATER SEPARATOR PUMP B	6Z-PDR-MPM-01B	NO	5	460	4.3	5.2	6.5	**7.6**	0.875	0.820	FVNR	1	-	2	1.00	4.3	5.2	6.5	
EGR UNIT 2 INLET DAMPER SEAL AIR SKID	02-EGR-SKD-03	YES	50	460	40.1	46.1	57.8	**65.0**	0.930	0.870	FVNR	3	-	3	1.00	40.1	46.1	57.8	
UNIT 2 VENT STACK DAMPER SEAL AIR SKID	02-EGR-SKD-04	YES	50	460	40.1	46.1	57.8	**65.0**	0.930	0.870	FVNR	3	-	3	1.00	40.1	46.1	57.8	
UNIT 2 VENT STACK DAMPER	02-EGR-DPR-02	NO	1	460	0.9	1.2	1.5	**2.1**	0.825	0.760	FVNR	1	-	2	1.00	0.9	1.2	1.5	
UNIT 2 GT TIE-IN DAMPER SEAL AIR SKID	02-EGR-SKD-05	YES	50	460	40.1	46.1	57.8	**65.0**	0.930	0.870	FVNR	3	-	3	1.00	40.1	46.1	57.8	
UNIT 2 GT TIE-IN DAMPER	02-EGR-DPR-03	NO	1	460	0.9	1.2	1.5	**2.1**	0.825	0.760	FVNR	1	-	2	1.00	0.9	1.2	1.5	
BATTERY CHARGER 2	6Z-LVE-CHG-2			480	150.0	150.0	180.4		1.000	1.000	BKR	250	250	3	1.00	150.0	150.0	180.4	
UPS BYPASS	6Z-LVF-XFR-1			480	50.0	50.0	60.1		1.000	1.000	Dual Bkr	125	80	1	1.00	50.0	50.0	60.1	
SPARE - PER CONTRACT				460							FVNR	2		2					
SPARE SIZE 1 STARTER				460							FVNR	1		2					
SPARE 20A BKR				480							Dual Bkr	125	20	1					
SPARE 30A BKR				480							Dual Bkr	125	30	1					
FUTURE 12" SPACE				480										2					
6Z-LVB-MCC-122 SUBTOTALS								NUMBER OF SECTIONS (W/O MAIN BREAKER)						6		741	849	1021	BUS PF 0.87
			CONNECTED LOAD		741.4	848.9	1021.0									PERCENT LOADED= 63.8%			PERCENT CONSTANT KVA 57%

GE/SOUTHERN/LINDE ADVANCED NGCC INTEGRATION																				
LOAD	TAG ID	MOTOR SPACE HTR REQUIRED?	HP	VOLTS	FL KW	FL KVA	FL AMPS	NEC 430.250 FLA	FL EFF	FL P.F.	TYPE	FRAME SIZE	BREAKER SIZE	SPACE	DEMAND	DEMAND KW	DEMAND KVA	DEMAND AMPS	COMMENTS	
65 KA	6Z-LVB-MCC-123																			
BUS SIZE (AMPS) = 1600																				
HEAT TRACE PANEL 1	6Z-HTT-PPL-01			480	54.0	54.0	65.0		1.000	1.000	Dual Bkr	125	100	1	0.80	43.2	43.2	52.0	COLOCATED 480V:208/120V TRANSFORMER	
HEAT TRACE PANEL 2	6Z-HTT-PPL-02			480	54.0	54.0	65.0		1.000	1.000	Dual Bkr	125	100	1	0.80	43.2	43.2	52.0	COLOCATED 480V:208/120V TRANSFORMER	
BOP ENCLOSURE 480V PANEL	6Z-LVB-PPL-1231			480	74.8	83.1	100.0		1.000	0.900	Dual Bkr	125	125	1	0.80	59.9	66.5	80.0		
BOP ENCLOSURE 208V/120V PANEL	6Z-LVD-PPL-1232			480	48.6	54.0	65.0		1.000	0.900	Dual Bkr	125	100	1	0.80	38.9	43.2	52.0	COLOCATED 480V:208/120V TRANSFORMER	
SUBSTATION 480V PANEL	6Z-LVB-PPL-1234			480	74.8	83.1	100.0		1.000	0.900	Dual Bkr	125	125	1	0.80	59.9	66.5	80.0		
HEAT TRACE PANEL 3	6Z-HTT-PPL-03			480	54.0	54.0	65.0		1.000	1.000	Dual Bkr	125	100	1	0.80	43.2	43.2	52.0	COLOCATED 480V:208/120V TRANSFORMER	
HEAT TRACE PANEL 4	6Z-HTT-PPL-04			480	54.0	54.0	65.0		1.000	1.000	Dual Bkr	125	100	1	0.80	43.2	43.2	52.0	COLOCATED 480V:208/120V TRANSFORMER	
ADMIN BUILDING 480V PANEL	6Z-LVB-PPL-1233			480	83.1	83.1	100.0		1.000	1.000	Dual Bkr	125	125	1	0.80	66.5	66.5	80.0		
OIL/WATER SEPARATOR PUMP 2A	6Z-PDR-MPM-02A	NO	0.5	460	0.5	0.7	0.9	1.1	0.788	0.680	FVNR	1	-	2	1.00	0.5	0.7	0.9		
OIL/WATER SEPARATOR PUMP 2B	6Z-PDR-MPM-02B	NO	0.5	460	0.5	0.7	0.9	1.1	0.788	0.680	FVNR	1	-	2	1.00	0.5	0.7	0.9		
SPARE - PER CONTRACT				460							FVNR	2		2						
SPARE SIZE 1 STARTER				460							FVNR	1		2						
SPARE 20A BKR				480							Dual Bkr	125	20	1						
SPARE 30A BKR				480							Dual Bkr	125	30	1						
FUTURE 12" SPACE				480										2						
6Z-LVB-MCC-123 SUBTOTALS								NUMBER OF SECTIONS (W/O MAIN BREAKER)						3		399	417	582	BUS PF	0.96
			CONNECTED LOAD		267.0	275.8	331.7									PERCENT LOADED=		31.4%	PERCENT CONSTANT KVA	0%

65 KA	6Z-LVB-MCC-221																			
BUS SIZE (AMPS) = 1600																				
SEAL AIR PUMP#1 MOTOR	(LATER)	NO	20	460	16.4	20.2	25.4	27.0	0.910	0.810	FVNR	2	-	2	1.00	16.4	20.2	25.4		
SEAL AIR PUMP#2 MOTOR	(LATER)	NO	20	460	16.4	20.2	25.4	27.0	0.910	0.810	FVNR	2	-	2	1.00	16.4	20.2	25.4		
SEAL AIR PUMP#3 MOTOR	(LATER)	NO	20	460	16.4	20.2	25.4	27.0	0.910	0.810	FVNR	2	-	2	1.00	16.4	20.2	25.4		
SEAL AIR PUMP#4 MOTOR	(LATER)	NO	20	460	16.4	20.2	25.4	27.0	0.910	0.810	FVNR	2	-	2	1.00	16.4	20.2	25.4		
SEAL AIR PUMP#5 MOTOR	(LATER)	NO	20	460	16.4	20.2	25.4	27.0	0.910	0.810	FVNR	2	-	2	1.00	16.4	20.2	25.4		
SEAL AIR PUMP#6 MOTOR	(LATER)	NO	20	460	16.4	20.2	25.4	27.0	0.910	0.810	FVNR	2	-	2	1.00	16.4	20.2	25.4		
DCC RECIRC WATER PUMP#1 MOTOR	(LATER)	YES	200	460	157.0	180.4	226.5	240.0	0.950	0.870	FVNR	5	-	5	1.00	157.0	180.4	226.5		
DCC RECIRC WATER PUMP#2 MOTOR	(LATER)	YES	200	460	157.0	180.4	226.5	240.0	0.950	0.870	FVNR	5	-	5	1.00	157.0	180.4	226.5		
DCC RECIRC WATER PUMP#3 MOTOR	(LATER)	YES	200	460	157.0	180.4	226.5	240.0	0.950	0.870	FVNR	5	-	5	1.00	157.0	180.4	226.5		
CARBON CAPTURE ISOLATION DAMPER #1 MOTOR	(LATER)	YES	75	460	59.4	69.9	87.8	96.0	0.941	0.850	FVNR	4	-	4	1.00	59.4	69.9	87.8		
CARBON CAPTURE ISOLATION DAMPER #2 MOTOR	(LATER)	YES	75	460	59.4	69.9	87.8	96.0	0.941	0.850	FVNR	4	-	4	1.00	59.4	69.9	87.8		
HRSG STACK ISOLATION DAMPER #2 Motor	(LATER)	YES	75	460	59.4	69.9	87.8	96.0	0.941	0.850	FVNR	4	-	4	1.00	59.4	69.9	87.8		
BLOWER SUCTION MOTOR DAMPER	(LATER)	NO	20	460	16.4	20.2	25.4	27.0	0.910	0.810	FVNR	2	-	2	1.00	16.4	20.2	25.4		
MAKEUP WATER VALVE MOTOR	(LATER)	NO	5	460	4.3	5.2	6.5	7.6	0.875	0.820	FVNR	1	-	2	1.00	4.3	5.2	6.5		
EGR 240/120V PANEL #1	6Z-LVD-PPL-2211			480	54.0	54.0	65.0		1.000	1.000	Dual Bkr	125	100	1	0.80	43.2	43.2	52.0	COLOCATED 480V:240/120V TRANSFORMER	
SPARE - PER CONTRACT				460							FVNR	2		2						
SPARE SIZE 1 STARTER				460							FVNR	1		2						
SPARE 20A BKR				480							Dual Bkr	125	20	1						
SPARE 30A BKR				480							Dual Bkr	125	30	1						
FUTURE 12" SPACE				480										2						
6Z-LVB-MCC-221 SUBTOTALS								NUMBER OF SECTIONS (W/O MAIN BREAKER)						5		811	980	1179	BUS PF	0.83
			CONNECTED LOAD		756.7	906.6	1090.4									PERCENT LOADED=		73.7%	PERCENT CONSTANT KVA	83%

65 KA	6Z-LVB-MCC-222																			
BUS SIZE (AMPS) = 1600																				
SEAL AIR PUMP#1 MOTOR	(LATER)	NO	20	460	16.4	20.2	25.4	27.0	0.910	0.810	FVNR	2	-	2	1.00	16.4	20.2	25.4		
SEAL AIR PUMP#2 MOTOR	(LATER)	NO	20	460	16.4	20.2	25.4	27.0	0.910	0.810	FVNR	2	-	2	1.00	16.4	20.2	25.4		
SEAL AIR PUMP#3 MOTOR	(LATER)	NO	20	460	16.4	20.2	25.4	27.0	0.910	0.810	FVNR	2	-	2	1.00	16.4	20.2	25.4		
SEAL AIR PUMP#4 MOTOR	(LATER)	NO	20	460	16.4	20.2	25.4	27.0	0.910	0.810	FVNR	2	-	2	1.00	16.4	20.2	25.4		
SEAL AIR PUMP#5 MOTOR	(LATER)	NO	20	460	16.4	20.2	25.4	27.0	0.910	0.810	FVNR	2	-	2	1.00	16.4	20.2	25.4		
SEAL AIR PUMP#6 MOTOR	(LATER)	NO	20	460	16.4	20.2	25.4	27.0	0.910	0.810	FVNR	2	-	2	1.00	16.4	20.2	25.4		
DCC RECIRC WATER PUMP#1 MOTOR	(LATER)	YES	200	460	157.0	180.4	226.5	240.0	0.950	0.870	FVNR	5	-	5	1.00	157.0	180.4	226.5		
DCC RECIRC WATER PUMP#2 MOTOR	(LATER)	YES	200	460	157.0	180.4	226.5	240.0	0.950	0.870	FVNR	5	-	5	1.00	157.0	180.4	226.5		
DCC RECIRC WATER PUMP#3 MOTOR	(LATER)	YES	200	460	157.0	180.4	226.5	240.0	0.950	0.870	FVNR	5	-	5	1.00	157.0	180.4	226.5		
CARBON CAPTURE ISOLATION DAMPER #1 MOTOR	(LATER)	YES	75	460	59.4	69.9	87.8	96.0	0.941	0.850	FVNR	4	-	4	1.00	59.4	69.9	87.8		
CARBON CAPTURE ISOLATION DAMPER #2 MOTOR	(LATER)	YES	75	460	59.4	69.9	87.8	96.0	0.941	0.850	FVNR	4	-	4	1.00	59.4	69.9	87.8		
HRSG STACK ISOLATION DAMPER #2 Motor	(LATER)	YES	75	460	59.4	69.9	87.8	96.0	0.941	0.850	FVNR	4	-	4	1.00	59.4	69.9	87.8		
BLOWER SUCTION MOTOR DAMPER	(LATER)	NO	20	460	16.4	20.2	25.4	27.0	0.910	0.810	FVNR	2	-	2	1.00	16.4	20.2	25.4		
MAKEUP WATER VALVE MOTOR	(LATER)	NO	5	460	4.3	5.2	6.5	7.6	0.875	0.820	FVNR	1	-	2	1.00	4.3	5.2	6.5		
SPARE - PER CONTRACT				460							FVNR	2		2						
SPARE SIZE 1 STARTER				460							FVNR	1		2						
SPARE 20A BKR				480							Dual Bkr	125	20	1						
SPARE 30A BKR				480							Dual Bkr	125	30	1						
FUTURE 12" SPACE				480										2						
6Z-LVB-MCC-222 SUBTOTALS								NUMBER OF SECTIONS (W/O MAIN BREAKER)						5		768	937	1127	BUS PF	0.82
			CONNECTED LOAD		702.7	852.5	1025.4									PERCENT LOADED=		70.4%	PERCENT CONSTANT KVA	87%

APPENDIX D

FAT PROCEDURES

Kiewit

FACTORY ACCEPTANCE TEST PROCEDURE

POWER DISTRIBUTION CENTER (PDC)

DRAFT

Kiewit

CONTENTS

1. PURPOSE AND GENERAL INFORMATION 3
2. REFERENCE DOCUMENTS 4
3. DEFINITIONS 5
4. PRECAUTIONS AND PREREQUISITES 6
5. INSPECTIONS AND TESTS 7
5.1. VISUAL INSPECTIONS 7
5.2. MECHANICAL TESTS 14
5.3. ELECTRICAL TESTS 16
5.4. FUNCTIONAL TESTS 18
6. PUNCH LIST (ATTACHED) 33
7. ACKNOWLEDGMENT OF FACTORY ACCEPTANCE TEST COMPLETION: 34

DRAFT

Kiewit

1. PURPOSE AND GENERAL INFORMATION

This procedure covers Factory Acceptance Testing (FAT) and inspections of a single pre-fabricated Power Distribution Centers (PDC). The intent of the procedure is to ensure the building equipment and components have been duly tested and inspected to meet the design criteria as set forth in the approved specifications. This procedure is generic in nature and needs to be amended to match the project specific equipment and specification requirements.

The tests that need to be undertaken to successfully complete the FAT are broken up into four categories. These categories are listed below:

1. Verification Tests
2. Mechanical Tests
3. Electrical Tests
4. Functional Tests

If the requirements specified herein conflict with the Supplier / Original Equipment Manufacturer (OEM) requirement of testing and inspection, resolution will be determined on a case by case basis. If the conflict is between Supplier/OEM procedure and the applicable code and standards, the more restrictive of the two shall govern to the extent of such conflict.

Once the individual components have been successfully installed in the building, factory tests will be performed to verify that all equipment is properly installed, connected, and to ensure effective integration of all components prior to moving the building to site.

DRAFT

Kiewit

2. REFERENCE DOCUMENTS

2.1. Vendor Drawings

- 2.1.1. General Arrangement Drawings
- 2.1.2. Bill of Materials
- 2.1.3. Elevation Drawings
- 2.1.4. One-Line and Three-Line Diagrams
- 2.1.5. Schematics
- 2.1.6. Wiring and Interconnect Diagrams
- 2.1.7. Panel Schedules

2.2. KED Schematics

2.3. KED One-Line and Three-Line Diagrams

2.4. KED Panel Schedules

2.5. PDC Contract Specifications

2.6. Vendor supplied FAT Procedure / Agenda

DRAFT

Kiewit

3. DEFINITIONS

3.1. Continuity Test: These are tests performed to verify the cable installation in the building to ensure the wiring is connected as shown on the engineer approved drawings.

3.2. FAT: Factory Acceptance Tests.

3.3. Functional Tests: These are tests performed to verify proper operation of equipment as shown on the engineer approved drawings.

3.4. Mechanical Tests: These tests are to verify the physical integrity and operation of all equipment in the building.

3.5. Megger Test: These are tests performed to verify the integrity of the cable installation in the building and to ensure cable insulation. The purpose is to verify there is no damage to the cables wired to the equipment.

3.6. PDC: Power Distribution Center.

3.7. Verification Tests: These tests are to verify the assembled on-site equipment, components, bus, and accessories are correctly installed and labeled.

DRAFT

Kiewit

4. PRECAUTIONS AND PREREQUISITES

4.1. A conference call discussing the FAT procedure and agenda has been held with all Kiewit participants, Supplier / OEM, and owner at least one week prior to the commencement of the FAT.

4.2. Kiewit Lead Electrical Engineer, or their designee, will provide the latest and greatest red line drawings from any previous equipment FATs prior to the PDC FAT. Any information that deviates from the Kiewit approved vendor drawings to be examined and noted.

4.3. Kiewit Lead Electrical Engineer, or their designee, will ask the Supplier / OEM to provide the latest and greatest vendor drawings prior to the FAT and any information that deviates from the Kiewit approved vendor drawings to be examined and noted.

4.4. Kiewit Lead Electrical Engineer, or their designee, will ask the Supplier / OEM to provide the latest and greatest vendor circuit schedule prior to the FAT and any information that deviates from the Kiewit approved vendor circuit schedule to be examined and noted.

4.5. Kiewit Lead Electrical Engineer, or their designee, will ask the Supplier / OEM to provide the continuity, insulation resistance, and phasing test results for all cables in the vendor circuit schedule.

4.6. Kiewit Lead Electrical Engineer, or their designee, will ask the Supplier / OEM to provide the required temporary power for all items to be functionally tested as described in section 5.4.

4.7. This procedure needs to be followed and signed off by all Kiewit participants in addition to any Supplier / OEM procedure.

4.8. Use appropriate PPE and follow Kiewit as well as Supplier / OEM safe work practices during the course of FAT.

4.9. Functional test of the control scheme, logic and current / potential circuits shall be documented by highlighting the appropriate Kiewit and / or vendor schematics, three-line diagrams and logic diagrams.

4.10. Any corrections to the drawings shall be marked red for additions or green for deletions.

4.11. If particular tests or checks in this procedure are not applicable, mark the items as “NA” and a short explanation of why the items are not applicable in the Remarks section.

4.12. Any exceptions to this procedure shall be reviewed and approved by the Lead Electrical Engineer.

4.13. Attach a copy of all test results to this procedure at the conclusion of the FAT testing.

4.14. A closeout meeting shall be held at the conclusion of the testing and inspection to go over the punch list and open items. The punch list and open items shall be attached to the end of this procedure.

4.15. If a jumper is used to simulate relay output contact or any other contact closure, then it shall be fused.

4.16. If the building contains Switchgear or Medium Voltage Motor Control Centers that were assembled at the Supplier / OEM factory, then this procedure will be supplemented with the Switchgear and Medium Voltage MCC FAT procedure.

DRAFT

Kiewit

5. INSPECTIONS AND TESTS

5.1. VISUAL INSPECTIONS

The following checks include the visual inspection of the PDC exterior. Photograph the exterior of the PDC for documentation.

ITEM#	DESCRIPTION	ACCEPT	REJECT	REMARKS
5.1.1	Verify the general dimensions of the building match the dimensions shown on the approved drawings.			
5.1.2	Verify all wall and roof panels and frames appear straight and angles appear to match the layout and elevation design drawings.			
5.1.3	Verify that the PDC roof and guttering systems have been installed as shown on the approved drawings. Verify that all water intrusion flashing has been installed over equipment and access doors as shown on the approved drawings.			
5.1.4	Verify the exterior walls, roof, and base of the PDC are free of contamination, dents, or scratches. Verify the exterior painting of the building is complete as specified.			
5.1.5	Verify all building access doors are properly located. Verify the dimensions of all building access doors. Verify any windows are properly located on the doors and any signage on the door matches the approved drawings. (If signs are to be shipped loose and installed in the field, verify each sign is correct.)			
5.1.6	Verify all building exhaust hoods and vents are properly located, installed and sealed.			
5.1.7	Verify all conduit and piping penetrations for the building are properly located, sized and sealed. Verify conduits are installed with low point drains.			
5.1.8	Verify all miscellaneous penetrations are properly sized and located.			

DRAFT

Kiewit

5.1.9	Verify all exterior receptacles, switches, lights, photocells, and HVAC units are properly located and installed.			
5.1.10	Verify building external grounding provisions are provided as shown on the approved drawings. Verify there is no damage to the external area of the plate.			
5.1.11	Verify PDC base anchoring support points are properly located and lifting points are properly located.			
5.1.12	(If weatherproofing tests are not going to be performed at the FAT) Inspect the sealing of the building to ensure no seals are missing, or damaged.			

The following checks include the visual inspection of the interior of the PDC for appropriate equipment nameplates, safety labels, grounding connections, arrangement, and no undesirable material and/or tools have been inadvertently left inside the equipment.

ITEM#	DESCRIPTION	ACCEPT	REJECT	REMARKS
5.1.13	Verify the location of interior supports, columns and bracing against the building layout drawings.			
5.1.14	Verify the interior walls, ceiling, and floor of the PDC are free of contamination, dents, or scratches. Inspect the floor to verify it appears level and no bowing is present. Verify the interior painting of the building is complete as specified. If required, verify epoxy paint is properly applied.			
5.1.15	Verify the shipping split locations against the general arrangement drawings. Verify the gap in the floor, walls and ceiling are within tolerance. Verify that all wiring terminated in shipping split junction boxes is properly labeled.			

DRAFT

Kiewit

5.1.16	(If exterior grounding provisions are not designed) Verify building internal grounding provisions are installed as shown on the approved drawings. Verify there is no damage to the external area of the plate.			
5.1.17	Verify all equipment nameplates, tags, and any safety labels. Verify the equipment quantity / arrangement in the PDC is consistent with the general arrangement drawings. Verify each piece of equipment is not damaged. (Edit this list to match the design. Include all equipment to be verified. Individually check each piece of equipment listed.) A: Switchgear(s) B: Motor Control Center(s) C: Transformer(s), NGR(s) D: Battery Rack, Vents, Disconnects, Charger(s) E: UPS Equipment F: DCS Cabinet(s) G: Relay Panel(s) H: AC and DC Distribution Panel(s) I: Breaker Test Box(es) J: HVAC Unit(s) and Controller(s) K: Fire Alarm / Suppression Equipment L: Misc PDC Equipment / Safety Equipment M: Cable Trays N: Bus Ducts			
5.1.18	Verify the locations and installation of the lights and emergency lights within the PDC match the general arrangement drawings.			
5.1.19	Verify the location and dimensions of any vault access doors against the general arrangement drawings. Verify the orientation of the doors match the drawings.			

DRAFT

Kiewit

5.1.20	Verify the location, quantity, and dimensions of any cutouts in the floor for future equipment to be installed in the field.			
5.1.21	Verify the following including layout, arrangement and support of all conduit systems. A: Verify the conduits are supported with proper quantity of clamps and spacing. Verify supports are secured appropriately. B: Verify conduits are not loose, damaged or bent. C: Verify the conduit systems are the correct material. D: If required, verify the labeling or tagging of conduits. E: If required, verify seal off fittings have been provided on required conduits. F: Verify all conduit covers are provided. G: Verify conduits are not overfilled, or conduits that are installed for future wire pulls are not significantly filled. H: Verify the installation of flexible conduits where required and bonding.			
5.1.22	Verify the following including the layout, arrangement and support of all cable tray systems. A: Verify the cable trays are supported with proper spacing between supports. Verify the supports are secured appropriately. B: Verify the supports are properly aligned, and all cable tray accessories are present. C: Verify cable trays are damaged or bent. D: Verify the PDC tray systems for the correct material. E: If required, verify the labeling or tagging of all cable trays.			

DRAFT

Kiewit

	F: Inspect the ground bus along the cable tray is complete. Verify the installation matches design intent. G: Verify cable trays are not overfilled. Verify trays that are installed for future wire pulls have sufficient space.			
5.1.23	Verify the following including the layout, arrangement and support of all wire way systems. A: Verify wire ways are not loose, damaged or bent. B: Verify the PDC wire ways for the correct material. C: If required, verify any labeling or tagging of wire ways. D: Ground connections along wire ways are complete and correct. E: Verify wire ways are not overfilled. Verify wire ways that are installed for future pulls have sufficient space. F: Verify all wire way covers are provided.			
5.1.24	Verify the following including the layout, arrangement and support of all bus duct systems. A: Verify the bus ducts are supported with proper spacing between supports. Verify the supports are secured appropriately. B: Verify the supports are properly aligned, and all bus duct accessories are present. C: Verify bus ducts are not loose, damaged or bent. D: If required, verify the labeling or tagging of bus ducts. F: Ground connection for bus duct enclosure is complete and correct. G: Verify all bus duct covers are installed. H: Verify the phasing between pieces of equipment connected is correct.			

DRAFT

Kiewit

5.1.25	Verify the chargers and UPS are installed with vendor recommended free space on all sides.			
5.1.26	Verify the following including the layout, arrangement and support of the PDC battery rack. A: Verify all accessories and supports are in place and installed per the approved drawings. B: Verify the dimensions of the battery rack installation.			
5.1.27	Verify the battery containment installation is complete and sealed. Verify the battery room walls and floor is painted with acid resistance paint where required and as shown on the approved drawings.			
5.1.28	Verify the DC battery disconnect switch fuses are the correct rating.			
5.1.29	Verify that all equipment enclosures and raceway are adequately grounded and all power and safety grounds are connected to the PDC ground bus system. (Edit this list to match the design. Include all equipment to be verified. Individually check each piece of equipment listed.) A: Switchgear(s) B: Motor Control Center(s) C: Transformer(s), NGR(s) D: Battery Rack, Vents, Disconnects, Charger(s) E: UPS Equipment F: DCS Cabinet(s) G: Relay Panel(s) H: AC and DC Distribution Panel(s) I: Breaker Test Box(es) J: HVAC Unit(s) and Controller(s) K: Fire Alarm / Suppression L: Misc PDC Equipment M: Cable Tray(s)			

DRAFT

Kiewit

	N: Conduit Fitting(s)			
5.1.30	Verify the bend radius has not been exceeded on any installed 4/0 AWG or larger ground cables. Verify all ground bus standoff insulators are not damaged.			
5.1.31	Verify that all interior equipment is anchored correctly. If required, verify any equipment that requires dampening due to vibration has the appropriate accessories installed.			
5.1.32	Verify the AC Distribution Panel(s). (Copy / Paste one complete set of checks for each AC panel in the PDC.) A: Posted panel schedule agrees with the drawings. B: Panel circuit assignments agree with the drawings and posted panel schedule. C: Circuit breaker ratings agree with the drawings. D: Wire labels are provided and agree with panel schedule. E: Spare breakers and space for spare breakers are provided. F: Verify cable entries in the panels are properly sealed. G: Verify cables are not resting on or pressed against any sharp edges.			
5.1.33	Verify the DC Distribution Panel(s). (Copy / Paste one complete set of checks for each DC panel in the enclosure.) A: Posted panel schedule agrees with the drawings. B: Panel circuit assignments agree with the drawings and cable schedule. C: Circuit breaker ratings agree with the drawings. D: Wire labels are provided and agree with panel schedule.			

DRAFT

Kiewit

	E: Spare breakers and space for spare breakers are provided. F: Verify cable entries in the panels are properly sealed. G: Verify cables are not resting on or pressed against any sharp edges.			
5.1.34	Verify the listed equipment has sufficient space for any required field terminations. Verify any current cables installed in the PDC will not interfere with any required field terminations. A: Switchgear(s) B: Motor Control Center(s) C: Transformer(s) D: Charger(s) E: UPS Equipment F: DCS Cabinet(s) G: Relay Panel(s) H: AC and DC Distribution Panel(s) I: Misc PDC Equipment / Safety Equipment			
5.1.35	Verify Transformers and MCC's have the required free space on all sides recommended by the manufacturer.			

5.2. MECHANICAL TESTS

These tests include the checking of the physical integrity of the equipment in the PDC and the overall building for good quality. This will include the checking of equipment access doors for proper closing and opening, building entrance doors, and rack in rack out of the power circuit breakers for proper operation. These checks include checking the torque / torque marks on all substation assemblies such as bus ducts, ground bars, raceway bracing, etc.

ITEM#	DESCRIPTION	ACCEPT	REJECT	REMARKS
5.2.1	Open and close the building entrance exterior access doors. A: Door alignment mechanisms operate smoothly.			

DRAFT

Kiewit

	B: Door stops are installed correctly and allow propping the door open. C: Door gaskets and seals are properly installed. D: Door closes properly without any gaps. E: There are no obstructions in front of the door. F: Verify panic bars operate smoothly. G: Verify the swing radius.			
5.2.2	Open and close the PDC equipment exterior access doors. A: Door alignment mechanisms operate smoothly. B: Door stops are installed correctly and allow propping the door open. C: Door gaskets and seals are properly installed. D: Door closes properly without any gaps. E: There are no obstructions in front of the door. F: Verify the swing radius.			
5.2.3	Open and close the PDC vault access doors. A: Door alignment mechanisms operate smoothly. Door opens in the correct direction. B: Door props are installed correctly and allow holding the door open. C: Door closes properly without any gaps. D: There are no obstructions in front of the door and access in and out of the vault is unobstructed. E: Verify the swing radius.			
5.2.4	Open and close all interior equipment enclosure access doors both front and rear. A: Door alignment mechanisms operate smoothly. B: Door stops are installed correctly and allow propping the door open. C: Door gaskets and seals are properly installed. D: Door closes properly without any gaps. E: There are no obstructions in front of the door. F: Verify the swing radius.			

DRAFT

Kiewit

5.2.5	Rack in and rack out MV Switchgear Main and Tie circuit breakers as well as at a minimum two randomly selected feeder breakers. Breakers should include top and bottoms sections, middle and opposite ends of each lineup. Racking operations should be performed with the equipment doors closed. A: Breakers are able to be racked out of their cubicles without obstruction. B: Breaker visual indication properly indicates the change from connected to disconnected positions. C: Breakers can be pulled out of their cubicles from the disconnected position without obstruction. B: Breakers are able to be racked back into their cubicles without obstruction.			
5.2.6	Check any key interlocks provided with equipment for proper locking and unlocking operations. Verify only one key works with individual locks.			
5.2.7	Weatherproofing tests on enclosure. Rain tests are to be performed on the enclosure per the contract specifications. Procedures that will be used for this test as well as the results are appended to this report. Verify the following after the rain test has been performed. A: No water on primary or secondary insulation. B: No water on any electrical components or mechanisms of the assembly. C: No significant accumulation of water retained by the structure or other non-insulating parts.			

DRAFT

5.3. ELECTRICAL TESTS

These tests involve the verification of cable continuity, polarity, and verification of the interconnection wiring between the equipment inside the building. For the tests to be successful the interconnection wiring is to match the latest vendor circuit schedule prepared prior to the FAT. The

Kiewit

cables are to be traced from the origin to the termination point. The cable ID in the circuit schedule will be marked if the wire size/type agrees and the point to point terminations agree with what is installed. Any deviation from the latest vendor circuit schedule will be noted and need to be approved.

ITEM#	DESCRIPTION	ACCEPT	REJECT	REMARKS
5.3.1	Circuit continuity and insulation resistance tests. Verify the results for the continuity, insulation resistance, and polarity test results for all cables in the vendor circuit schedule provided by factory quality documentation. Procedures that will be used for these tests as well as the results are appended to this report. NOTE: any cables that are on the PDC circuit schedule that are missing test results will be verified / witnessed during the FAT.			
5.3.2	Check power cables that are interconnecting between pieces of equipment within the enclosure. Record any exceptions to the latest vendor circuit schedule that are acceptable. Results for this check are appended to this report. A: Wire tags are provided per the specifications and agree with the design drawings and vendor circuit schedule. B: Cable type and size agree with specifications. C: Cable terminations and phasing match design drawings and vendor circuit schedule. D: Cables are properly routed and supported. Cable bend radius has not been exceeded. E: Installation does not interfere with future pulls in the field.			
5.3.3	Check the continuity of control and indication cables that are interconnecting between pieces of equipment within the enclosure. Record any exceptions to the latest vendor circuit schedule			

DRAFT

Kiewit

	that are acceptable. Results for this check are appended to this report. A: Wire tags are provided per the specifications and agree with the design drawings and vendor circuit schedule. B: Cable type and size agree with specifications. C: Cable terminations match design drawings and vendor circuit schedule. D: Cables are properly routed and supported.			
5.3.4	Verify any splices done in the factory have been torqued and torque marked to indicate.			
5.3.5	Verify all connections for equipment with in a shipping split are torqued and torque marked to indicate.			

5.4. FUNCTIONAL TESTS

Perform functional and operational tests to verify that all equipment level inputs and outputs function in accordance with the approved schematics and elementary diagrams. For these tests, the control functions are to be checked by actuating each contact that initiates a control operation, and then following the sequence through various devices to verify that the correct results are obtained for each condition. The actuating of contacts, as required to initiate an operation, are performed by simulation. Tests shall be simulated by manipulation, contact blocking, contact jumping, or digital signal generation. In order to complete the following tests, control voltage will need to be supplied to the electrical equipment, as well as temporary power for lighting and HVAC units.

SCOPE OF FUNCTIONAL TESTS (Copy and Paste the appropriate tests required)

Instructions: Functional tests internal to the individual pieces of electrical equipment may have been completed at the original equipment manufacturer's FAT. In these cases, the Functional Tests listed in that equipment's separate FAT procedure will not be repeated during the PDC FAT. It is assumed they were completed and documented previously. Only the verification of inputs and outputs between devices that were installed by the PDC manufacturer will be required. In the event that punch list items exist from previously tested equipment, or major revisions to the equipment design occurred after the equipment was originally tested, then those functional tests will be verified at the PDC FAT. However, the specific tests will still be documented in a separate equipment procedure that can be attached to this document.

Kiewit

If equipment is assembled in the PDC and was not tested previously, then the FAT procedure for the individual pieces of equipment will need to be completed in addition to this procedure at the PDC FAT. This procedure will not cover the internal functional tests required for that specific equipment. For this procedure, the extent of the scope of functional testing will primarily depend on the installation and wiring of the DCS and or relay panels. Therefore, the functional testing section will be split into three major areas listed below, the sections that do not apply can be either crossed out or marked NA:

1. DCS Cabinets and/ or Relay Panels are installed and wired at the PDC manufacturer.
2. PDC is equipped with SMART communication devices and the end user can be simulated at the PDC factory.
3. DCS cabinets or relay panels have not been installed or wired at the PDC manufacturer.

1. DCS Cabinets and / or Relay Panels installed and wired in PDC

Switchgear Functional Tests (Copy and paste for each SWGR to be tested)

ITEM#	DESCRIPTION	ACCEPT	REJECT	REMARKS
5.4.1	Verify the breakers TOC contacts, by jumping and checking continuity, indicate the correct breaker positions going to the correct DCS addresses.			
5.4.2	Verify breakers close and trip commands from the correct DCS addresses.			
5.4.3	Verify breakers close and trip indications to the DCS are going to the correct addresses.			
5.4.4	Verify breakers close and trip commands coming from any installed remote control panels in the PDC.			
5.4.5	Verify breakers close and trip indications going to any installed remote control panels in the PDC.			
5.4.6	Verify all breaker trips and block closing operations from the protective relays in installed remote relay panels.			
5.4.7	Verify all breakers trip and block closing operation from the lockout relays in any installed remote panels.			

DRAFT

Kiewit

5.4.8	Verify the breaker trip coil monitoring alarms going to the correct DCS address.			
5.4.9	Verify the lockout tripped and trip coil monitoring alarms are going to the correct DCS address.			
5.4.10	If Switchgear is equipped with a remote transfer control panel then functionally verify all transfer options.			
5.4.11	Verify all trouble alarms from the Switchgear to the DCS are going to the correct DCS input card.			
5.4.12	Verify all maintenance switch indications going to other devices or panels are wired correctly.			
5.4.13	Verify any trips or indications going between multiple Switchgears within the PDC that were wired by the PDC Manufacturer.			

MCC Functional Tests (Copy and paste for each MCC to be tested)

ITEM#	DESCRIPTION	ACCEPT	REJECT	REMARKS
5.4.14	Verify the contactors TOC contacts indicate the correct contactor positions going to the correct DCS addresses.			
5.4.15	Verify contactors close and trip commands from the correct DCS addresses.			
5.4.16	Verify contactors close and trip indications to the DCS are going to the correct addresses.			
5.4.17	Verify the contactor trip coil monitoring alarms going to the correct DCS address.			
5.4.18	Verify local lockout tripped and trip coil monitoring alarms are going to the correct DCS address.			
5.4.19	Verify all trouble alarms from the MCC to the DCS are going to the correct DCS input card.			
5.4.20	Verify all maintenance switch indications going to other devices or panels are wired correctly.			

DRAFT

Kiewit

5.4.21	Verify any Trips or indications going between MCCs and Switchgears within the PDC that were wired by the PDC Manufacturer.			

PDC Transformer and Neutral Grounding Resistor Functional Tests (Copy and paste for each XFMR / NGR to be tested)

ITEM#	DESCRIPTION	ACCEPT	REJECT	REMARKS
5.4.22	Verify any trips going from the transformer temperature monitor to any breakers.			
5.4.23	Verify the alarms coming from the transformer temperature monitor are going to the correct address in the DCS.			
5.4.24	Verify any alarms or indications coming from the transformer NGR to the DCS are wired correctly.			

Battery Ventilation System and Battery Charger Functional Tests (Copy and paste the checks for each Battery Charger to be tested)

ITEM#	DESCRIPTION	ACCEPT	REJECT	REMARKS
5.4.25	Functionally verify any local control panels that are being used for the battery room ventilation.			
5.4.26	Verify the wiring of any alarms or indications going from the hydrogen monitor and or vent fans to the correct DCS point.			
5.4.27	Verify the wiring of any alarms or indications coming from the battery chargers are going to the correct address in the DCS.			

UPS Power System Functional Tests (Copy and paste for each UPS to be tested)

ITEM#	DESCRIPTION	ACCEPT	REJECT	REMARKS

Kiewit

5.4.30	Verify the wiring of any alarms or indications going from the UPS System to the correct DCS point.			

Relay Panel Functional Tests (Copy and paste for each Relay Panel to be tested)

ITEM#	DESCRIPTION	ACCEPT	REJECT	REMARKS
5.4.31	Verify the wiring of any alarms or indications going from the Relay Panel(s) to the correct DCS point.			

AC and DC Power Panel Functional Tests (Copy and paste for Power Panels that apply)

ITEM#	DESCRIPTION	ACCEPT	REJECT	REMARKS
5.4.32	Verify the wiring of any alarms or indications going from the Power Panel(s) to the correct DCS point.			

HVAC Units and Controllers Functional Tests (Copy and paste for all HVAC Units and controllers to be tested)

ITEM#	DESCRIPTION	ACCEPT	REJECT	REMARKS
5.4.33	Functionally verify any local control panels that are being used for the HVAC in the PDC.			
5.4.34	Verify the wiring of any alarms or indications going from the HVAC Units to the correct DCS point.			
5.4.35	Verify the wiring of any alarms or indications coming from the HVAC Controller is going to the correct address in the DCS.			
5.4.36	Verify the operation of the HVAC from the controller by either manipulating the controller set points or temperature sensor.			

Fire Alarm / Suppression Functional Tests (Copy and paste for Fire Alarm Panels that apply)

Kiewit

ITEM#	DESCRIPTION	ACCEPT	REJECT	REMARKS
5.4.37	Verify the wiring of any alarms or indications coming from the Fire Alarm is going to the correct address in the DCS.			
5.4.38	Verify, if any, the wiring of alarms or trips between the Fire Alarm panel and HVAC controller.			

Lighting Contactors, Switches, and circuits (Copy and paste for equipment that apply)

ITEM#	DESCRIPTION	ACCEPT	REJECT	REMARKS
5.4.39	Verify the wiring of internal wall switches.			
5.4.40	Verify HOA switch functions correctly with external lighting.			
5.4.41	Verify operation of Emergency lighting.			

Breaker Test Cabinets (Copy and paste for equipment that apply)

ITEM#	DESCRIPTION	ACCEPT	REJECT	REMARKS
5.4.42	Verify there is sufficient access from the breaker cubicle to the test cabinet.			
5.4.43	Verify the operation of the breaker test cabinet close and open test switch with at least one breaker.			

Misc. PDC Equipment Functional Tests (Copy and paste for any equipment not mentioned above with interconnecting wiring in the PDC that apply)

ITEM#	DESCRIPTION	ACCEPT	REJECT	REMARKS
5.4.44	Verify the wiring of any alarms or indications coming from Equipment going to the correct address in the DCS.			

Kiewit

5.4.45	Verify the wiring of alarms or trips between equipment in the PDC.			

2. PDC is equipped with SMART communication devices and the end user can be simulated at the PDC factory.

Perform functional and operational tests to verify that all equipment level inputs and outputs function in accordance with the approved schematics and elementary diagrams. For these tests, the control functions are to be checked by actuating each contact that initiates a control operation, and then following the sequence through various devices to verify that the correct results are obtained for each condition. The actuating of contacts, as required to initiate an operation, are performed by simulation. Tests shall be simulated by manipulation, contact blocking, contact jumping, or digital signal generation. In order to complete the following tests, control voltage will need to be supplied to the electrical equipment, as well as temporary power for lighting and HVAC units.

For all equipment equipped with SMART communication devices the end user will verify the correct bits or words are being manipulated for the correct operation. If the DCS cabinets are not installed, or the communication cannot be verified within the DCS cabinets, then the end user will connect as far from the device under test as possible to verify as much communication wiring as possible. The functional tests for all DCS indications and commands can only be marked acceptable if the equipment properly communicates the intended information to the end user and the end user can properly control the equipment under test. In addition to digital functions, analog signals can also be simulated in order to verify voltage, current, and power signals are correctly communicated to the end user.

Switchgear Functional Tests (Copy and paste for each SWGR to be tested)

ITEM#	DESCRIPTION	ACCEPT	REJECT	REMARKS
5.4.46	Verify the breakers TOC contacts, by jumping and checking continuity, indicate the correct breaker positions going to the correct DCS addresses.			
5.4.47	Verify breakers close and trip commands from the correct DCS addresses.			
5.4.48	Verify breakers close and trip indications to the DCS are going to the correct addresses.			
5.4.49	Verify breakers close and trip commands coming from any installed remote control panels in the PDC.			

Kiewit

5.4.50	Verify breakers close and trip indications going to any installed remote control panels in the PDC.			
5.4.51	Verify all breaker trips and block closing operations from the protective relays in installed remote relay panels.			
5.4.52	Verify all breakers trip and block closing operation from the lockout relays in any installed remote panels.			
5.4.53	Verify the breaker trip coil monitoring alarms going to the correct DCS address.			
5.4.54	Verify the lockout tripped and trip coil monitoring alarms are going to the correct DCS address.			
5.4.55	If Switchgear is equipped with a remote transfer control panel then functionally verify all transfer options.			
5.4.56	Verify all trouble alarms from the Switchgear to the DCS are going to the correct DCS address.			
5.4.57	Verify all maintenance switch indications going to other devices or panels are wired correctly.			
5.4.58	Verify any trips or indications going between multiple Switchgears within the PDC that were wired by the PDC Manufacturer.			
5.4.59	Verify analog voltage values are displayed at the correct DCS address by LV injection. Verify DCS scaled values are correct.			
5.4.60	Verify analog current values are correctly displayed at the correct DCS address by secondary current injection. Verify DCS scaled values are correct.			
5.4.61	Verify analog power values are correctly displayed at the correct DCS address by secondary current and voltage injection. Verify DCS scaled values are correct. Verify positive and negative values are correctly displayed.			

DRAFT

Kiewit

MCC Functional Tests (Copy and paste for each MCC to be tested)

ITEM#	DESCRIPTION	ACCEPT	REJECT	REMARKS
5.4.62	Verify the contactors TOC contacts indicate the correct contactor positions going to the correct DCS addresses.			
5.4.63	Verify contactors close and trip commands from the correct DCS addresses.			
5.4.64	Verify contactors close and trip indications to the DCS are going to the correct addresses.			
5.4.65	Verify the contactor trip coil monitoring alarms going to the correct DCS address.			
5.4.66	Verify local lockout tripped and trip coil monitoring alarms are going to the correct DCS address.			
5.4.67	Verify all trouble alarms from the MCC to the DCS are going to the correct DCS input card.			
5.4.68	Verify all maintenance switch indications going to other devices or panels are wired correctly.			
5.4.69	Verify any Trips or indications going between MCCs and Switchgears within the PDC that were wired by the PDC Manufacturer.			

PDC Transformer and Neutral Grounding Resistor Functional Tests (Copy and paste for each XFMR / NGR to be tested)

ITEM#	DESCRIPTION	ACCEPT	REJECT	REMARKS
5.4.70	Verify any trips going from the transformer temperature monitor to any breakers.			
5.4.71	Verify the alarms coming from the transformer temperature monitor are going to the correct address in the DCS.			
5.4.72	Verify any alarms or indications coming from the transformer NGR to the DCS are wired correctly.			

DRAFT

Kiewit

Battery Ventilation System and Battery Charger Functional Tests (Copy and paste the checks for each Battery Charger to be tested)

ITEM#	DESCRIPTION	ACCEPT	REJECT	REMARKS
5.4.29	Functionally verify any local control panels that are being used for the battery room ventilation.			
5.4.30	Verify the wiring of any alarms or indications going from the hydrogen monitor to the correct DCS point.			
5.4.31	Verify the wiring of any alarms or indications coming from the battery chargers are going to the correct address in the DCS.			

UPS Power System Functional Tests (Copy and paste for each UPS to be tested)

ITEM#	DESCRIPTION	ACCEPT	REJECT	REMARKS
5.4.32	Verify the wiring of any alarms or indications going from the UPS System to the correct DCS point.			

Relay Panel Functional Tests (Copy and paste for each Relay Panel to be tested)

ITEM#	DESCRIPTION	ACCEPT	REJECT	REMARKS
5.4.33	Verify the wiring of any alarms or indications going from the Relay Panel(s) to the correct DCS point.			

AC and DC Power Panel Functional Tests (Copy and paste for Power Panels that apply)

ITEM#	DESCRIPTION	ACCEPT	REJECT	REMARKS
5.4.34	Verify the wiring of any alarms or indications going from the Power Panel(s) to the correct DCS point.			

HVAC Units and Controllers Functional Tests (Copy and paste for all HVAC Units and controllers to be tested)

Kiewit

ITEM#	DESCRIPTION	ACCEPT	REJECT	REMARKS
5.4.35	Functionally verify any local control panels that are being used for the HVAC in the PDC.			
5.4.36	Verify the wiring of any alarms or indications going from the HVAC Units to the correct DCS point.			
5.4.37	Verify the wiring of any alarms or indications coming from the HVAC Controller is going to the correct address in the DCS.			
5.4.38	Verify the operation of the HVAC from the controller by either manipulating the controller set points or temperature sensor.			

Fire Alarm / Suppression Functional Tests (Copy and paste for Fire Alarm Panels that apply)

ITEM#	DESCRIPTION	ACCEPT	REJECT	REMARKS
5.4.39	Verify the wiring of any alarms or indications coming from the Fire Alarm is going to the correct address in the DCS.			
5.4.40	Verify, if any, the wiring of alarms or trips between the Fire Alarm panel and HVAC controller.			

Lighting Contactors, Switches, and circuits (Copy and paste for equipment that apply)

ITEM#	DESCRIPTION	ACCEPT	REJECT	REMARKS
5.4.41	Verify the wiring of internal wall switches.			
5.4.42	Verify HOA switch functions correctly with external lighting.			
5.4.43	Verify operation of Emergency lighting.			

Breaker Test Cabinets (Copy and paste for equipment that apply)

DRAFT

Kiewit

ITEM#	DESCRIPTION	ACCEPT	REJECT	REMARKS
5.4.44	Verify there is sufficient access from the breaker cubicle to the test cabinet.			
5.4.45	Verify the operation of the breaker test cabinet close and open test switch with at least one breaker.			

Misc. PDC Equipment Functional Tests (Copy and paste for any equipment not mentioned above with interconnecting wiring in the PDC that apply)

ITEM#	DESCRIPTION	ACCEPT	REJECT	REMARKS
5.4.46	Verify the wiring of any alarms or indications coming from Equip going to the correct address in the DCS.			
5.4.47	Verify the wiring of alarms or trips between equipment in the PDC.			

3. DCS Cabinets and Relay Panels have not been installed or wired at the PDC manufacturer.

Perform functional and operational tests to verify that all equipment level inputs and outputs function in accordance with the approved schematics and elementary diagrams. For these tests, the control functions are to be checked by actuating each contact that initiates a control operation, and then following the sequence through various devices to verify that the correct results are obtained for each condition. The actuating of contacts, as required to initiate an operation, are performed by simulation. Tests shall be simulated by manipulation, contact blocking, contact jumping, or digital signal generation. In order to complete the following tests, control voltage will need to be supplied to the electrical equipment, as well as temporary power for lighting and HVAC units.

Switchgear Functional Tests (Copy and paste for each SWGR to be tested)

ITEM#	DESCRIPTION	ACCEPT	REJECT	REMARKS
5.4.48	Verify breakers close and trip commands coming from any installed remote control panels in the PDC.			

Kiewit

5.4.49	Verify breakers close and trip indications going to any installed remote control panels in the PDC.			
5.4.50	If Switchgear is equipped with a remote transfer control panel then functionally verify all transfer options.			
5.4.51	Verify all maintenance switch indications going to other devices or panels are wired correctly.			
5.4.52	Verify any trips or indications going between multiple Switchgears within the PDC that were wired by the PDC Manufacturer.			

MCC Functional Tests (Copy and paste for each MCC to be tested)

ITEM#	DESCRIPTION	ACCEPT	REJECT	REMARKS
5.4.53	Verify all maintenance switch indications going to other devices or panels are wired correctly.			
5.4.54	Verify any Trips or indications going between MCCs and Switchgears within the PDC that were wired by the PDC Manufacturer.			

PDC Transformer and Neutral Grounding Resistor Functional Tests (Copy and paste for each XFMR / NGR to be tested)

ITEM#	DESCRIPTION	ACCEPT	REJECT	REMARKS
5.4.55	Verify any trips going from the transformer temperature monitor to any breakers.			

Battery Ventilation System and Battery Charger Functional Tests (Copy and paste the checks for each Battery Charger to be tested)

ITEM#	DESCRIPTION	ACCEPT	REJECT	REMARKS
5.4.56	Functionally verify any local control panels that are being used for the battery room ventilation.			

Kiewit

HVAC Units and Controllers Functional Tests (Copy and paste for all HVAC Units and controllers to be tested)

ITEM#	DESCRIPTION	ACCEPT	REJECT	REMARKS
5.4.57	Functionally verify any local control panels that are being used for the HVAC in the PDC.			
5.4.58	Verify the operation of the HVAC from the controller by either manipulating the controller set points or temperature sensor.			

Fire Alarm / Suppression Functional Tests (Copy and paste for Fire Alarm Panels that apply)

ITEM#	DESCRIPTION	ACCEPT	REJECT	REMARKS
5.4.59	Verify, if any, the wiring of alarms or trips between the Fire Alarm panel and HVAC controller.			

Lighting Contactors, Switches, and circuits (Copy and paste for equipment that apply)

ITEM#	DESCRIPTION	ACCEPT	REJECT	REMARKS
5.4.60	Verify the wiring of internal wall switches.			
5.4.61	Verify HOA switch functions correctly with external lighting.			
5.4.62	Verify operation of Emergency lighting.			

Breaker Test Cabinets (Copy and paste for equipment that apply)

ITEM#	DESCRIPTION	ACCEPT	REJECT	REMARKS
5.4.63	Verify there is sufficient access from the breaker cubicle to the test cabinet.			

Kiewit

5.4.64	Verify the operation of the breaker test cabinet close and open test switch with at least one breaker.			

Misc. PDC Equipment Functional Tests (Copy and paste for any equipment not mentioned above with interconnecting wiring in the PDC that apply)

ITEM#	DESCRIPTION	ACCEPT	REJECT	REMARKS
5.4.65	Verify the wiring of alarms or trips between equipment in the PDC.			

DRAFT

Kiewit

6. **PUNCH LIST (ATTACHED)**

DRAFT

Kiewit

7. **ACKNOWLEDGMENT OF FACTORY ACCEPTANCE TEST COMPLETION:**

FACTORY ACCEPTANCE TEST INSPECTORS

Name	Title	Signature	Date

DRAFT

APPENDIX E

CABLE BUS ARRANGEMENT DRAWINGS

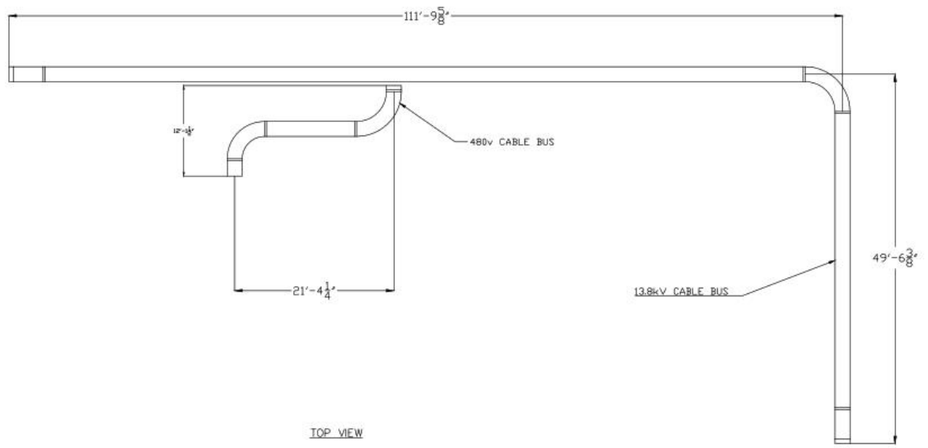

TOP VIEW

NOTES:

1. 480V CABLE BUS LAYOUT IS DUPLICATED FOR BOTH EGR AND BOP ELECTRICAL ENCLOSURES.

REFERENCE DRAWINGS:

1. 20041223-PP-001 PLOT PLAN
2. 20041223-EA-001 ELECTRICAL ARRANGEMENT DRAWING

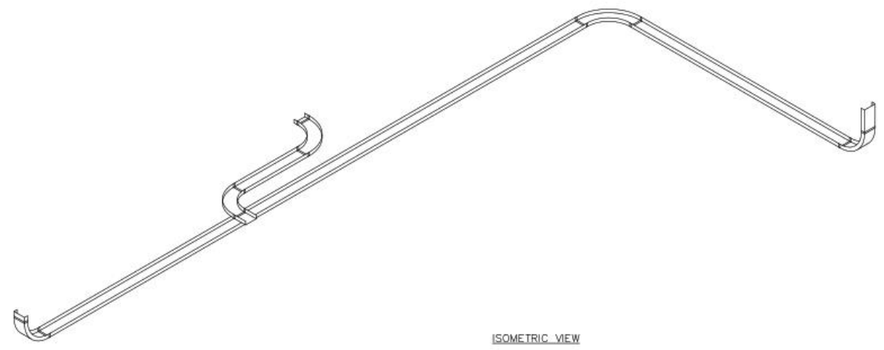

ISOMETRIC VIEW

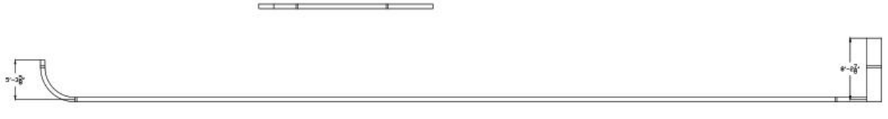

TOP VIEW

- PRELIMINARY -
NOT FOR CONSTRUCTION

REV	DESIGN BY	CHECKED BY	DATE
A	ISSUED FOR REVIEW		
	J. HIGHTOWER	N. MECHLER	04-28-23

GE/SOUTHERN/LINDE

GE/SOUTHERN/LINDE ADVANCED NGCC INTEGRATION

Klewit

CABLE BUS LAYOUT

ENGINEER/DESIGN ORIGINATOR	J. HIGHTOWER
LEAD ENG	N. MECHLER
ENG MGR	B. LOFGREEN
PROJ MGR	B. LOFGREEN

DRAWING NUMBER

20041223-ET-001

Appendix II

OSBL Cable Bus Specification

Kiewit

SPECIFICATIONS FOR
CABLE BUS

94.03.12.150

GE / SOUTHERN / LINDE ADVANCED NGCC

KIEWIT PROJECT NO. 20041223

ISSUED: MAY 5, 2023

REVISION 0 – ISSUED FOR FEED

TECHNICAL SPECIFICATIONS

TABLE OF CONTENTS

TITLE		Pages	Revision
1B	Section 1B	1B-1 – 1B-5	0
1E	Cable Bus Specification	1E-1 – 1E-4	0
TECHNICAL REQUIREMENTS			
APPENDIX A	General Arrangement Drawings	1 page	0
APPENDIX B	Overall One-Line	2 pages	0
GENERAL REQUIREMENTS			
E2	Seller Furnished Controls and Wiring	E2-1 – E2-12	
S1	Structural Loading and Design	S1-1 – S1-10	

ESTIMATING SECTION 1B

1. SITE DESIGN CONDITIONS: The Site conditions to be used as design and performance criteria are as follows:

   - Main Plant Finish Grade Elevation (Mean Sea Level) : 23 feet
   - Barometric pressure: 14.7 psia
   - High Ambient Temperature: 105 ° F
   - Low Ambient Temperature: 0 ° F
   - Temperature; Indoor Ambient (Dry Bulb)
     Occupied areas (Air Conditioned) 65 ° F to 75 ° F
     Non-occupied areas (Ventilated and Heated only) 40 ° F to 100 ° F

2. UTILITIES FOR COOLED EQUIPMENT:

   - Instrument Air Pressure Range: 60 – 120 psig
   - Design temperature for air cooled equipment: 105 ° F
   - Design cooling water inlet temperature for water-cooled equipment: 86 ° F
   - Cooling Water Composition 0% propylene glycol/100% water
   - Cooling Water Design Pressure 150 psig
   - Cooling Water Pressure Drop/Temperature Rise (NTE): 10psi /20 ° F

3. STRUCTURAL:

   - Precipitation: Average rainfall: 64 inches/year
   - Design 24 hour Storm Event 25 year / 100 year: 10.3 inches / 14.0 inches
   - Design Snow Loading: 0 psf ground / 0 psf roof (ASCE 7-16)
   - Minimum Design Basic Wind Speed: 153 mph (ASCE 7-16 – Risk Category III)
   - Design Wind Load and importance factor: I_w=1.00 (ASCE 7-16)
   - Exposure: C

ESTIMATING SECTION 1B

- Seismic Loading: Seismic Importance Factor I=1.25
  Occupancy / Risk Category III
  Site Class D
  Spectral Response Accelerations S_S=0.095 g, S_1=0.059 g
  Site coefficients F_a=1.6 and F_v=2.4
  Spectral Response Coefficients S_{DS}=0.109 g, S_{D1}=0.102 g
  Seismic Design Category B
  ATC Hazards by Location (ASCE 7-16)
- Winter Design: Freeze Protection is required; Frost depth = 12”
- Design life of the Facility: 30 years

4. NOISE CONTROL:

   Near Field: The A-weighted sound pressure level resulting from the operation of equipment furnished under these specifications (including drive motors) shall not exceed a free-field average (per piece of equipment) of 85 dBA along the equipment envelope at a height of 5 feet (1.5 meters) above the ground and personnel platforms. The equipment envelope is the perimeter line that completely encompasses the equipment package (including noise control devices) at a distance of 3 feet (1 meter) from the equipment face.

   Far Field: The A-weighted sound pressure level (dBA) at 400 ft from the emission source should be provided for EPC to evaluate the overall plant noise level at the plant boundary.

5. SITE ACCESS:

   The jobsite is located at Plant Barry in Bucks, Alabama. The jobsite can be accessed from the following:

   Road: The site is accessible from Highway 43

   Rail: No site rail access.

   Barge: Barge can be transported via the Mobile River through the Mobile Bay.

6. ADDITIONAL SITE CONSIDERATIONS:

7. GENERAL DESIGN REQUIREMENTS:
   a. Asbestos-containing materials will not be allowed.

ESTIMATING SECTION 1B

b. Only proven and tested technology fo the same model or nominal size and design conditions and in successful operation for at least five years in the exact same application shall be provided. There shall be no exception to this clause.

c. For projects located in Canada, CRN certification and local province requirements shall be incorporated into the equipment and pressure piping system design.

d. Mandatory Construction and Commissioning: One complete set of parts indicated in the Seller's documentation requiring to be replaced during the Construction, Testing or Startup phases of the Project (Mandatory Construction and Commissioning Parts) shall be included in the Seller's scope. For example, manway gaskets, hydro kit gaskets, or other that are routinely replaced after inspections and tests.

e. Pump Designs:Shut-off head at design speed shall be between 115 and 140% of the maximum total dynamic head (excluding circulating water pumps).

f. All rotating components and assemblies shall be dynamically balanced in accordance with Table 1 of ISO 1940.

g. Piping Design:
   i. Unless otherwise indicated in this specification, the minimum carbon steel piping schedule for NPS 2-1/2" and larger is STD, for 2" and smaller is Schedule 80.
   ii. Unless otherwise indicated in this specification, the minimum stainless steel piping schedule for NPS 2-1/2" and larger is 10S, for 2" and smaller is Schedule 40S.
   iii. Minimum allowable resultant force at each equipment nozzle shall be 250 lbs per nominal pipe size (NPS), and the minimum allowable resultant moment at each equipment nozzle shall be 500 ft-lbs per NPS. For instance, a 4 inch nozzle shall be designed for minimum 1,000 lbs resultant force and 2,000 ft-lbs resultant moment.
   iv. For skidded and Seller provided piping, high point vents and low point drains shall be provided. Vents and drains shall normally be isolated with globe valves and gate valves respectively, in liquid service. Ball valves shall be provided for vents & drains in natural gas and air services.
   v. Corrosion Allowance: Pipe wall thickness shall be calculated using the following corrosion allowances:
      - Carbon & Low/Intermediate Alloy Steels: 0.020"
      - Creep Strength Enhanced Ferritic (CSEF) Steels – 0.060"
      - Stainless Steel and Nickel Alloys : 0.000"
   vi. Steel flanges 2-1/2 inch and larger except for grooved pipe shall be weld neck, slip-on type is permitted for class 150 only, and all steel flanges 2 inch and smaller shall be of the socket type.
   vii. Fittings for tubing shall be flareless compression type, Swagelok or Parker Type 316 stainless steel.

ESTIMATING SECTION 1B

viii. All vent and drain islolation valves and instrument root valves rated ASME Class 900 or greater shall utilize double block root valves.
ix. Valve Actuators: Gear actuators shall be used on all valve sizes greater than 6 inch, and on any valve requiring more than 75 pounds rim pull to operate the valve at the maximum differential pressure.
x. All valve bonnets for valves with design temperatures of 150F or higher shall be provided with bonnet over pressure protection.

h. Approved Vendors:
i. Steel body gate, globe, angle, and check valves shall be manufactured by Velan, Crane, Pacific Valves, Anderson Greenwood-Crosby, Edward Vogt, SPX Corporation, Fisher Controls International, or Dresser, Inc.
ii. Butterfly valves shall be manufactured by Bray, Crane, Xomox, Ebro, Amri, or Centerline.
iii. Control valves shall be manufacturered by Fisher, Valtek, Leslie, Koso, or CCI.
iv. Coupling shall be of the flexible spacer type by Falk, Zurn, or engineer approved equal.
v. Instruments shall be manufacturered by:
- Transmitters: Rosemount, Foxboro
- Level Gauges: Jerguson
- Pressure Gauges, Temperature Switches: Ashcroft
- Temperature Gauges: Ashcroft EI case style
- Pressure and Differential Pressure Switches: Ashcroft, Merriam, Midwest
- Level Switches: Magnetrol, SOR, Jerguson/Magne-Sonics
- Solenoid Valves: ASCO
- Critical Service Flow Elements:, Triad, Fluidic Technologies, PFS
- Non-Critical Service Flow Elements: Dietrich Standard, Deltabar/Midwest Instruments, Veris
- Heated Instrument Enclosure: O'Brien

i. General Weld Requirements:
- Structural steel welding shall be in accordance with the applicable AWS welding code.
- Welding of fluid-conveying, non-structural steel, piping and pressure-containing materials shall be in accordance with ASME BPVC Section IX.

8. Quality and Examination Requirements:
a. Seller and Seller's sub-suppliers shall have a Quality Management System, approved by the buyer, in accordance with ISO9001. The Seller shall provide transparent supply chain integrity for the material sources.

b. Records in accordance to referenced code shall be maintained and available for submittal to the Buyer upon request. These records include but are not limited to:
i. Material Test Reports (MTR) of base and welding materials
ii. Welding Procedure Specification (WPS) and supporting Procedure Qualification Record (PQR)

ESTIMATING SECTION 1B

iii. Heat Treatment Records
iv. Final Non Destructive Examination (NDE) reports
v. Repair records
vi. Personnel qualification records
vii. Nonconformance reports
viii. Manufacture's Data Reports (MDR)

END OF SECTION

Project: GE/Southern/Linde Advanced NGCC Integration
KED #: 20041223
Revision: 0

SPECIFICATION 94.03.12.150
480V LV Cable Bus

Item	Description	Specified Data	By Bidder	See Note	Rev. #
	Specification Summary				
This specification covers the design, fabrication, testing and delivery of a cable bus system in accordance with this specification and stated Standards. Site parameters can be found in additional attachments.					
1	**General Requirements**				
1.01	Quantity (Sets)	**Two (2) Sets**			
1.02	Nominal Operating Voltage (V rms)	**480**			
1.03	Rated BIL (kV)	**N/A**			
1.04	Rated Cable Ampacity (A)	**4000**			
1.05	Rated Short Circuit Current Withstand (Symm kA)	**65**			
1.06	Cable Requirements:				
1.07	Insulation Type	**Manufacturer's Standard**			
1.08	Insulation Level	**100%**			
1.09	Jacket	**Manufacturer's Standard**			
1.10	Conductor Material	**Copper**			
1.11	Tray Requirements				
1.12	Construction	**6063-T6 Aluminum**			
1.13	Covers	**Louvered Indoor/Solid Outdoor**			
1.14	Fiberglass Cable Support Blocks (18" vertical, 36" horizontal)	**N/A**			
1.15	Color	**ANSI 61 Light Gray**			
1.16	Frequency (Hz)	**60**			
2	**Quantities per Set**				
2.01	Length (3-Phase feet)	**See Cable Bus Layout**			
2.02	Description	**See Cable Bus Layout**			
2.03	Quantity of 3-Phase 90° Vertical Elbows	**See Cable Bus Layout**			
2.04	Quantity of 3-Phase 90° Horizontal Elbows	**See Cable Bus Layout**			
2.05	Quantity of 3-Phase Taps	**See Cable Bus Layout**			
2.06	Quantity of Wall Penetrations (Not Fire Rated)	**N/A**			
2.07	Quantity of Wall Penetrations (Fire Rated)	**See Cable Bus Layout**			
2.08	Quantity of 3-Phase Phase Spacing Transitions	**See Cable Bus Layout**			
3	**Total Terminations**				
3.01	Main Power Transformer	**N/A**			
3.02	Auxiliary Transformer	**N/A**			
3.03	Station Service Transformer	**Two (2) Sets**			
3.04	Medium Voltage Switchgear	**N/A**			
3.05	Low Voltage Switchgear	**Two (2) Sets**			
4	**Additional Items**				
4.01	Solar Radiation Shield	**As Required**			
4.02	Support Steel for Cable Bus	**Not included**			
4.03	Connection Hardware and Flex Links	**Include in Supply**			
4.04	Grounding cable for cable bus run including clamps	**Include in Supply**			
5	**Spare Parts**				
5.01	Manufacturer Recommended Start-Up Spare Parts	**Include**			
5.02	Manufacturer Recommended Two-Year Spare Parts	**Do Not Include**			
6	**Drawings Supplied as part of this Specification**				
6.01	General Arrangement	**No**			
6.02	One-Line Diagram	**No**			
6.03	Cable Bus Routing	**Yes**			
7	**Required Testing**				
7.01	Manufacturer's Standard Testing	**Include**			
7.02	ANSI Recommended Tests				
7.03	Rated Frequency Withstand Test	**Include**			
7.04	Impulse Withstand Test (BIL)	**Include**			
7.05	Short Circuit Current Test	**Include**			
7.06	Temperature Rise Test	**Include**			
8	**Codes and Standards**				
8.01	Follow All the Latest Applicable Standards and Codes Including but Not Limited To:				
8.02	American Institute of Steel Contruction (AISC)				
8.03	American National Standards Institute (ANSI)				
8.04	ANSI C29				
8.05	American Society of Testing and Materials (ASTM)				
8.06	Canadian Electrical Code (CEC)	**N/A**			
8.07	Canadian Standards Association (CSA)	**N/A**			
8.08	Institute of Electrical and Electronic Engineers (IEEE)				
8.09	IEEE C29				
8.10	IEEE C37.23				
8.11	National Electric Code (NEC)				
8.12	NEC Article 250				
8.13	NEC Article 300				
8.14	NEC Article 370				
8.15	National Electric Safety Code (NESC)				
8.16	National Electrical Manufacturers Association (NEMA)				
8.17	NEMA VE-1				
8.18	NEMA VE-2				
8.19	National Fire Protection Association (NFPA)				
8.20	Underwriters Laboratories (UL)				
8.21	Other				
9	**Additional Data to be supplied by Vendor**				
9.01	Assembly Dimensions (inches)				
9.02	Average Assembled Weight (lbs/3-phase ft)				
9.03	Total Loss per 3-Phase Foot (watts)				
9.04	Add/Deduct Pricing				

9.05	Per foot add/deduct	
9.06	Non-Fire-Rated 3-Phase Wall Transition ($/ea)	
9.07	2-Hour Fire-Rated 3-Phase Wall Transition ($/ea)	
9.08	3-Phase Equipment Termination ($/ea)	
10	**Additional Comments**	
10.01		

Project: GE/Southern/Linde Advanced NGCC Integration
KED #: 20041223
Revision: 0

SPECIFICATION 94.03.12.150
13.8kV MV Cable Bus

Item	Description	Specified Data	By Bidder	See Note	Rev. #
	Specification Summary				
This specification covers the design, fabrication, testing and delivery of a cable bus system in accordance with this specification and stated Standards. Site parameters can be found in additional attachments.					
1	**General Requirements**				
1.01	Quantity (Sets)	One (1) Set			
1.02	Nominal Operating Voltage (V rms)	13800			
1.03	Rated BIL (kV)	110			
1.04	Rated Cable Ampacity (A)	3000			
1.05	Rated Short Circuit Current Withstand (Symm kA)	50			
1.06	Cable Requirements:				
1.07	Insulation Type	Ethylene Propylene Rubber (EPR)			
1.08	Insulation Level	133%			
1.09	Jacket	CPE or Hypalon			
1.10	Conductor Material	Copper			
1.11	Tray Requirements				
1.12	Construction	6063-T6 Aluminum			
1.13	Covers	Louvered Indoor/Solid Outdoor			
1.14	Fiberglass Cable Support Blocks (18" vertical, 36" horizontal)	N/A			
1.15	Color	ANSI 61 Light Gray			
1.16	Frequency (Hz)	60			
2	**Quantities per Set**				
2.01	Length (3-Phase feet)	See Cable Bus Layout			
2.02	Description	See Cable Bus Layout			
2.03	Quantity of 3-Phase 90° Vertical Elbows	See Cable Bus Layout			
2.04	Quantity of 3-Phase 90° Horizontal Elbows	See Cable Bus Layout			
2.05	Quantity of 3-Phase Taps	See Cable Bus Layout			
2.06	Quantity of Wall Penetrations (Not Fire Rated)	N/A			
2.07	Quantity of Wall Penetrations (Fire Rated)	See Cable Bus Layout			
2.08	Quantity of 3-Phase Phase Spacing Transitions	See Cable Bus Layout			
3	**Total Terminations**				
3.01	Main Power Transformer	One (1) Set			
3.02	Auxiliary Transformer	N/A			
3.03	Station Service Transformer	N/A			
3.04	Medium Voltage Switchgear	One (1) Set			
3.05	Low Voltage Switchgear	N/A			
4	**Additional Items**				
4.01	Solar Radiation Shield	As Required			
4.02	Support Steel for Cable Bus	Not included			
4.03	Connection Hardware and Flex Links	Include in Supply			
4.04	Grounding cable for cable bus run including clamps	Include in Supply			
5	**Spare Parts**				
5.01	Manufacturer Recommended Start-Up Spare Parts	Include			
5.02	Manufacturer Recommended Two-Year Spare Parts	Do Not Include			
6	**Drawings Supplied as part of this Specification**				
6.01	General Arrangement	No			
6.02	One-Line Diagram	Yes			
6.03	Cable Bus Routing	Yes			
7	**Required Testing**				
7.01	Manufacturer's Standard Testing	Include			
7.02	ANSI Recommended Tests				
7.03	Rated Frequency Withstand Test	Include			
7.04	Impulse Withstand Test (BIL)	Include			
7.05	Short Circuit Current Test	Include			
7.06	Temperature Rise Test	Include			
8	**Codes and Standards**				
8.01	Follow All the Latest Applicable Standards and Codes Including but Not Limited To				
8.02	American Institute of Steel Contruction (AISC)				
8.03	American National Standards Institute (ANSI)				
8.04	ANSI C29				
8.05	American Society of Testing and Materials (ASTM)				
8.06	Canadian Electrical Code (CEC)	N/A			
8.07	Canadian Standards Association (CSA)	N/A			
8.08	Institute of Electrical and Electronic Engineers (IEEE)				
8.09	IEEE C29				
8.10	IEEE C37.23				
8.11	National Electric Code (NEC)				
8.12	NEC Article 250				
8.13	NEC Article 300				
8.14	NEC Article 370				
8.15	National Electric Safety Code (NESC)				
8.16	National Electrical Manufacturers Association (NEMA)				
8.17	NEMA VE-1				
8.18	NEMA VE-2				
8.19	National Fire Protection Association (NFPA)				
8.20	Underwriters Laboratories (UL)				

8.21	Other	
9	**Additional Data to be supplied by Vendor**	
9.01	Assembly Dimensions (inches)	
9.02	Average Assembled Weight (lbs/3-phase ft)	
9.03	Total Loss per 3-Phase Foot (watts)	
9.04	Add/Deduct Pricing	
9.05	Per foot add/deduct	
9.06	Non-Fire-Rated 3-Phase Wall Transition ($/ea)	
9.07	2-Hour Fire-Rated 3-Phase Wall Transition ($/ea)	
9.08	3-Phase Equipment Termination ($/ea)	
10	**Additional Comments**	
10.01		

APPENDIX A

GENERAL ARRANGEMENT DRAWINGS

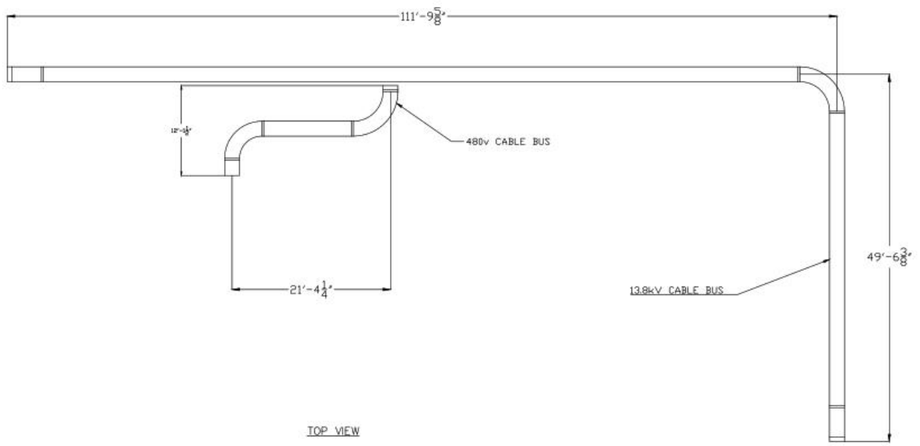

TOP VIEW

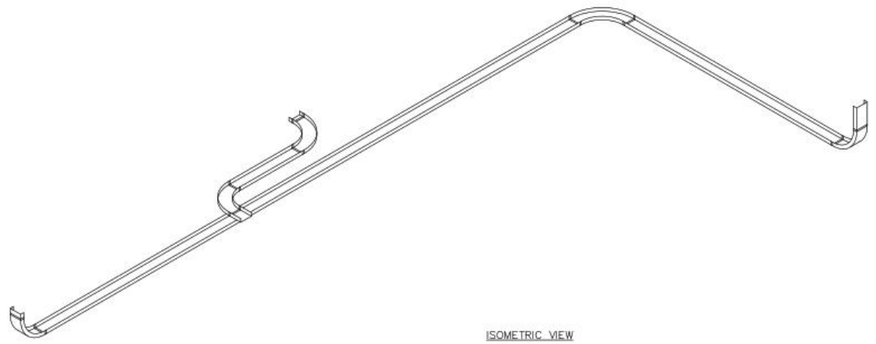

ISOMETRIC VIEW



TOP VIEW

NOTES:

1. 480V CABLE BUS LAYOUT IS DUPLICATED FOR BOTH EGR AND BOP ELECTRICAL ENCLOSURES.

REFERENCE DRAWINGS:

1. 20041223-PP-001 PLOT PLAN
2. 20041223-EA-001 ELECTRICAL ARRANGEMENT DRAWING

- PRELIMINARY -
NOT FOR CONSTRUCTION

REV	DESIGN BY	CHECKED BY	DATE
A	ISSUED FOR REVIEW		
	J. HIGHTOWER	N. MECHLER	04-28-23

GE/SOUTHERN/LINDE

GE/SOUTHERN/LINDE ADVANCED NGCC INTEGRATION

Klewit

CABLE BUS LAYOUT

ENGINEER/DESIGN ORIGINATOR	J. HIGHTOWER
LEAD ENG	N. MECHLER
ENG MGR	B. LORGREEN
PROJ MGR	B. LORGREEN

DRAWING NUMBER

20041223-ET-001

APPENDIX B

OVERALL ONE-LINE

NOTES:

1. RESISTANCE RATED FOR 800 A FOR 10 SECONDS.
2. RESISTANCE RATED FOR 5A CONTINUOUS.
3. ALL MEDIUM VOLTAGE CIRCUIT BREAKERS AND LOW VOLTAGE SWITCHGEAR BREAKERS SHALL BE ELECTRICALLY OPERATED.
4. MOTOR SUPPLIED BY GE.

REFERENCE DRAWINGS:

20041223-EO-001	OVERALL ONE LINE (1 OF 2)
(LATER)	LINDE CARBON CAPTURE TRAIN ONE-LINE

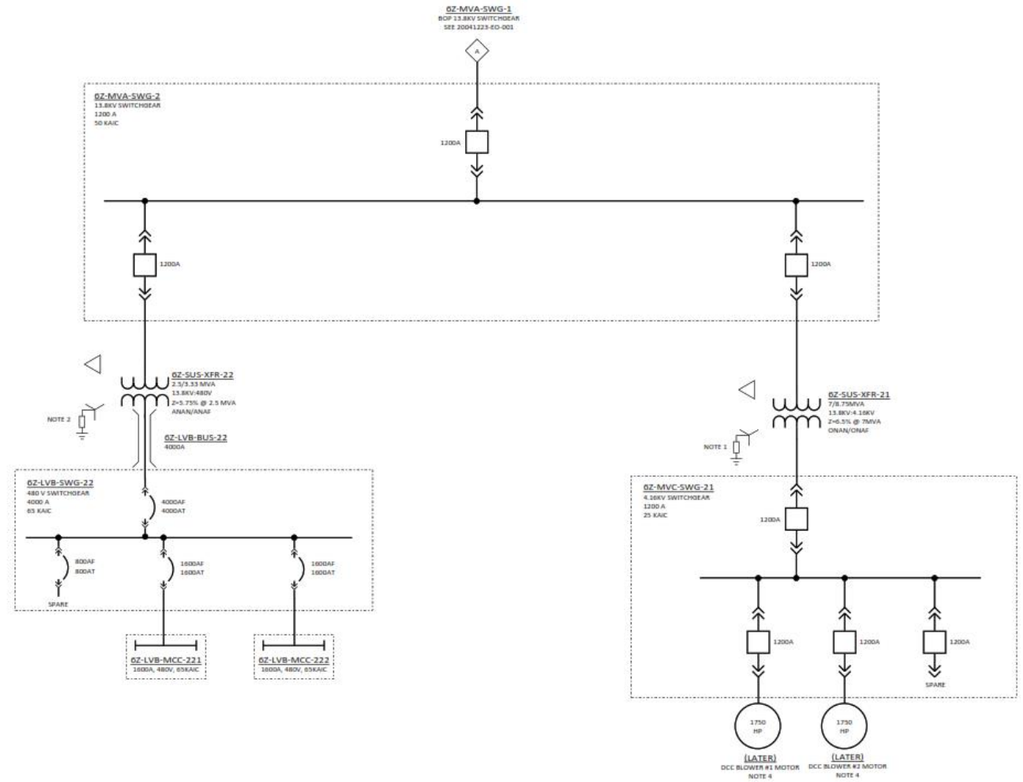

- PRELIMINARY -
NOT FOR CONSTRUCTION

REV	DESIGN BY	CHECKED BY	DATE
1	ISSUED FOR FEED N. MECHLER	K. SHERMAN	4/21/23

GE/SOUTHERN/LINDE

GE/SOUTHERN/LINDE ADVANCED NGCC INTEGRATION

Kiewit

ELECTRICAL ONE LINE DIAGRAM
OVERALL ONE LINE (2 OF 2)

		DRAWING NUMBER
ENGINEER/DESIGN ORIGINATOR	N. MECHLER	20041223-EO-002
LEAD ENG	N. MECHLER	
ENG MGR	B. LOFGREEN	
PROJ MGR	B. LOFGREEN	

Appendix JJ

OSBL DCS Specification

Kiewit

SPECIFICATIONS FOR
DISTRIBUTED CONTROL SYSTEM (DCS)

94.03.18.100

GE / SOUTHERN / LINDE ADVANCED NGCC

KIEWIT PROJECT NO. 20041223

ISSUED: APRIL 28, 2023

REVISION 0 – ISSUED FOR FEED

TECHNICAL SPECIFICATIONS

TABLE OF CONTENTS

TITLE		Pages	Revision
1B	Section 1B	1B-1 – 1B-5	0
1E	DCS Specification	1E-1 – 1E-2	0
TECHNICAL REQUIREMENTS			
APPENDIX A	Overall Communication Diagram	1 page	0
APPENDIX B	DCS Graphic Standard	12 pages	0
APPENDIX C	Historical Data Report Format	1 page	0
GENERAL REQUIREMENTS			
E2	Seller Furnished Controls and Wiring	E2-1 – E2-12	
I1	Programmable Logic Controllers & Network Equipment	I1-1 – I1-6	
I3	Cybersecurity Requirements	I3-1 – I3-9	
S1	Structural Loading and Design	S1-1-S1-10	

ESTIMATING SECTION 1B

1. SITE DESIGN CONDITIONS: The Site conditions to be used as design and performance criteria are as follows:

   - Main Plant Finish Grade Elevation (Mean Sea Level) : 23 feet
   - Barometric pressure: 14.7 psia
   - High Ambient Temperature: 105 ° F
   - Low Ambient Temperature: 0 ° F
   - Temperature; Indoor Ambient (Dry Bulb)
     Occupied areas (Air Conditioned) 65 ° F to 75 ° F
     Non-occupied areas (Ventilated and Heated only) 40 ° F to 100 ° F

2. UTILITIES FOR COOLED EQUIPMENT:

   - Instrument Air Pressure Range: 60 – 120 psig
   - Design temperature for air cooled equipment: 105 ° F
   - Design cooling water inlet temperature for water-cooled equipment: 86 ° F
   - Cooling Water Composition 0% propylene glycol/100% water
   - Cooling Water Design Pressure 150 psig
   - Cooling Water Pressure Drop/Temperature Rise (NTE): 10psi /20 ° F

3. STRUCTURAL:

   - Precipitation: Average rainfall: 64 inches/year
   - Design 24 hour Storm Event 25 year / 100 year: 10.3 inches / 14.0 inches
   - Design Snow Loading: 0 psf ground / 0 psf roof (ASCE 7-16)
   - Minimum Design Basic Wind Speed: 153 mph (ASCE 7-16 – Risk Category III)
   - Design Wind Load and importance factor: I_w=1.00 (ASCE 7-16)
   - Exposure: C

ESTIMATING SECTION 1B

- Seismic Loading: Seismic Importance Factor I=1.25
  Occupancy / Risk Category III
  Site Class D
  Spectral Response Accelerations S_S=0.095 g, S_1=0.059 g
  Site coefficients F_a=1.6 and F_v=2.4
  Spectral Response Coefficients S_{DS}=0.109 g, S_{D1}=0.102 g
  Seismic Design Category B
  ATC Hazards by Location (ASCE 7-16)
- Winter Design: Freeze Protection is required; Frost depth = 12”
- Design life of the Facility: 30 years

4. NOISE CONTROL:

   Near Field: The A-weighted sound pressure level resulting from the operation of equipment furnished under these specifications (including drive motors) shall not exceed a free-field average (per piece of equipment) of 85 dBA along the equipment envelope at a height of 5 feet (1.5 meters) above the ground and personnel platforms. The equipment envelope is the perimeter line that completely encompasses the equipment package (including noise control devices) at a distance of 3 feet (1 meter) from the equipment face.

   Far Field: The A-weighted sound pressure level (dBA) at 400 ft from the emission source should be provided for EPC to evaluate the overall plant noise level at the plant boundary.

5. SITE ACCESS:

   The jobsite is located at Plant Barry in Bucks, Alabama. The jobsite can be accessed from the following:

   Road: The site is accessible from Highway 43

   Rail: No site rail access.

   Barge: Barge can be transported via the Mobile River through the Mobile Bay.

6. ADDITIONAL SITE CONSIDERATIONS:

7. GENERAL DESIGN REQUIREMENTS:
   a. Asbestos-containing materials will not be allowed.

ESTIMATING SECTION 1B

b. Only proven and tested technology fo the same model or nominal size and design conditions and in successful operation for at least five years in the exact same application shall be provided. There shall be no exception to this clause.

c. For projects located in Canada, CRN certification and local province requirements shall be incorporated into the equipment and pressure piping system design.

d. Mandatory Construction and Commissioning: One complete set of parts indicated in the Seller's documentation requiring to be replaced during the Construction, Testing or Startup phases of the Project (Mandatory Construction and Commissioning Parts) shall be included in the Seller's scope. For example, manway gaskets, hydro kit gaskets, or other that are routinely replaced after inspections and tests.

e. Pump Designs:Shut-off head at design speed shall be between 115 and 140% of the maximum total dynamic head (excluding circulating water pumps).

f. All rotating components and assemblies shall be dynamically balanced in accordance with Table 1 of ISO 1940.

g. Piping Design:
   i. Unless otherwise indicated in this specification, the minimum carbon steel piping schedule for NPS 2-1/2" and larger is STD, for 2" and smaller is Schedule 80.
   ii. Unless otherwise indicated in this specification, the minimum stainless steel piping schedule for NPS 2-1/2" and larger is 10S, for 2" and smaller is Schedule 40S.
   iii. Minimum allowable resultant force at each equipment nozzle shall be 250 lbs per nominal pipe size (NPS), and the minimum allowable resultant moment at each equipment nozzle shall be 500 ft-lbs per NPS. For instance, a 4 inch nozzle shall be designed for minimum 1,000 lbs resultant force and 2,000 ft-lbs resultant moment.
   iv. For skidded and Seller provided piping, high point vents and low point drains shall be provided. Vents and drains shall normally be isolated with globe valves and gate valves respectively, in liquid service. Ball valves shall be provided for vents & drains in natural gas and air services.
   v. Corrosion Allowance: Pipe wall thickness shall be calculated using the following corrosion allowances:
      - Carbon & Low/Intermediate Alloy Steels: 0.020"
      - Creep Strength Enhanced Ferritic (CSEF) Steels – 0.060"
      - Stainless Steel and Nickel Alloys : 0.000"
   vi. Steel flanges 2-1/2 inch and larger except for grooved pipe shall be weld neck, slip-on type is permitted for class 150 only, and all steel flanges 2 inch and smaller shall be of the socket type.
   vii. Fittings for tubing shall be flareless compression type, Swagelok or Parker Type 316 stainless steel.

ESTIMATING SECTION 1B

viii. All vent and drain islolation valves and instrument root valves rated ASME Class 900 or greater shall utilize double block root valves.
ix. Valve Actuators: Gear actuators shall be used on all valve sizes greater than 6 inch, and on any valve requiring more than 75 pounds rim pull to operate the valve at the maximum differential pressure.
x. All valve bonnets for valves with design temperatures of 150F or higher shall be provided with bonnet over pressure protection.

h. Approved Vendors:
i. Steel body gate, globe, angle, and check valves shall be manufactured by Velan, Crane, Pacific Valves, Anderson Greenwood-Crosby, Edward Vogt, SPX Corporation, Fisher Controls International, or Dresser, Inc.
ii. Butterfly valves shall be manufactured by Bray, Crane, Xomox, Ebro, Amri, or Centerline.
iii. Control valves shall be manufacturered by Fisher, Valtek, Leslie, Koso, or CCI.
iv. Coupling shall be of the flexible spacer type by Falk, Zurn, or engineer approved equal.
v. Instruments shall be manufacturered by:
- Transmitters: Rosemount, Foxboro
- Level Gauges: Jerguson
- Pressure Gauges, Temperature Switches: Ashcroft
- Temperature Gauges: Ashcroft EI case style
- Pressure and Differential Pressure Switches: Ashcroft, Merriam, Midwest
- Level Switches: Magnetrol, SOR, Jerguson/Magne-Sonics
- Solenoid Valves: ASCO
- Critical Service Flow Elements:, Triad, Fluidic Technologies, PFS
- Non-Critical Service Flow Elements: Dietrich Standard, Deltabar/Midwest Instruments, Veris
- Heated Instrument Enclosure: O'Brien

i. General Weld Requirements:
- Structural steel welding shall be in accordance with the applicable AWS welding code.
- Welding of fluid-conveying, non-structural steel, piping and pressure-containing materials shall be in accordance with ASME BPVC Section IX.

8. Quality and Examination Requirements:
a. Seller and Seller's sub-suppliers shall have a Quality Management System, approved by the buyer, in accordance with ISO9001. The Seller shall provide transparent supply chain integrity for the material sources.

b. Records in accordance to referenced code shall be maintained and available for submittal to the Buyer upon request. These records include but are not limited to:
i. Material Test Reports (MTR) of base and welding materials
ii. Welding Procedure Specification (WPS) and supporting Procedure Qualification Record (PQR)

ESTIMATING SECTION 1B

iii. Heat Treatment Records
iv. Final Non Destructive Examination (NDE) reports
v. Repair records
vi. Personnel qualification records
vii. Nonconformance reports
viii. Manufacture's Data Reports (MDR)

END OF SECTION

Project Name:	GE/Southern/Linde Advanced NGCC Integration
Project Number:	20041223
Rev:	0

Numbers below do not include the spare margin listed.

I/O Spare:	20 %
Cabinet Spare:	20 %

IO Count

	DI	DI_SOE	DO	DO_10A	AI	AO	TE	RTD	Fieldbus	Bus Link	Wireless	Datalink	Total	
ISBL Elec Encl	0	0	0	0	0	0	0	0	0	0	0	0	0	TO BE UPDATED LATER
OSBL Elec Encl	96	0	35	0	63	1	0	0	7	0	0	7	209	
Cooling Twr	15	0	0	0	7	0	0	0	12	0	0	0	34	
EGR	123	0	37	0	34	1	0	0	1	0	0	5	201	
TOTAL=	234	0	72	0	104	2	0	0	20	0	0	12	**444**	

1	Workstations and Printers			
		1	Engineering Workstation with dual 24" monitors	
		2	Operator Workstations with dual 43" monitors	
		0	Temporary workstation for use during commissioning	
		0	Anti-Virus Workstation	
		1	Historian Workstation with dual 24" monitors	
		0	Asset Management Workstation	
		1	ISBL Equipment workstation	
		1	Inkjet Printer	
		1	Laser Color Printer	
2	Foreign Device Interfaces (Datalinks)			
		Redund	**Points**	**Eqiupment Type and Protocol**
		Y	250	MV Relays, Swgr, MCCs - Modbus Ethernet
		Y	250	LV Relays, Swgr, MCCs - Modbus Ethernet
		Y	200	Switchyard RTU - Modbus Ethernet
		N	50	Air Compressor - Modbus Ethernet
4	Number of BOP Graphics			
		50	Custom Graphic Displays	
		20	Trend Displays	
		1 LOT	Periodic, Trip, SOE Logs	
		160	Permissive Displays (pop-ups)	
6	NERC CIP - Version 6 Compliant			
	place "x" next to equipment to be included		Security Information and Event Management System (SIEM) capable of third party interface (Medium impact rating only)	
			Patch Management System capable of third party interface (Medium impact rating only)	
		x	Firewall via DMZ router (Low or Medium impact)	
			Keypad or Badge Reader Entry for Cabinets for cabinets outside of PSP (Medium impact only)	
7	Additional Hardware			
		1 LOT	Operator Console/Control Room Furniture	
			1	Emergency Stop Pushbutton Panel with 1 button
		1	Network Time Server/Satellite Clock-Symmetricom XLi 1U or equal with minimum of 4 IRIG-B AM outputs	
		1	IRIG-B Distribution Amplifier	
		0	Configurable Ethernet Switch	
		1 LOT	Network Equipment - All routers, switches, media converters, etc. required for DCS use	
		0	Shipped loose - Fiber to Ethernet Copper Media Converters (Etherwan EL-900 or Equal)	
		0	Shipped loose - Fiber to Serial Copper Media Converters (MED-100A or Equal)	
		0	Spare Network cabinet with dual power feed terminals, transfer switch(es), five shelves for misc. equipment, and a rack mounted patch panel capable of accepting 32 ST fiber connections, and a 16 bay media converter rack (Etherwan EMC1600 or similar) with Fiber to Ethernet media converters (Etherwan EL-110 or Similar).	
		0	Marshalling Cabinets and disconnect terminal blocks	
8	Factory Acceptance Test - Buyer/Owner Witness			
		1	Weeks for Power Block	
		1	Week for Datalink Communication Test including simulation of each datalink	
		0	Additional week for atypical DCS control	
9	Additional Options			
		3	Engineering Software Licenses (One permanent, two additional for use during commissioning)	
		1	Detailed Operation and Maintenance (O&M) documentation	
10	Shipments			
			Electrical Enclosure Vendor (Location TBD)	
				BOP Electrical Enclosure DCS Cabinets
				BOP Electrical Enclsoure Network Cabinets
				EGR Electrical Enclsoure RIO Cabinet
			Site (Bucks, Alabama-Plant Barry)	
				Operator and Engineering Workstations
				ISBL Equipment Workstation
				ISBL Electrical Enclosure DCS Cabinets
				Admin Building DCS Cabinets
				Cooling Tower RIO Cabinet

APPENDIX A

OVERALL COMMUNICATION DIAGRAM

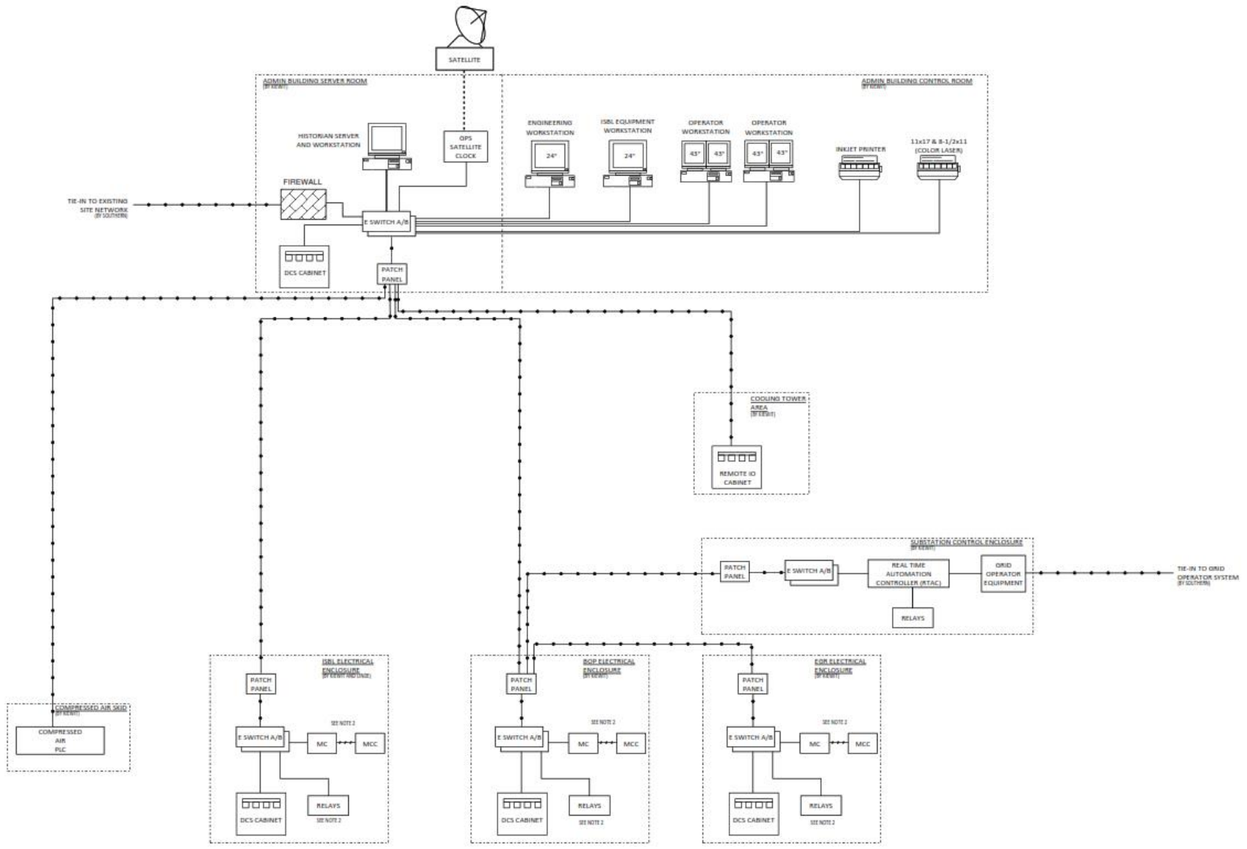

NOTES:

1. THIS DIAGRAM IS REPRESENTATIVE OF EQUIPMENT CONTAINED WITHIN ENCLOSURES. MULTIPLE DCS CABINETS, RELAYS, ETC. MAY BE PRESENT WHERE INDICATED ON THE DIAGRAM.
2. ALL EQUIPMENT SHOWN IS PROVIDED BY KIEWIT WITH THE EXCEPTION OF MCCS, RELAYS, AND MEDIA CONVERTERS IN THE ISBL ELECTRICAL ENCLOSURE. EXCLUDED EQUIPMENT IN THE ISBL ELECTRICAL ENCLOSURE WILL BE PROVIDED BY LINDE.

LEGEND:

- REDUNDANT MULTIMODE FIBER OPTIC CABLE
- UTP CATEGORY 5E CABLE
- SERIAL CABLE

ACRONYMS:

DCS	DISTRIBUTED CONTROL SYSTEM
MC	MEDIA CONVERTER
MCC	MOTOR CONTROL CENTER
PLC	PROGRAMMABLE LODIC CONTROLLER
OSBL	OUTSIDE BATTERY LIMIT
ISBL	INSIDE BATTERY LIMIT
EGR	EXHAUST GAS RECIRCULATION

- PRELIMINARY -
NOT FOR CONSTRUCTION

REV	DESIGN BY	CHECKED BY	DATE
0	ISSUED FOR FEED N. MECHLER	Z. RABEI	OPEN

GE/SOUTHERN/LINDE

GE/SOUTHERN/LINDE ADVANCED NGCC INTEGRATION

Kiewit

INSTRUMENTATION AND CONTROLS DIAGRAM
OVERALL COMMUNICATIONS DIAGRAM

ENGINEER/DESIGN ORDINATOR	N. MECHLER
LEAD ENG	N. MECHLER
ENG MGR	B. LOFGREEN
PROJ MGR	B. LOFGREEN

DRAWING NUMBER: 20041223-IC-001

APPENDIX C

DCS GRAPHIC STANDARD

APPENDIX B

DCS GRAPHICS STANDARD

1. DCS DISPLAY COLOR STANDARDS:

1.1 Display Backgrounds Colors: Screen backgrounds are to be GRAY (R = G = B = 200).

1.2 Standard Options: Seller shall provide complete graphics configuration for all operator interface functions for plant operation. This includes interface to all functionalities controlled by the DCS as well as summary displays (for example, turbine monitor screens) for items monitored by the DCS. Engineer will provide a guidance document for screen configuration (i.e., colors, symbols, weights, etc.) as well as guidance on the specific coverage screens to the Seller after award. Seller shall submit draft and final screen displays to Engineer for review in accordance with the Seller's Deliverable Schedule (SDS).

All Points displayed on a graphic are to get information from the configuration parameters (don't use static text). The location of these parameters is to be determined.

A standard set of faceplates shall be developed representing each type of control defined by the templates and required by the modulating control loops. Each standard faceplate is to be populated with the information from the current point selected. The operator selection of the equipment shall call the appropriate standard faceplate and populate the faceplate with the appropriate information for that equipment. Individual faceplates for each popup shall not be provided.

1.3 Point Attribute Colors

Analog Controller Point



Control box Values showing:
PV (Process Value) fields are to be YELLOW on a BLACK background.
SP (Set Point) fields are to be WHITE on a BLACK background.
Output fields are to be CYAN on a BLACK background.
Mode fields are to be GREEN on a BLACK background.
Eng. Unit fields are to be LIGHT PURPLE on a BLACK background.
PV, SP and Output fields will Alarm RED when the point is in Alarm or Error.

All control point fields will be enclosed in a raised box (This is when space becomes an issue where the above Control Point cannot be displayed).

Non-control, indication only, points will not be included in the raised box frame.

1.3 Point Attribute Colors (cont.)

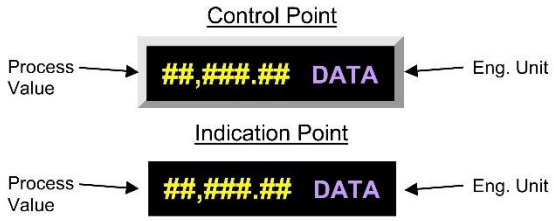

1.4 Control Valve Colors

SYMBOL	DESCRIPTION
	Control Valve: DCS. Top half filled in MAGENTA with outline BLACK and BLACK "T" in center.
	Control Valve: Top and bottom filled in CYAN with a BLACK outline.
	Control Valve Tracking (permits to modulate not met, override signal present): Bottom half filled in CYAN with BLACK outline. Top half filled in BLACK with outline and diagonal bar YELLOW.
	Control Valve w/ 2 Limit Switches. Closed Limit Switch: Bottom half GREEN with BLACK outline. Open Limit Switch: Bottom half RED with BLACK outline. Neither Limit Switch Made: Bottom half CYAN with BLACK outline.
	Valve Fault: Positioned over valve to indicate fault, while still allowing view of the valve position status. Per DI ALARM described in section 1.9.1.

1.5 ON/OFF Pneumatic Valve Colors

SYMBOL	DESCRIPTION
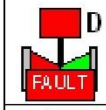	Valve Symbol: Showing the mode. The value of the data field (D) shall be as follows: A = Auto, M = Manual.
	Actuator: DCS Tagout. Box filled in MAGENTA with outline BLACK and BLACK "T" in center.
	Actuator: Actuator output open command. Box filled in RED with outline BLACK.
	Actuator: Actuator output close command. Box filled in GREEN with outline BLACK.
	Actuator: Permits to actuate not met, or override signal present. Box filled in GREEN or RED (depending upon direction forced) with outline and diagonal bar YELLOW.
	Valve Open/On: Filled in RED with outline BLACK.
	Valve Closed/Off: Filled in GREEN with outline BLACK.
	Valve Travel: Flashing same color as output command (GREEN or RED), alternating with WHITE.
	Valve Fault: Positioned over valve to indicate fault, while still allowing view of the valve position status. Per DI ALARM described in section 1.9.1.

1.6 Pump/Motor Colors

SYMBOL	DESCRIPTION
	Pump Symbol: DCS. Center of pump filled in MAGENTA with outline BLACK and BLACK "T" in center. The value of the data field (D) shall be as follows: A = Auto, M = Manual, S = Standby.
	Pump Symbol Running: Center of pump filled in RED with outline BLACK. The value of the data field (D) shall be as follows: A = Auto, M = Manual, S = Standby.
	Pump Symbol Stopped: Center of pump filled in GREEN with outline BLACK. The value of the data field (D) shall be as follows: A = Auto, M = Manual, S = Standby.
	Pump Symbol Not Permitted (permits to run not met, override signal present): Center of pump filled in GREEN with outline and diagonal bar YELLOW. The value of the data field (D) shall be as follows: A = Auto, M = Manual, S = Standby.
	Pump Fault: Positioned over pump to indicate fault, while still allowing view of the pump status. Per DI ALARM described in section 1.9.1.

1.7 MOV Colors

SYMBOL	DESCRIPTION
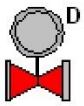	MOV Symbol - Valve Open/On: Bottom half filled in RED with outline BLACK, top half GRAY with outline BLACK. The value of the data field (D) shall be as follows: A = Auto, M = Manual.
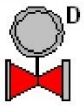	MOV Symbol - Valve Opening (based on pulsed output command to motor): Bottom half flashing RED (alternating with WHITE) with outline BLACK, top half GRAY with outline BLACK. The value of the data field (D) shall be as follows: A = Auto, M = Manual.
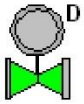	MOV Symbol - Valve Closing (based on pulsed output command to motor): Bottom half flashing GREEN (alternating with WHITE) with outline BLACK, top half GRAY with outline BLACK. The value of the data field (D) shall be as follows: A = Auto, M = Manual.
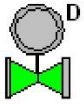	MOV Symbol - Valve Closed/Off: Bottom half filled in GREEN with outline BLACK, top half GRAY with outline BLACK. The value of the data field (D) shall be as follows: A = Auto, M = Manual.
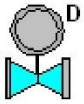	MOV Symbol - Valve Stopped (based on pulsed output command to motor): Bottom half filled in CYAN with outline BLACK, top half GRAY with outline BLACK. The value of the data field (D) shall be as follows: A = Auto, M = Manual.

1.8 Process Piping/Tank Level Colors

Process	Foreground/ Background	Graphic
HP Steam	45deg GRAY Dash RED	
HRH Steam	45deg GRAY Dash BRIGHT PINK	
IP Steam	45deg GRAY Dash ORANGE	
CRH Steam	45deg GRAY Dash TAN	
LP Steam	45deg GRAY Dash TEAL	
Natural Gas	45deg BLACK Dash YELLOW	
Instrument Air	45deg GRAY Dash LIGHT BLUE	
CO2/Hydrogen	45deg GRAY Dash BURGUNDY	
Chemical Vapor	45deg GRAY Dash WHITE	
Demin/Condensate	BLUE	
Feed Water	NAVY BLUE	
Fire Water	RED	
Circ Water	TEAL	
Waste Water	BROWN	
Oil	ORANGE	

Process	Foreground/ Background	Graphic
Chemical	VIOLET	
Potable/Raw	LIGHT TURQUOISE	
Closed Cooling	LIGHT GREEN	

1.9 Text and Static Symbol Color:

Equipment & Tank Titles:
Text Color to be BLACK.
Font: Arial
Font Style: Bold
Text Size: 8

Links to other graphics:
Text Color to be WHITE.
Font: Arial
Font Style: Bold
Text Size: 8

Static Symbol Color:
Dark GRAY with BLACK Outline

Display Names:
Text Color to be BLACK.
Background Color to be determined by area.
Font: Arial
Font Style: Bold
Text Size: 16

1.9.1 DI Alarm Symbol: The symbol appears only when an alarm condition is active (TRUE) and incorporates the DI's alarm word per the configuration parameters. As a general rule, the PV alarm word text that is referenced into the DI Alarm Symbol box should be "FAULT", as shown below. However, the text to be displayed should always be referenced from the PV alarm word, so that this text can easily be changed in one location for all instances of a device's alarm message. The alarm symbol should NOT utilize static text. The PV alarm word will show up WHITE on a RED box with a WHITE outline.

FAULT

For some DI signals assigned on equipment status we normally did a table to avoid excessive or complex graphics, review the contract to get the quantity for this signals.

Estado	Etiqueta	Descripción
	XL_0001	Falla Común en UPS-DL-01
	XL_0002	Mínima Carga en UPS-DL-01
	XL_0003	Máxima Carga en UPS-DL-01
	XL_0004	Carga Rápida (Boost charger) en UPS-DL-01
	XL_0005	Inversor en Operación en UPS-DL-01
	XL_0006	Línea Normal en Operación en UPS-DL-01
	XL_0007	Falla de Rectificador en UPS-DL-01
	XL_0008	Bajo Voltaje de Baterías en UPS-DL-01
	XL_0009	Interruptor Estático Bloqueado en UPS-DL-01
	XL_0010	Falla de Ventilador en UPS-DL-01
	XL_0011	Falla de Alimentación al Rectificador en UPS-DL-01

[J1]

2. DISPLAY MANAGEMENT/NAVIGATION: The displays will be set up in such away to make use of overview displays. There will be one Main Overview display for the entire plant area controlled by the console in question. Area Overview displays are to be located under the Main Overview display. Finally the Control Displays will be located under the appropriate Area Overview displays.

The Main Overview display will have Quick Access Fields to all of the Area Overview displays. Each Area Overview display will have Quick Access Fields to the Main Overview display, all of the Area Overview displays and all of the Control Displays for that area. Each of the Control Displays will have Quick Access Fields to the Main Overview display, its area Overview Display and all of the Control Displays for its area. The arrows shown on the example below are provided to illustrate these navigation capabilities between displays by pressing the forward or reverse button on the Quick Access Field.

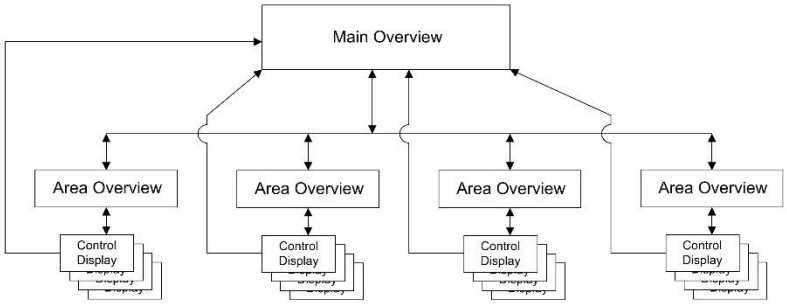

The Main Overview will be created to give an overview of the entire area of the plant controlled from the console. This display will not contain any control functionality.

The Area Overviews will be created to give an overview of a specific area of the plant. These displays will contain a minimal number of control points. These areas will include Combustion Turbines (one overview for each of CT1, CT2, CT3, and CT4), Water Treatment (WT), Electrical (ELECT), and Cooling Tower (CTWR).

The Control Displays will be created to give the operator complete functional control of the process controlled at the console.

The Quick Access Fields will look similar to button format below. These buttons will be located in the top right hand corner of the display area.



3. CONTROL STYLE FOR POINTS: All Instrument Areas will initially pop-up in the upper right hand corner of the display. The functionality of the faceplates is determined by the version of software. The Options will be further refined as the configuration and Operator Console programming are complete. The examples shown below are intended as a guide.

3.1 General Functionality: The Instrument Face Plate has the following functionality:

a. Point Alarm acknowledgement
b. Tagout capability
c. Permissive / Interlock pop-up capability

3.2 Loop Instrument Area: The Loop Instrument Area can be selected by either selecting a point on the display or the Instrument Area icon located on the top Menu bar. The Loop Instrument Area will initially pop-up on the right hand side of the display area and will take up 1/6 or smaller of the display.

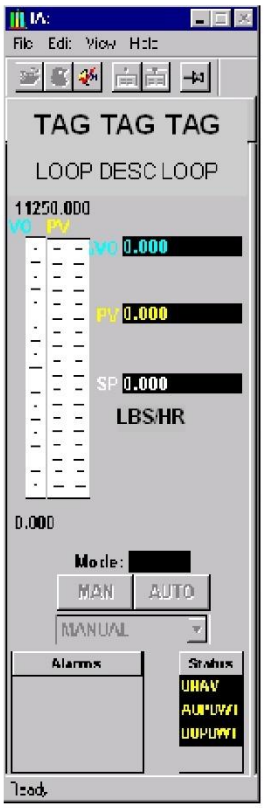

a. Tag Name: Same as P&ID
b. Description: Per Kiewit Database
c. Lockout: Tagout Option
d. Alarm Status: Shows alarms status of point.
e. Alarms Acknowledge: Available from faceplate
f. Status: Tracking Indication (Force on Valve)
g. Other: Link to Permissive Display (if available)
h. Only one Instrument Area may be called up at a time. If a new point is selected while an Instrument Area is opened the Instrument Area will change its focus to the new point

3.3 Motor Instrument Area: The Motor Instrument Area can be selected by either selecting a point on the display or the Instrument Area icon located on the top Menu bar. The Motor Instrument Area will initially pop-up on the right hand side of the display area and will take up 1/6 or smaller of the display.



a. Tag Name: Same as P&ID
b. Description: Per Kiewit Database
c. Lockout: Tagout Option
d. Alarm Status: Shows alarms status of point (TROUBLE, READY, TRIPPED, FAULT)
e. Other: Override Indication (Force on Motor)

- Note: Faceplates for 4160V motors shall display the word "TROUBLE" in the location shown above. Faceplates for 480V motors shall display the word "READY"

A similar faceplate should be developed for motor operated valves, and another for pneumatic valves, with the capability to show all indicated alarms and statuses, auto/manual selection, and start (open)/stop (close) where appropriate.

3.4 Analog Output Instrument Area: The Analog Output (AO) Instrument Area can be selected by either selecting a point on the display or the Instrument Area icon located on the top Menu bar. The AO Instrument Area will initially pop-up on the right hand side of the display area and will take up 1/6 or smaller of the display.



a. The AO Instrument area is not locked to the right hand side of the display but can be move anywhere on the display and locked if desired

APPENDIX C

HISTORICAL DATA REPORT FORMAT

Time	1A-PIT-020001 Unit A HP Steam Pressure PSIG	1A-TE-020002 Unit A HP Steam Temperature Deg F	1A-FIT-020003 Unit A HP Steam Flow KPPH
1/1/2012 0:00.00	1600	1050	411
1/1/2012 0:00.01	1601	1051	412
1/1/2012 0:00.02	1600	1050	412
1/1/2012 0:00.03	1602	1052	411
1/1/2012 0:00.04	1600	1051	413
1/1/2012 0:00.05	1600	1051	411
1/1/2012 0:00.06	1602	1050	411
1/1/2012 0:00.07	1601	1050	413
1/1/2012 0:00.08	1602	1050	413
1/1/2012 0:00.09	1600	1052	412
1/1/2012 0:00.10	1602	1052	412
1/1/2012 0:00.11	1601	1051	412
1/1/2012 0:00.12	1602	1051	412
1/1/2012 0:00.13	1600	1052	413
1/1/2012 0:00.14	1601	1050	411
1/1/2012 0:00.15	1602	1050	413
1/1/2012 0:00.16	1601	1051	411
1/1/2012 0:00.17	1602	1052	411
1/1/2012 0:00.18	1600	1050	413
1/1/2012 0:00.19	1600	1052	413
1/1/2012 0:00.20	1600	1050	412
1/1/2012 0:00.21	1602	1051	412
1/1/2012 0:00.22	1601	1052	412
1/1/2012 0:00.23	1602	1050	412
1/1/2012 0:00.24	1600	1050	411
1/1/2012 0:00.25	1601	1050	413
1/1/2012 0:00.26	1601	1052	413
1/1/2012 0:00.27	1602	1051	412
1/1/2012 0:00.28	1600	1051	411
1/1/2012 0:00.29	1601	1050	411
1/1/2012 0:00.30	1600	1050	412

Appendix KK

OSBL Main Power Transformer Specification

Kiewit

SPECIFICATIONS FOR
MAIN POWER TRANSFORMER

94.03.20.100

GE / SOUTHERN / LINDE ADVANCED NGCC

KIEWIT PROJECT NO. 20041223

ISSUED: APRIL 28, 2023

REVISION 0 – ISSUED FOR FEED

TECHNICAL SPECIFICATIONS

TABLE OF CONTENTS

TITLE		Pages	Revision
1B	Section 1B	1B-1 – 1B-5	0
1E	Main Power Transformer Specification	1E-1 – 1E-4	0
TECHNICAL REQUIREMENTS			
APPENDIX A	Transformer Factory Testing Procedure	8 pages	0
APPENDIX B	Overall One-Line	1 page	0
GENERAL REQUIREMENTS			
E1	Motors-Induction Squirrel Cage Type	E1-1 – E1-20	
E2	Seller Furnished Controls and Wiring	E2-1 – E2-12	
I2	General Instrumentation Requirements	I2-1 – I2-12	
I3	Cybersecurity Requirements	I3-1 – I3-12	
	Cyber Assets Log	3 pages	
	White Listed Ports and Services Log	1 page	
	Technical Feasibility Exception (TFE) Template	4 pages	
M1	General Mechanical Requirements	M1-1 – M1-20	
S1	Structural Loading and Design	S1-1 – S1-10	

ESTIMATING SECTION 1B

1. SITE DESIGN CONDITIONS: The Site conditions to be used as design and performance criteria are as follows:

   - Main Plant Finish Grade Elevation (Mean Sea Level) : 23 feet
   - Barometric pressure: 14.7 psia
   - High Ambient Temperature: 105 ° F
   - Low Ambient Temperature: 0 ° F
   - Temperature; Indoor Ambient (Dry Bulb)
     Occupied areas (Air Conditioned) 65 ° F to 75 ° F
     Non-occupied areas (Ventilated and Heated only) 40 ° F to 100 ° F

2. UTILITIES FOR COOLED EQUIPMENT:

   - Instrument Air Pressure Range: 60 – 120 psig
   - Design temperature for air cooled equipment: 105 ° F
   - Design cooling water inlet temperature for water-cooled equipment: 86 ° F
   - Cooling Water Composition 0% propylene glycol/100% water
   - Cooling Water Design Pressure 150 psig
   - Cooling Water Pressure Drop/Temperature Rise (NTE): 10psi /20 ° F

3. STRUCTURAL:

   - Precipitation: Average rainfall: 64 inches/year
   - Design 24 hour Storm Event 25 year / 100 year: 10.3 inches / 14.0 inches
   - Design Snow Loading: 0 psf ground / 0 psf roof (ASCE 7-16)
   - Minimum Design Basic Wind Speed: 153 mph (ASCE 7-16 – Risk Category III)
   - Design Wind Load and importance factor: I_w=1.00 (ASCE 7-16)
   - Exposure: C

ESTIMATING SECTION 1B

- Seismic Loading: Seismic Importance Factor I=1.25
  Occupancy / Risk Category III
  Site Class D
  Spectral Response Accelerations S_S=0.095 g, S_1=0.059 g
  Site coefficients F_a=1.6 and F_v=2.4
  Spectral Response Coefficients S_{DS}=0.109 g, S_{D1}=0.102 g
  Seismic Design Category B
  ATC Hazards by Location (ASCE 7-16)
- Winter Design: Freeze Protection is required; Frost depth = 12”
- Design life of the Facility: 30 years

4. NOISE CONTROL:

   Near Field: The A-weighted sound pressure level resulting from the operation of equipment furnished under these specifications (including drive motors) shall not exceed a free-field average (per piece of equipment) of 85 dBA along the equipment envelope at a height of 5 feet (1.5 meters) above the ground and personnel platforms. The equipment envelope is the perimeter line that completely encompasses the equipment package (including noise control devices) at a distance of 3 feet (1 meter) from the equipment face.

   Far Field: The A-weighted sound pressure level (dBA) at 400 ft from the emission source should be provided for EPC to evaluate the overall plant noise level at the plant boundary.

5. SITE ACCESS:

   The jobsite is located at Plant Barry in Bucks, Alabama. The jobsite can be accessed from the following:

   Road: The site is accessible from Highway 43

   Rail: No site rail access.

   Barge: Barge can be transported via the Mobile River through the Mobile Bay.

6. ADDITIONAL SITE CONSIDERATIONS:

7. GENERAL DESIGN REQUIREMENTS:
   a. Asbestos-containing materials will not be allowed.

ESTIMATING SECTION 1B

b. Only proven and tested technology fo the same model or nominal size and design conditions and in successful operation for at least five years in the exact same application shall be provided. There shall be no exception to this clause.

c. For projects located in Canada, CRN certification and local province requirements shall be incorporated into the equipment and pressure piping system design.

d. Mandatory Construction and Commissioning: One complete set of parts indicated in the Seller's documentation requiring to be replaced during the Construction, Testing or Startup phases of the Project (Mandatory Construction and Commissioning Parts) shall be included in the Seller's scope. For example, manway gaskets, hydro kit gaskets, or other that are routinely replaced after inspections and tests.

e. Pump Designs:Shut-off head at design speed shall be between 115 and 140% of the maximum total dynamic head (excluding circulating water pumps).

f. All rotating components and assemblies shall be dynamically balanced in accordance with Table 1 of ISO 1940.

g. Piping Design:
   i. Unless otherwise indicated in this specification, the minimum carbon steel piping schedule for NPS 2-1/2" and larger is STD, for 2" and smaller is Schedule 80.
   ii. Unless otherwise indicated in this specification, the minimum stainless steel piping schedule for NPS 2-1/2" and larger is 10S, for 2" and smaller is Schedule 40S.
   iii. Minimum allowable resultant force at each equipment nozzle shall be 250 lbs per nominal pipe size (NPS), and the minimum allowable resultant moment at each equipment nozzle shall be 500 ft-lbs per NPS. For instance, a 4 inch nozzle shall be designed for minimum 1,000 lbs resultant force and 2,000 ft-lbs resultant moment.
   iv. For skidded and Seller provided piping, high point vents and low point drains shall be provided. Vents and drains shall normally be isolated with globe valves and gate valves respectively, in liquid service. Ball valves shall be provided for vents & drains in natural gas and air services.
   v. Corrosion Allowance: Pipe wall thickness shall be calculated using the following corrosion allowances:
      - Carbon & Low/Intermediate Alloy Steels: 0.020"
      - Creep Strength Enhanced Ferritic (CSEF) Steels – 0.060"
      - Stainless Steel and Nickel Alloys : 0.000"
   vi. Steel flanges 2-1/2 inch and larger except for grooved pipe shall be weld neck, slip-on type is permitted for class 150 only, and all steel flanges 2 inch and smaller shall be of the socket type.
   vii. Fittings for tubing shall be flareless compression type, Swagelok or Parker Type 316 stainless steel.

ESTIMATING SECTION 1B

viii. All vent and drain islolation valves and instrument root valves rated ASME Class 900 or greater shall utilize double block root valves.
ix. Valve Actuators: Gear actuators shall be used on all valve sizes greater than 6 inch, and on any valve requiring more than 75 pounds rim pull to operate the valve at the maximum differential pressure.
x. All valve bonnets for valves with design temperatures of 150F or higher shall be provided with bonnet over pressure protection.

h. Approved Vendors:
i. Steel body gate, globe, angle, and check valves shall be manufactured by Velan, Crane, Pacific Valves, Anderson Greenwood-Crosby, Edward Vogt, SPX Corporation, Fisher Controls International, or Dresser, Inc.
ii. Butterfly valves shall be manufactured by Bray, Crane, Xomox, Ebro, Amri, or Centerline.
iii. Control valves shall be manufacturered by Fisher, Valtek, Leslie, Koso, or CCI.
iv. Coupling shall be of the flexible spacer type by Falk, Zurn, or engineer approved equal.
v. Instruments shall be manufacturered by:
- Transmitters: Rosemount, Foxboro
- Level Gauges: Jerguson
- Pressure Gauges, Temperature Switches: Ashcroft
- Temperature Gauges: Ashcroft EI case style
- Pressure and Differential Pressure Switches: Ashcroft, Merriam, Midwest
- Level Switches: Magnetrol, SOR, Jerguson/Magne-Sonics
- Solenoid Valves: ASCO
- Critical Service Flow Elements:, Triad, Fluidic Technologies, PFS
- Non-Critical Service Flow Elements: Dietrich Standard, Deltabar/Midwest Instruments, Veris
- Heated Instrument Enclosure: O'Brien

i. General Weld Requirements:
- Structural steel welding shall be in accordance with the applicable AWS welding code.
- Welding of fluid-conveying, non-structural steel, piping and pressure-containing materials shall be in accordance with ASME BPVC Section IX.

8. Quality and Examination Requirements:
a. Seller and Seller's sub-suppliers shall have a Quality Management System, approved by the buyer, in accordance with ISO9001. The Seller shall provide transparent supply chain integrity for the material sources.

b. Records in accordance to referenced code shall be maintained and available for submittal to the Buyer upon request. These records include but are not limited to:
i. Material Test Reports (MTR) of base and welding materials
ii. Welding Procedure Specification (WPS) and supporting Procedure Qualification Record (PQR)

ESTIMATING SECTION 1B

iii. Heat Treatment Records
iv. Final Non Destructive Examination (NDE) reports
v. Repair records
vi. Personnel qualification records
vii. Nonconformance reports
viii. Manufacture's Data Reports (MDR)

END OF SECTION

Project: GE/Southern/Linde Advanced NGCC Integration
Kiewit #: 20041223
Revision: 0

SPECIFICATION 94.03.20.100
Main Power Transformer

Item	Description	Specified Data	By Bidder	See Note	Rev. #
	Specification Summary				
	This specification covers the design, fabrication, testing and delivery of Main Power Transformer(s) in accordance with this specification and stated Standards.				
1	**General Requirements**				
1.01	Quantity	One (1)			
1.02	Tag Number	6Z-MPT-XFR-1			
1.03	Cooling Class	ONAN/ONAF/ONAF			
1.04	Temperature Rise	65°C			
1.05	Number of Windings	Two (2)			
1.06	Frequency (Hz)	60			
1.07	Near Field Sound Pressure Level (dbA) at 3 Feet	85			
1.08	Impedance at Base Rating (%)	10.5%			
1.09	Evaluation Basis for losses ($ / kW)	$1,500			
1.10	Efficiency at Top MVA Rating	99.7%			
2	**Windings Requirements**				
2.01	Winding # 1, HV				
2.02	Rated Power per cooling class (MVA)	43/58/72			
2.03	Rated Voltage (kV)	230.0			
2.04	Connection	Delta			
2.05	Line BIL (kV)	900			
2.06	Neutral BIL (kV)	N/A			
2.07	Winding # 2, XV				
2.08	Rated Power (MVA)	See Project One-Line			
2.09	Rated Voltage (kV)	13.8			
2.10	Connection	Wye			
2.11	Line BIL (kV)	110			
2.12	Neutral BIL (kV)	110			
2.13	Buried Delta Winding	NA			
2.14	Vector Group	Low lags high by 30 deg			
2.15	Winding Material	100% copper			
2.16	Maximum Winding Hot Spot Rise Above Ambient (°C)	80			
3	**Insulating Material**				
3.01	Type of Insulating Material - Seller to furnish all required insulating material	Mineral Oil			
3.02	Insulating Material Preservation	conservator			
4	**Tap Changers**				
4.01	Regulated Winding	HV winding			
4.02	Tap Changer Type	On-load			
4.03	Tap Changer Control	Automatic			
4.04	Number of Steps Plus - Increment	16 @ 0.625%			
4.05	Number of Steps Minus - Increment	16 @ 0.625%			
5	**Bushings**				
5.01	High Voltage, HV Rated Line Voltage (kV)	230			
5.02	Bushing Material	Porcelain			
5.03	BIL (kV)	900			
5.04	Minimum Porcelain Creep Distance (Inches)	44mm/kV			
5.05	Termination Compartment	No			
5.06	Termination Type	Cable			
5.07	HO Neutral Bushing BIL (kV)	110			
5.08	Low Voltage, XV Rated Line Voltage (kV)	13.8			
5.09	Bushing Material	Porcelain			
5.10	BIL (kV)	110			
5.11	Minimum Porcelain Creep Distance (Inches)	Manufacturer Standard			
5.12	Termination Compartment	Yes			
5.13	Termination Type	Cable Bus			
5.14	XO Neutral Bushing BIL (kV)	110			
6	**Neutral Grounding Equipment**				
6.01	Connection Point	Low Voltage Winding			
6.02	Method	Resistance			
6.03	Rated Voltage (kV)	8.2			
6.04	Resistor	Yes			
6.05	Amperes	400			
6.06	Ohms	Manufacturer's Standard			
6.07	Time Duration (Seconds)	10 seconds			
6.08	Mounted on Transformer	Mounted on or Adjacent to Transformer			
7	**Additional Items (See RFP for additional Accessories)**				
7.01	**Surge Arresters**				
7.02	Quantity	3			
7.03	Minimum MCOV Rating (kV)	144			

7.04	Mounted on Transformer	Yes	
7.05	Discharge Counters	No	
7.06	**Current Transformers**		
7.07	HV Bushing	Included	
7.08	Ratio	1200:5 MR	
7.09	**Relay** Accuracy Class / Quantity per bushing / total	C-800 / 3 per bushing / 9 total	
7.10	**Meter** Accuracy Class / Quantity per bushing / total	NA	
7.11	HO Bushing	N/A	
7.12	Ratio	N/A	
7.13	Relay Accuracy Class / Quantity per bushing / total	N/A	
7.14	XV Bushing	Included	
7.15	Ratio	3000:5 MR	
7.16	Relay Accuracy Class / Quantity per bushing / total	C-800 / 3 per bushing / 9 total	
7.17	**Protection Devices**		
7.18	Winding Temperature Indicator	Included	
7.19	Oil Temperature Indicator	Included	
7.20	Oil Level Gauge	Included	
7.21	Pressure Gauge and Relief Valve	Included	
7.22	Sudden Pressure Relay	Included	
7.23	Buchholz Relay	Included	
7.24	Gas Monitor (Hydran M2 or Equal)	Included	
7.25	**Technical Service**		
7.26	Three (3) days Technical Supervision at first filling	Included	
7.27	Three (3) days Technical Supervision at Power up	Included	
7.28	**Power Supplies (Provided by others)**		
7.29	Auxiliary Power	480V 3-Phase - Qty 2 with automatic transfer switch provided by Supplier	
7.30	Control DC	125V with loss of DC alarm	
7.31	**Cooling Fans**		
7.32	Quantity	By Seller	
7.33	HP (each)	By Seller	
7.34	**Paint System and Color**		
7.35	Tank and Accessories Color	ANSI 70 Light Gray	
7.36	Painting System	Manufacturer Standard	
7.37	Porcelain Color	Gray	

8	Spare Parts		
8.01	HV Bushing	Option - one spare per each type provided	
8.02	LV Bushing	Option - one spare per each type provided	
8.03	Neutral Bushing	Option - one spare per each type provided	
8.04	Lightning Arrester	Option - one spare per each type provided	
8.05	Fuses	Option - one box of each size of fuses used	
8.06	Radiator fan	Option - one spare per each type provided	
8.07	Full Set of Gaskets	Included - one set per transformer type	
8.08	Enclosure for Noise Level Reduction	N/A	
8.09	Winding Temperature Indicator	N/A	
8.10	Manufacturer Recommended Start-Up Spare Parts	Included	
8.11	Manufacturer Recommended Two-Year Spare Parts	N/A	

9	Required Testing		
9.01	Minimum number of witnessed factory tests per order	Two - Pretanking inspection and Factory Acceptance Test.	
9.02	Expected duration of each acceptance test	Pretanking - 2 days Factory Acceptance Test - 3 days per transformer	
9.03	Manufacturer's Standard Testing	Included	
9.04	**ANSI C57.12.00 and C57.12.90 Factory Test Requirements:**		
9.05	Resistance Measurement Test	Included	
9.06	Polarity and Phase Relation Tests	Included	
9.07	Ratio Tests	Included	
9.08	No-Load and Excitation Current Tests	Included	
9.09	Load Losses and Impedance Voltage Tests	Included	
9.10	Excitation current at rated voltage and frequency on the rated voltage connection and at the extremes	Included	
9.11	Impedance volts and load loss at rated current and frequency at nominal and extreme taps	Included	
9.12	Zero phase sequence test	Included	
9.13	Impulse test	Included	
9.14	Temperature rise test	Included	
9.15	Bushing power factor testing if not included as part of the bushing manufacturer's certified test report	Included	
9.16	Dew point tests at the factory prior to shipment.	Included	
9.17	Sweep frequency response analysis test using Doble M5x00 at the factory when fully assembled and filled with oil	Included	
9.18	Sweep frequency response analysis test using Doble M5x00 using spark plug bushings when the unit is ready for shipping without oil or bushings	Included	
9.19			
9.20	**Field testing (applicable when assembly, oil fill, and testing is in supplier scope)**		
9.21	Dew point tests when the transformer arrives on site and after complete installation	Included	

9.21	Sweep frequency response analysis test using Doble M5x00 using spark plug bushings when the transformer arrives at site and is set on the final pad	**Included**	
9.22	Sweep frequency response analysis test using Doble M5x00 using spark plug bushings when the transformer is assembled with normal in service bushing and filled with oil	**Included**	
9.23	Insulation tests on all auxiliary devices and wiring (megger)	**Included**	
9.24	Transformer turns ratio	**Included**	
9.25	Power factor - 10kV or LV Cap Bridge	**Included**	
9.26	Core Megger	**Included**	
9.27	Insulation resistance	**Included**	
9.28	CT Ratio, polarity, and saturation	**Included**	
9.29	On-load tap changer operation (if required)	**Included**	
9.30	LTC and motor drive operation (if required)	**Included**	
9.31	Check operation of alarm, interlock, trip circuits, and all ancillary equipment including bushing monitor, gas monitor, etc.	**Included**	
9.32	Detailed test reports required	**Included**	
10	**Codes and Standards**		
10.01	Follow All the Latest Applicable Standards and Codes Including but Not Limited To		
10.02	American National Standards Institute (ANSI)		
10.03	American Society of Testing and Materials (ASTM)		
10.04	ASTM D3487-88		
10.05	Canadian Electrical Code (CEC)	**N/A**	
10.06	Canadian Standards Association (CSA)	**N/A**	
10.07	Institute of Electrical and Electronic Engineers (IEEE)		
10.08	IEEE C37.23		
10.09	IEEE C57.12.00		
10.10	IEEE C57.12.10		
10.11	IEEE C57.12.70		
10.12	IEEE C57.12.90		
10.13	IEEE C57.13		
10.14	IEEE C57.13.2		
10.15	IEEE C57.19.00		
10.16	IEEE C57.19.01		
10.17	IEEE C57.91		
10.18	IEEE C57.016		
10.19	IEEE C57.109		
10.20	IEEE C57.116		
10.21	IEEE C57.121		
10.22	IEEE C62.11		
10.23	National Electric Code (NEC)		
10.24	National Electric Safety Code (NESC)		
10.25	National Electrical Manufacturers Association (NEMA)		
10.26	NEMA ICS1		
10.27	NEMA ICS2		
10.28	National Fire Protection Association (NFPA)		
10.29	Underwriters Laboratories (UL)		
10.30	Other		
11	**Required Production Documentation (not limited to the list below)**	Weeks after NTP (unless noted otherwise)	
11.01	O&M Manuals - Standard 3-ring binder	4 weeks after delivery	
11.02	# of Proof copies required - 4	N/A	
11.03	# of Final copies required - 8	N/A	
11.04	# of CD's required - 8	N/A	
11.05	Special O&M Manual requirements - None	N/A	
11.06	Outline/General arrangement showing the following: - Not to exceed loads and dimensions to begin foundation design - Locations of major equipment - Not to exceed oil volume - Dimensional data for bushing, lightning arresters, bus duct connections, tank and conservator, radiator, gauges, and other accessories - HV and LV connection details - Estimated center of gravity - Shipping and assembled weights and dimensions, oil quantities, and bill of materials	6	
11.07	Outline/General Arrangement Drawing Containing the Following Information as a Minimum: - Final overall dimensions - Final oil volume	10	
11.08	Electrical drawings needed to complete power and control interface wiring	6	
11.09	Design data and transformer performance curves including: - Overexcitation capability - MVA capability vs. average ambient temperature - I2t damage curves - Short circuit capability calculations	6	
11.10	Transformer nameplate drawing	6	
12	**Typical Payment Milestones**		
12.01	Upon proof of purchase by redacted purchase order of long lead material	5%	
12.02	Upon submittal of approved or approved as noted engineering deliverables	10%	
12.03	Upon proof of completion of the core and coil assembly (pictures or signed ins	25%	
12.04	Upon proof of completion of successful witnessed factory acceptance tests	10%	
12.05	Upon complete delivery and acceptance of transformers and loose shipped equipment to project site	45%	
12.06	Upon Contractor approval of final O&M manuals and all outstanding engineering deliverables	5%	
13	**Expected Delivery**	No later than 12 months after award	

14	**Data to be supplied by Manufacturer**	
14.01	**Guaranteed Losses**	
14.02	No Load Losses (kW) at Unity Power Factor	
14.03	Load Losses at Base MVA (kW) at Unity Power Factor	
14.04	Total Losses at Base MVA (kW) at Unity Power Factor	
14.05	Impedance at Base MVA (%)	
14.06	X/R Ratio	
14.07	Zero Phase Sequence Impedance (%)	

15	Other Information		
15.01	Overall Dimensions (Length x Width x Height)	By Vendor	
15.02	Shipping Weight (Lbs)	By Vendor	
15.03	Total Installed Weight including Oil (Lbs)	By Vendor	
15.04	Total Insulating Liquid quantity (US Gal)	By Vendor	
15.05	Shipped Oil Filled (Yes or No)	By Vendor	
15.06	Option for Oil Fill, Process, and Dress Out	PRICE AS SEPARATE BID ITEM	

	Additional Comments	

APPENDIX A

TRANSFORMER FACTORY TESTING PROCEDURE

Table 1 - Core

1.1 Steel Laminations	***Design***	***Tender/Guar.***
Supplier		
Type/Grade of Laminations		
Lamination Thickness (mm)		
Type of Insulation and Thickness (mm)		

1.2 Core Design		
Number of Core Legs		
Number of Legs with Windings		
Cross-sectional Area (cm^2)		
Circle Diameter (mm)		
Window Dimensions (mm x mm)		
Flux Density @ Rated Voltage (T)		
Sound Level @ 1.0 pu Voltage		
Sound Level @ 1.1 pu Voltage		
Hottest Spot Temperature Rise (°C) @ 1.0 pu Voltage		
Hottest Spot Temperature Rise (°C) @ 1.1 pu Voltage		
Mass (kg)		

1.3 Core Construction		
Method of Manf and Ass'y		
Method of Banding and Clamping		
Core Bolts in Leg (if applicable)		
Core Bolts in Yoke (if applicable)		
Core Joint Type		
Number of Step Laps		
Maximum Steel Width (mm)		
Minimum Steel Width (mm)		
Number of Cooling Ducts		

Notes:

Table 1a - Leakage Flux Control

Type/Grade of Laminations		
Lamination Thickness (mm)		
Type		
Location		
Packet Dimensions (mm x mm)		
Flux Density @ ____ MVA		
Method of Manf and Ass'y		
Method of Fastening		
Steel Width (mm)		
Method of Grounding		

Notes:

Table 2 - Winding Details

2.1 Winding Arrangement	***Winding (from the core outward)*** 1	2	3	4
Name				
Type				
Inside Diameter (mm)				
Outside Diameter (mm)				
Height (mm)				
Number of Taps				
Location of Taps				
Location of Static and Ground Shields				
Number of Sections or Layers				
Number of Turns per Section or Layer				
Location of Lead Exits				
Location of Lead Shields or Barriers				

2.2 Winding Details				
Type of Interleaving or Shielding				
Number of Conductors per Turn				
Conductor Arrangement (#Axial x #Radial)				
Type of Conductor (Rect. or CTC)				
Overall Conductor Dimensions Axial x Radial (mm x mm)				
Rect. Conductor or Strand Dimensions				
Conductor Insulation Thickness and Type				
Number of Strands per CTC Conductor				
Strand Insulation Type and Thickness				
Conductor Area (mm^2)				
DC Winding Resistance at 75°C (ohms)				
Number of Winding Joints				
Location of Winding Joints				
Conductor Tensile Strength (psi)				
Mass (kg)				
Number of Spacers per Circle				
Width of Spacers (mm)				
Clamping Pressure per Winding (psi)				
Winding Tube Construction				
Winding Tube Thickness (mm)				

Table 3 - Insulation Design

	Core - 1	1-2	2-3	3-4
Type of Test Defining Major Insulation Under Windings				
Stress Level (kV/mm)				
Maximum Allowable Stress (kV/mm)				
Type of Test Defining Major Insulation Phase to Phase				
Stress Level (kV/mm)				
Maximum Allowable Stress (kV/mm)				
Type of Test Defining Major Insulation Between Windings and Ground				
Stress Level (kV/mm)				
Maximum Allowable Stress (kV/mm)				

Notes:

Table 4 - Loss Calculations and Thermal Design

4.1 Core Loss	***Design***	***Tender/Guar.***
Core Loss at 1.0 pu Voltage (kW)		
Core Loss at 1.1 pu Voltage (kW)		
Excitation Current at 1.0 pu Voltage (%)		
Excitation Current at 1.1 pu Voltage (%)		

4.2 Thermal Design - Windings	***Winding (from the core outward)*** ***1***	***2***	***3***	***4***
Cooling Type				
Number of Directed Flow Collars				
Current Densities (A/mm²)				
Oil Duct Dimension (mm) - Axial				
Oil Duct Dimension (mm) - Vertical				
Oil Velocity for Forced Oil				
Oil Exit Temperature Rises (°C)				
I^2R Losses (kW)				
Axial Eddy Losses (kW)				
Radial Eddy Losses (kW)				
Load Loss at Full Load (kW) (Guarantee)	( )			
Average Winding Temperature Rises at Full Load (°C) (Maximum = ___)				
Average Winding Temperature Rises at Base Rating (°C) (Maximum = ___)				
Winding Hot Spot Temperature Rises at Full Load (°C) (Maximum = ___)				
Winding Hot Spot Temperature Rises at Base Rating (°C) (Maximum = ___)				

4.3 Thermal Design	***Design***	***Tender/Guar.***
Average Oil Rise at Full Load (°C)		
Top Oil Rise at Full Load (°C)		65
Average Oil Rise at Base Rating (°C)		
Top Oil Rise at Base Rating (°C)		65
Tie Plate Rise (°C)		80 or 100
Core Plate Rise (°C)		80 or 100
LV Lead Rise (°C)		80
Clamp Rise (°C)		80 or 100
Tank Rise (°C)		80 or 100
Values of n and m (for IEEE guide)		

Table 5 - Core and Coil Assembly and Processing

5.1 Coil Assembly and Processing

Method of Coil Assembly	
Preclamping Pressure for Coil Dryout	
Coil Dryout Process	
Dryout Acceptance Criteria	
Final Coil Clamping Pressure	

5.2 Core and Coil Processing

Dryout Process	
Dryout Acceptance Criteria	
Method of Clamping	
Final Clamping Pressure per Phase	
Type of Tie Plates or Tie Rods	
Pressure Plate - Material - Thickness (mm)	

6.1 Core

The manufacturer should describe the core manufacture and general assembly and furnish the following information:

- data per Table 1,
- cutting system and burr control,
- core configuration and methods used for clamping core limbs and yokes,
- core insulation and grounding system,
- cooling system,
- voltage versus time curve.

6.1.1 Cores for leakage flux control

Where laminated core steel is used for leakage flux control, the details of the application and assembly of the laminations should be reviewed. The manufacturer should furnish the following information:

- data per Table 1a,
- type and location of flux control,
- insulation and method of grounding.

6.2 Windings

The manufacturer should describe the winding and conductor arrangement, physical location of taps, crossovers, electrostatic shields, conductor arrangement in each coil, spacers, clearances, coil winding and ability to control axial symmetry, clamping structure and winding compression.

The manufacturer should provide the following data:

Winding arrangement

- data in Table 2, item 2.1,
- location of taps, transpositions, crossovers and any static and/or ground shields.

Winding details

- data in Table 2, item 2.2,
- identification of special materials and methods such as high strength conductors, bonded conductors, high strength winding tubes, etc.,
- general description of where winding conductor joints are permitted and quality control procedures to ensure their integrity,
- lead support and assemble,
- description of shields or static rings,
- total weight.

6.3 Insulation design

The manufacturer should provide an insulation layout sketch. Each major region of the insulation structure (i.e. main gap between windings, shielding and/or ground insulation at winding ends, inner winding to core, outer winding to tank, axially along windings, and around all EHV and tap leads) should be identified with the test or operating condition which is most critical to its dimensioning and design. A brief summary of the stresses in the critical regions for each test or operating condition should be reviewed.

Provide a table indicating the required dielectric tests and the worst case stresses imposed on the winding insulation:

- complete data in Table 3.

Demonstrate how the insulation will withstand the imposed stresses, i.e. indicate insulation structure and resultant dielectric strength, for example:

- turn to turn,
- section to section,
- winding to winding,
- winding to ground,
- phase to phase,
- other winding stresses due to:
  - winding nodes,
  - leads,
  - transferred voltages from other windings.

Nodes are coil interconnections and changes in winding construction that cause a change in the series capacitance of the winding.

6.4 Loss calculation and thermal design

The manufacturer should present calculations of losses for core, windings I^2R, axial and radial eddy losses and structural stray losses. Calculation of stray loss heating in core laminations, tie plates, clamps, tank wall, magnetic shielding, etc.

The influence of harmonics on loss computations for special applications such as Static Var Compensators and HVDC transformers should be considered.

Loss computations

- data in Table 4, items 4.1 and 4.2,
- describe measures to control magnetic flux leakage on the clamping structure, tie plates, core, tank wall and around high and low voltage leads.

Thermal design

- data in Table 4, item 4.3,
- cooling controls applied,
- orientation and quantity of radiators, fans, pumps and heat exchangers.

6.5 Core and coil processing

The manufacturer should provide detailed description of all preliminary coil sizing procedures, including the preload (clamping pressure) applied to the windings and the clamping system used. This description should include pressures, temperatures and drying processes, time, dimensional tolerances allowed and the purpose of each step in the winding preparation. Complete the data in Table 5.

6.5.1 Coil drying

- method of dryout,
- temperature of dryout,
- duration of dryout,
- coil clamping.

6.5.2 Core and coil vapour phase processing

- method of processing,
- temperature of process,
- duration of process,
- acceptance criteria.

6.5.3 Coil assembly

- description of coil assembly process after coil dryout,
- description of coil clamping arrangement and means of final clamping. Note any special tools or jigs used,
- final clamping pressure per phase,
- description of tie plates and method of fixing to the core clamps. Explain how losses due to leakage flux are accommodated.

6.6 Technical data

Compare the manufacturer's final transformer design to the tendered design and the applicable specifications. The following list of Technical Data should be compared:

- impedance (positive and zero),

The manufacturer should advise the designed impedance and the expected variation on different tap positions for consideration of parallel operation with other transformers.

- load loss and core loss,
- exciting current,
- sound level,
- regulation,
- weights.

In addition the following data may be needed for utility systems analysis:

- B-H saturation curve, taken to at least 2.3 Tesla,
- maximum inrush current.

7 Seismic

Many countries have regions which experience various degrees of seismic activity. Transformers which are purchased for those regions must withstand the rigors imposed during a seismic event. Generally the seismic activity stresses on the core and coil assembly are much less than the stresses which occur during shipping or system faults. However other structures should be reviewed.

APPENDIX B

OVERALL ONE-LINE

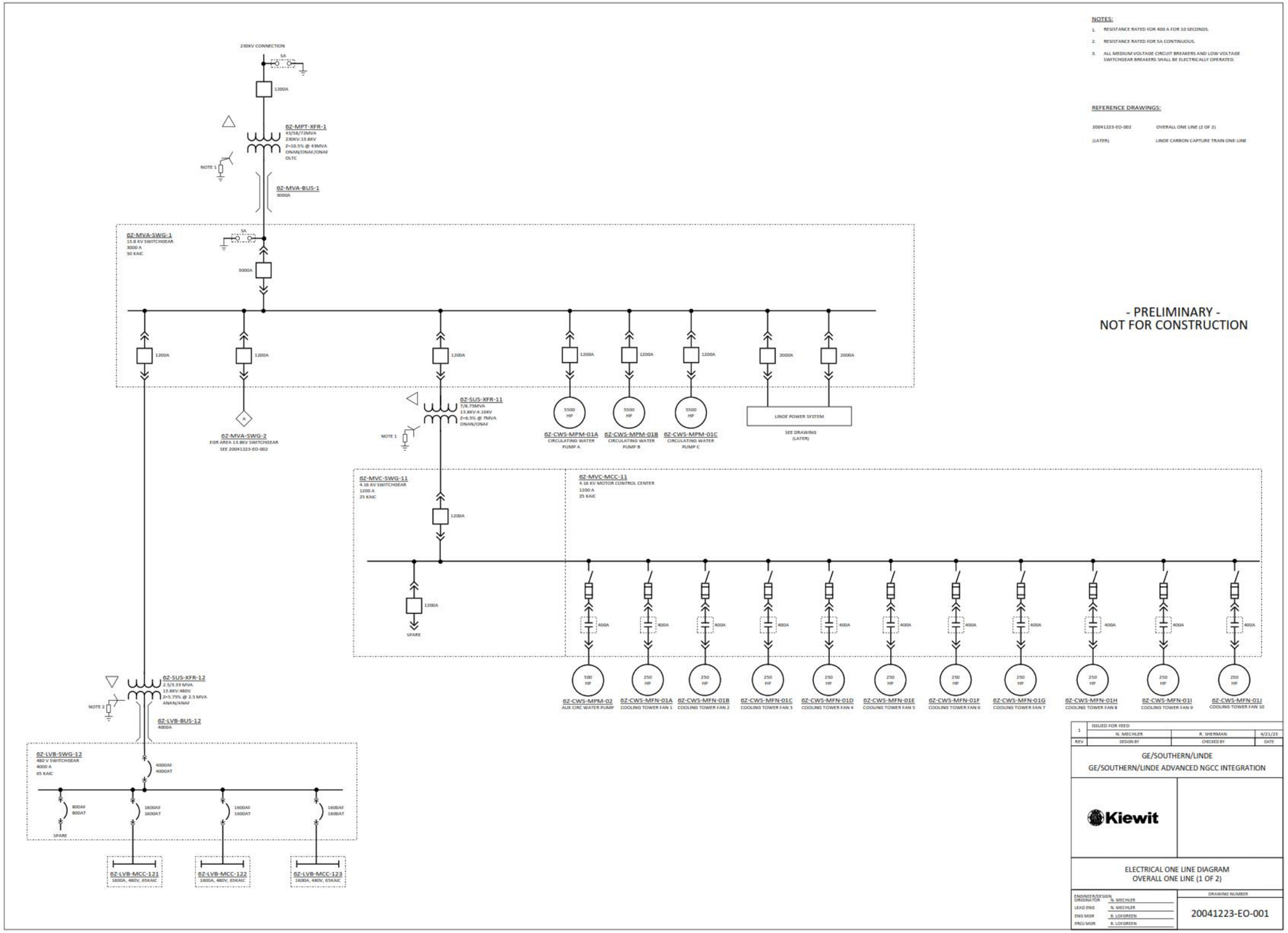
NOTES:
1. RESISTANCE RATED FOR 400 A FOR 10 SECONDS.
2. RESISTANCE RATED FOR 5A CONTINUOUS.
3. ALL MEDIUM VOLTAGE CIRCUIT BREAKERS AND LOW VOLTAGE SWITCHGEAR BREAKERS SHALL BE ELECTRICALLY OPERATED.
REFERENCE DRAWINGS:
20041223-EO-002 OVERALL ONE LINE (2 OF 2)
(LATER) LINDE CARBON CAPTURE TRAIN ONE-LINE
- PRELIMINARY -
NOT FOR CONSTRUCTION
230KV CONNECTION
6Z-MPT-XFR-1
43/58/72MVA
230KV-13.8KV
Z=10.5% @ 43MVA
ONAN/ONAF/ONAF
OLTC
6Z-MVA-BUS-1
3000A
6Z-MVA-SWG-1
13.8 KV SWITCHGEAR
3000 A
50 KAIC
6Z-MVA-SWG-2
EGR AREA 13.8KV SWITCHGEAR
SEE 20041223-EO-002
6Z-SUS-XFR-11
7/8.75MVA
13.8KV-4.16KV
Z=6.5% @ 7MVA
ONAN/ONAF
6Z-CWS-MPM-01A
CIRCULATING WATER PUMP A
6Z-CWS-MPM-01B
CIRCULATING WATER PUMP B
6Z-CWS-MPM-01C
CIRCULATING WATER PUMP C
LINDE POWER SYSTEM
SEE DRAWING (LATER)
6Z-MVC-SWG-11
4.16 KV SWITCHGEAR
1200 A
25 KAIC
6Z-MVC-MCC-11
4.16 KV MOTOR CONTROL CENTER
1200 A
25 KAIC
SPARE
6Z-CWS-MPM-02
AUX CIRC WATER PUMP
6Z-CWS-MFN-01A
COOLING TOWER FAN 1
6Z-CWS-MFN-01B
COOLING TOWER FAN 2
6Z-CWS-MFN-01C
COOLING TOWER FAN 3
6Z-CWS-MFN-01D
COOLING TOWER FAN 4
6Z-CWS-MFN-01E
COOLING TOWER FAN 5
6Z-CWS-MFN-01F
COOLING TOWER FAN 6
6Z-CWS-MFN-01G
COOLING TOWER FAN 7
6Z-CWS-MFN-01H
COOLING TOWER FAN 8
6Z-CWS-MFN-01I
COOLING TOWER FAN 9
6Z-CWS-MFN-01J
COOLING TOWER FAN 10
6Z-SUS-XFR-12
2.5/3.33 MVA
13.8KV-480V
Z=5.75% @ 2.5 MVA
ANAN/ANAF
6Z-LVB-BUS-12
4000A
6Z-LVB-SWG-12
480 V SWITCHGEAR
4000 A
65 KAIC
SPARE
6Z-LVB-MCC-121
1600A, 480V, 65KAIC
6Z-LVB-MCC-122
1600A, 480V, 65KAIC
6Z-LVB-MCC-123
1600A, 480V, 65KAIC
1 ISSUED FOR FEED N. MECHLER K. SHERMAN 4/21/23
REV DESIGN BY CHECKED BY DATE
GE/SOUTHERN/LINDE
GE/SOUTHERN/LINDE ADVANCED NGCC INTEGRATION
Kiewit
ELECTRICAL ONE LINE DIAGRAM
OVERALL ONE LINE (1 OF 2)
ENGINEER/DESIGN ORIGINATOR N. MECHLER
LEAD ENG N. MECHLER
ENG MGR B. LOFGREEN
PROJ MGR B. LOFGREEN
DRAWING NUMBER
20041223-EO-001

NOTES:

1. RESISTANCE RATED FOR 400 A FOR 10 SECONDS.
2. RESISTANCE RATED FOR 5A CONTINUOUS.
3. ALL MEDIUM VOLTAGE CIRCUIT BREAKERS AND LOW VOLTAGE SWITCHGEAR BREAKERS SHALL BE ELECTRICALLY OPERATED.
4. MOTOR SUPPLIED BY GE.

REFERENCE DRAWINGS:

20041223-EO-001	OVERALL ONE LINE (1 OF 2)
(LATER)	UNDE CARBON CAPTURE TRAIN ONE-LINE

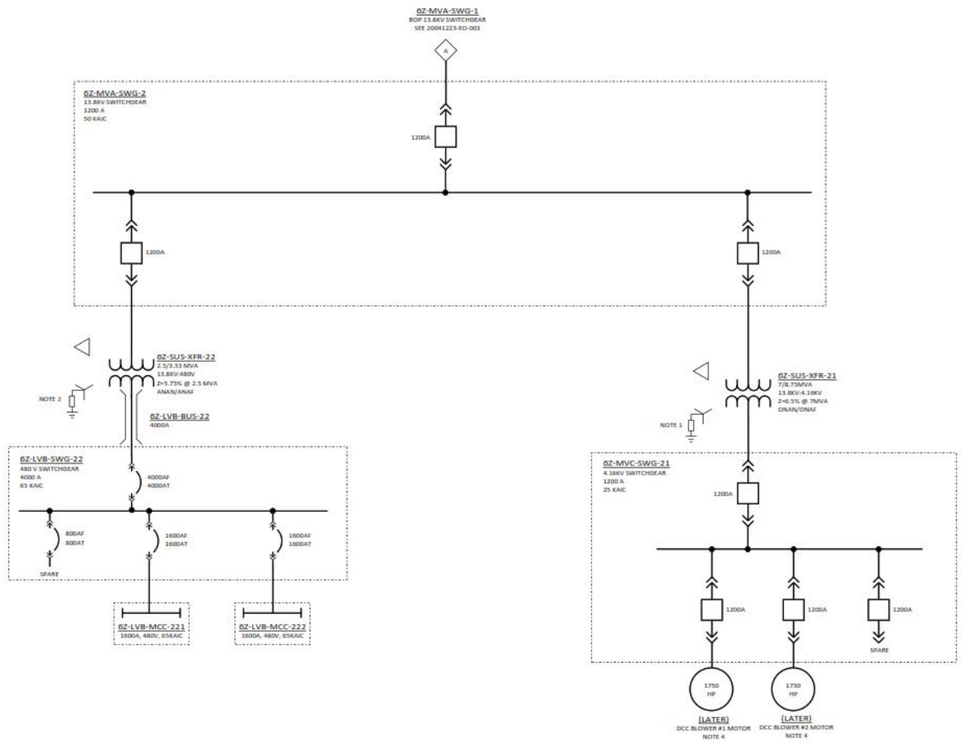

- PRELIMINARY -
NOT FOR CONSTRUCTION

REV	DESIGN BY	CHECKED BY	DATE
1	ISSUED FOR FEED		
	N. MECHLER	R. SHERMAN	4/21/23

GE/SOUTHERN/LINDE
GE/SOUTHERN/LINDE ADVANCED NGCC INTEGRATION

Kiewit

ELECTRICAL ONE LINE DIAGRAM
OVERALL ONE LINE (2 OF 2)

ENGINEER/DESIGN ORGANIZATION	
LEAD ENG	N. MECHLER
ENG MGR	R. LOFGREEN
PROJ MGR	R. LOFGREEN

DRAWING NUMBER
20041223-EO-002

Appendix LL

OSBL Secondary Unit Substation Transformers Specification

Kiewit

SPECIFICATIONS FOR
SECONDARY UNIT SUBSTATION TRANSFORMERS

94.03.20.150

GE / SOUTHERN / LINDE ADVANCED NGCC

KIEWIT PROJECT NO. 20041223

ISSUED: APRIL 28, 2023

REVISION 0 – ISSUED FOR FEED

TECHNICAL SPECIFICATIONS

TABLE OF CONTENTS

TITLE		Pages	Revision
1B	Section 1B	1B-1 – 1B-5	0
1E	Dry-Type SUS Transformer Specification	1E-1 – 1E-2	0
2E	Oil-Filled SUS Transformer Specification	2E-1 – 2E-2	0

TECHNICAL REQUIREMENTS

APPENDIX A
Overall One-Line ..... 1 page 0

GENERAL REQUIREMENTS

E1	Motors-Induction Squirrel Cage Type	E1-1 – E1-20
E2	Seller Furnished Controls and Wiring	E2-1 – E2-12
I2	General Instrumentation Requirements	I2-1 – I2-12
M1	General Mechanical Requirements	M1-1 – M1-20
S1	Structural Loading and Design	S1-1 – S1-10

ESTIMATING SECTION 1B

1. SITE DESIGN CONDITIONS: The Site conditions to be used as design and performance criteria are as follows:

   - Main Plant Finish Grade Elevation (Mean Sea Level) : 23 feet
   - Barometric pressure: 14.7 psia
   - High Ambient Temperature: 105 ° F
   - Low Ambient Temperature: 0 ° F
   - Temperature; Indoor Ambient (Dry Bulb)
     Occupied areas (Air Conditioned) 65 ° F to 75 ° F
     Non-occupied areas (Ventilated and Heated only) 40 ° F to 100 ° F

2. UTILITIES FOR COOLED EQUIPMENT:

   - Instrument Air Pressure Range: 60 – 120 psig
   - Design temperature for air cooled equipment: 105 ° F
   - Design cooling water inlet temperature for water-cooled equipment: 86 ° F
   - Cooling Water Composition 0% propylene glycol/100% water
   - Cooling Water Design Pressure 150 psig
   - Cooling Water Pressure Drop/Temperature Rise (NTE): 10psi /20 ° F

3. STRUCTURAL:

   - Precipitation: Average rainfall: 64 inches/year
   - Design 24 hour Storm Event 25 year / 100 year: 10.3 inches / 14.0 inches
   - Design Snow Loading: 0 psf ground / 0 psf roof (ASCE 7-16)
   - Minimum Design Basic Wind Speed: 153 mph (ASCE 7-16 – Risk Category III)
   - Design Wind Load and importance factor: I_w=1.00 (ASCE 7-16)
   - Exposure: C

ESTIMATING SECTION 1B

- Seismic Loading: Seismic Importance Factor I=1.25
  Occupancy / Risk Category III
  Site Class D
  Spectral Response Accelerations S_S=0.095 g, S_1=0.059 g
  Site coefficients F_a=1.6 and F_v=2.4
  Spectral Response Coefficients S_{DS}=0.109 g, S_{D1}=0.102 g
  Seismic Design Category B
  ATC Hazards by Location (ASCE 7-16)
- Winter Design: Freeze Protection is required; Frost depth = 12”
- Design life of the Facility: 30 years

4. NOISE CONTROL:

   Near Field: The A-weighted sound pressure level resulting from the operation of equipment furnished under these specifications (including drive motors) shall not exceed a free-field average (per piece of equipment) of 85 dBA along the equipment envelope at a height of 5 feet (1.5 meters) above the ground and personnel platforms. The equipment envelope is the perimeter line that completely encompasses the equipment package (including noise control devices) at a distance of 3 feet (1 meter) from the equipment face.

   Far Field: The A-weighted sound pressure level (dBA) at 400 ft from the emission source should be provided for EPC to evaluate the overall plant noise level at the plant boundary.

5. SITE ACCESS:

   The jobsite is located at Plant Barry in Bucks, Alabama. The jobsite can be accessed from the following:

   Road: The site is accessible from Highway 43

   Rail: No site rail access.

   Barge: Barge can be transported via the Mobile River through the Mobile Bay.

6. ADDITIONAL SITE CONSIDERATIONS:

7. GENERAL DESIGN REQUIREMENTS:
   a. Asbestos-containing materials will not be allowed.

ESTIMATING SECTION 1B

b. Only proven and tested technology fo the same model or nominal size and design conditions and in successful operation for at least five years in the exact same application shall be provided. There shall be no exception to this clause.

c. For projects located in Canada, CRN certification and local province requirements shall be incorporated into the equipment and pressure piping system design.

d. Mandatory Construction and Commissioning: One complete set of parts indicated in the Seller's documentation requiring to be replaced during the Construction, Testing or Startup phases of the Project (Mandatory Construction and Commissioning Parts) shall be included in the Seller's scope. For example, manway gaskets, hydro kit gaskets, or other that are routinely replaced after inspections and tests.

e. Pump Designs:Shut-off head at design speed shall be between 115 and 140% of the maximum total dynamic head (excluding circulating water pumps).

f. All rotating components and assemblies shall be dynamically balanced in accordance with Table 1 of ISO 1940.

g. Piping Design:
   i. Unless otherwise indicated in this specification, the minimum carbon steel piping schedule for NPS 2-1/2" and larger is STD, for 2" and smaller is Schedule 80.
   ii. Unless otherwise indicated in this specification, the minimum stainless steel piping schedule for NPS 2-1/2" and larger is 10S, for 2" and smaller is Schedule 40S.
   iii. Minimum allowable resultant force at each equipment nozzle shall be 250 lbs per nominal pipe size (NPS), and the minimum allowable resultant moment at each equipment nozzle shall be 500 ft-lbs per NPS. For instance, a 4 inch nozzle shall be designed for minimum 1,000 lbs resultant force and 2,000 ft-lbs resultant moment.
   iv. For skidded and Seller provided piping, high point vents and low point drains shall be provided. Vents and drains shall normally be isolated with globe valves and gate valves respectively, in liquid service. Ball valves shall be provided for vents & drains in natural gas and air services.
   v. Corrosion Allowance: Pipe wall thickness shall be calculated using the following corrosion allowances:
      - Carbon & Low/Intermediate Alloy Steels: 0.020"
      - Creep Strength Enhanced Ferritic (CSEF) Steels – 0.060"
      - Stainless Steel and Nickel Alloys : 0.000"
   vi. Steel flanges 2-1/2 inch and larger except for grooved pipe shall be weld neck, slip-on type is permitted for class 150 only, and all steel flanges 2 inch and smaller shall be of the socket type.
   vii. Fittings for tubing shall be flareless compression type, Swagelok or Parker Type 316 stainless steel.

ESTIMATING SECTION 1B

viii. All vent and drain islolation valves and instrument root valves rated ASME Class 900 or greater shall utilize double block root valves.
ix. Valve Actuators: Gear actuators shall be used on all valve sizes greater than 6 inch, and on any valve requiring more than 75 pounds rim pull to operate the valve at the maximum differential pressure.
x. All valve bonnets for valves with design temperatures of 150F or higher shall be provided with bonnet over pressure protection.

h. Approved Vendors:
i. Steel body gate, globe, angle, and check valves shall be manufactured by Velan, Crane, Pacific Valves, Anderson Greenwood-Crosby, Edward Vogt, SPX Corporation, Fisher Controls International, or Dresser, Inc.
ii. Butterfly valves shall be manufactured by Bray, Crane, Xomox, Ebro, Amri, or Centerline.
iii. Control valves shall be manufacturered by Fisher, Valtek, Leslie, Koso, or CCI.
iv. Coupling shall be of the flexible spacer type by Falk, Zurn, or engineer approved equal.
v. Instruments shall be manufacturered by:
- Transmitters: Rosemount, Foxboro
- Level Gauges: Jerguson
- Pressure Gauges, Temperature Switches: Ashcroft
- Temperature Gauges: Ashcroft EI case style
- Pressure and Differential Pressure Switches: Ashcroft, Merriam, Midwest
- Level Switches: Magnetrol, SOR, Jerguson/Magne-Sonics
- Solenoid Valves: ASCO
- Critical Service Flow Elements:, Triad, Fluidic Technologies, PFS
- Non-Critical Service Flow Elements: Dietrich Standard, Deltabar/Midwest Instruments, Veris
- Heated Instrument Enclosure: O'Brien

i. General Weld Requirements:
- Structural steel welding shall be in accordance with the applicable AWS welding code.
- Welding of fluid-conveying, non-structural steel, piping and pressure-containing materials shall be in accordance with ASME BPVC Section IX.

8. Quality and Examination Requirements:
a. Seller and Seller's sub-suppliers shall have a Quality Management System, approved by the buyer, in accordance with ISO9001. The Seller shall provide transparent supply chain integrity for the material sources.

b. Records in accordance to referenced code shall be maintained and available for submittal to the Buyer upon request. These records include but are not limited to:
i. Material Test Reports (MTR) of base and welding materials
ii. Welding Procedure Specification (WPS) and supporting Procedure Qualification Record (PQR)

ESTIMATING SECTION 1B

iii. Heat Treatment Records
iv. Final Non Destructive Examination (NDE) reports
v. Repair records
vi. Personnel qualification records
vii. Nonconformance reports
viii. Manufacture's Data Reports (MDR)

END OF SECTION

Project: GE/Southern/Linde Advanced NGCC Integration
KED #: 20041223
Revision: 0

SPECIFICATION 94.03.20.150
Dry Type Station Service Transformer(s)

Item	Description	Specified Data	By Bidder	See Note	Rev. #
	Specification Summary				
	This specification covers the design, fabrication, testing and delivery of Station Service Transformer(s) in accordance with this specification and stated Standards. Site parameters can be found in additional attachments.				
1	**General Requirements**				
1.01	Quantity	Two (2)			
1.02	Tag Number	See One Line			
1.03	Application	Outdoor			
1.04	Cooling Class	ANAN/ANAF			
1.05	Temperature Rise	150°C			
1.06	Number of Windings	2			
1.07	Frequency (Hz)	60			
1.08	Near Field Sound Pressure Level (dbA) at 3 Feet	85			
1.09	Impedance at Base Rating (%)	See One Line			
1.10	Design Type	Vacuum Pressure Impregnated			
1.11	Evaluation Basis for losses ($ / kW)	$1,000			
2	**Windings Requirements**				
2.01	Winding # 1, HV				
2.02	Rated Power per cooling class (kVA)	See One Line			
2.03	Rated Voltage (kV)	13.8			
2.04	Connection	Delta			
2.05	Line BIL (kV)	60			
2.06	Winding # 2, XV				
2.07	Rated Power (kVA)	See One Line			
2.08	Rated Voltage (V)	480			
2.09	Connection	Wye			
2.10	Line BIL (kV)	30			
2.11	Neutral BIL (kV)	30			
2.12	Vector Group	LV Lags HV by 30			
2.13	Winding Material	100% copper			
3	**Tap Changers**				
3.01	Regulated Winding	HV Winding			
3.02	Tap Changer Type	Off-Load			
3.03	Tap Changer Control	Manual Hand Crank			
3.04	Number of Steps Plus - Increment	2 @ 2.5%			
3.05	Number of Steps Minus - Increment	2@2.5%			
4	**Bushings**				
4.01	High Voltage, HV Rated Line Voltage (kV)	13.8			
4.02	Bushing Material	Porcelain			
4.03	BIL (kV)	60			
4.04	Minimum Porcelain Creep Distance (Inches)	Manufacturer's Standard			
4.05	Termination Compartment	Yes			
4.06	Termination Type	Cable			
4.07	HO Neutral Bushing BIL (kV)	NA			
4.08	Low Voltage, XV Rated Line Voltage (kV)	0.48			
4.09	Bushing Material	Porcelain			
4.10	BIL (kV)	30			
4.11	Minimum Porcelain Creep Distance (Inches)	Manufacturer's Standard			
4.12	Termination Compartment	Yes			
4.13	Termination Type	Cable Bus			
4.14	XO Neutral Bushing BIL (kV)	30			
5	**Neutral Grounding Equipment**				
5.01	Connection Point	Low Voltage Winding			
5.02	Method	Resistance			
5.03	Rated Voltage (V)	277.4566474			
5.04	Resistor	Yes			
5.05	Amperes	5			
5.06	Ohms	Manufacturer Standard			
5.07	Time Duration (Seconds)	continuous			
5.08	Mounted on Transformer	No			
6	**Additional Items**				
6.01	**Protection Devices**				
6.02	Winding Temperature Indicator	Included			
6.03	Ground Fault Indicator - Pulse Type	N/A			
6.04	**Technical Service**				
6.05	Three (3) days Technical Supervision at Installatior	N/A			
6.06	Three (3) days Technical Supervision at Power up	N/A			
6.07	**Power Supplies (Provided by others)**				
6.08	Auxiliary Power/Control AC Power	120V 1-Phase			
6.09	**Paint System and Color**				
6.10	Tank and Accessories Color	ANSI 70 Light Gray			
6.11	Painting System	Manufacturer Standard			
6.12	Porcelain Color	Gray			
7	**Spare Parts**				
7.01	Full Set of Gaskets	Included			
7.02	Manufacturer Recommended Start-Up Spare Parts	Included			
7.03	Manufacturer Recommended Two-Year Spare Parts	N/A			
8	**Required Testing**				
8.01	Manufacturer's Standard Testing	Included			

8.02	ANSI C57.12.00 and C57.12.90 Test Requirements:		
8.03	Resistance Measurement Test	**Included**	
8.04	Polarity and Phase Relation Tests	**Included**	
8.05	Ratio Tests	**Included**	
8.06	No-Load and Excitation Current Tests	**Included**	
8.07	Load Losses and Impedance Voltage Tests	**Included**	
8.08	Induced Potential	**Included**	
8.09	Insulation Resistance (megger) Test	**Included**	
8.10	Dielectric Tests	**Included**	
8.11	Temperature Rise Tests	**Included**	
8.12	Short Circuit Tests	**N/A**	
8.13	Audible Sound Emissions Tests	**Included**	
9	**Codes and Standards**		
9.01	Follow All the Latest Applicable Standards and Codes Including but Not Limited To		
9.02	American National Standards Institute (ANSI)		
9.03	American Society of Testing and Materials (ASTM)		
9.04	ASTM D3487-82A		
9.05	ASTM D3487-88		
9.06	ASTM D3487-923		
9.07	Canadian Electrical Code (CEC)	**N/A**	
9.08	Canadian Standards Association (CSA)	**N/A**	
9.09	Institute of Electrical and Electronic Engineers (IEEE)		
9.10	IEEE C37.23		
9.11	IEEE C57.12.01		
9.12	IEEE C57.12.10		
9.13	IEEE C57.12.51		
9.14	IEEE C57.12.70		
9.15	IEEE C57.12.80		
9.16	IEEE C57.12.91		
9.17	IEEE C57.13		
9.18	IEEE C62.1		
9.19	IEEE C62.11		
9.20	IEEE Std. 21		
9.21	IEEE Std. 24		
9.22	National Electric Code (NEC)		
9.23	NEC 70		
9.24	National Electric Safety Code (NESC)		
9.25	National Electrical Manufacturers Association (NEMA)		
9.26	NEMA TR-1		
9.27	National Fire Protection Association (NFPA)		
9.28	Underwriters Laboratories (UL)		
9.29	UL 94		
9.30	Other		

10	**Data to be supplied by Manufacturer**	
10.01	**Guaranteed Losses**	
10.02	No Load Losses (kW)	
10.03	Load Losses at Base kVA (kW)	
10.04	Impedance at Base kVA (kW)	
10.05	X/R Ratio	
10.06	Zero Phase Sequence Impedance (%)	
10.07	**Other Information**	
10.08	Overall Dimensions (Length x Width x Height) (inches)	
10.09	Shipping Weight (Lbs)	
10.10	Total Installed Weight (Lbs)	
11	**Additional Comments**	
11.01		

Project: GE/Southern/Linde Advanced NGCC Integration
KED #: 20041223
Revision: 0

SPECIFICATION 94.03.20.150
Oil Filled Station Service Transformer(s)

Item	Description	Specified Data	By Bidder	See Note	Rev. #
	Specification Summary				
	This specification covers the design, fabrication, testing and delivery of Station Service Transformer(s) in accordance with this specification and stated Standards. Site parameters can be found in additional attachments.				
1	**General Requirements**				
1.01	Quantity	**Two (2)**			
1.02	Tag Number	**See One-Line**			
1.03	Application	**Outdoor**			
1.04	Cooling Class	**ONAN/ONAF**			
1.05	Temperature Rise	**65°C**			
1.06	Number of Windings	**2**			
1.07	Frequency (Hz)	**60**			
1.08	Near Field Sound Pressure Level (dbA) at 3 Feet	**85**			
1.09	Impedance at Base Rating (%)	**See One-Line**			
1.10	Evaluation Basis for losses ($ / kW)	**$1,000**			
2	**Windings Requirements**				
2.01	Winding # 1, HV				
2.02	Rated Power per cooling class (kVA)	**See One-Line**			
2.03	Rated Voltage (kV)	**13.8**			
2.04	Connection	**Delta**			
2.05	Line BIL (kV)	**95**			
2.06	Neutral BIL (kV)	**N/A**			
2.07	Winding # 2, XV				
2.08	Rated Power (kVA)	**See One-Line**			
2.09	Rated Voltage (V)	**4.16**			
2.10	Connection	**Wye**			
2.11	Line BIL (kV)	**60**			
2.12	Neutral BIL (kV)	**60**			
2.13	Winding Material	**100% copper**			
2.14	Maximum Winding Hot Spot Rise Above Ambient (°C)	**80**			
3	**Insulating Material**				
3.01	Type of Insulating Material	**Less flamable hydrocarbon**			
3.02	Insulating Material Preservation	**Sealed Tank**			
4	**Tap Changers**				
4.01	Regulated Winding	**HV Winding**			
4.02	Tap Changer Type	**Off-Load**			
4.03	Tap Changer Control	**Manual Hand Crank**			
4.04	Number of Steps Plus - Increment	**2 @ +/- 2.5 (total range of +/- 5%)**			
4.05	Number of Steps Minus - Increment	**2 @ +/- 2.5 (total range of +/-5%)**			
5	**Bushings**				
5.01	High Voltage, HV Rated Line Voltage (kV)	**13.8**			
5.02	Bushing Material	**Porcelain**			
5.03	BIL (kV)	**95**			
5.04	Termination Compartment	**Yes**			
5.05	Termination Type	**Cable**			
5.06	HO Neutral Bushing BIL (kV)	**N/A**			
5.07	Low Voltage, XV Rated Line Voltage (V)	**4.16**			
5.08	Bushing Material	**Porcelain**			
5.09	BIL (kV)	**60**			
5.10	Termination Compartment	**Yes**			
5.11	Termination Type	**Cable**			
5.12	XO Neutral Bushing BIL (kV)	**60**			
6	**Neutral Grounding Equipment**				
6.01	Connection Point	**Low Voltage Winding**			
6.02	Method	**Resistance**			
6.03	Rated Voltage (V)	**2.404624277**			
6.04	Resistor	**Yes**			
6.05	Amperes	**800**			
6.06	Ohms	**As Required**			
6.07	Time Duration (Seconds)	**10s**			
6.08	Mounted on Transformer	**Yes**			
7	**Additional Items**				
7.01	**Protection Devices**				
7.02	Winding Temperature Indicator	**Included**			
7.03	Ground Fault Indicator - Pulse Type	**N/A**			
7.04	**Technical Service**				
7.05	Three (3) days Technical Supervision at Installation	**N/A**			
7.06	Three (3) days Technical Supervision at Power up	**N/A**			
7.07	**Power Supplies (Provided by others)**				
7.08	Auxiliary Power/Control AC Power	**120V 1-Phase**			
7.09	**Paint System and Color**				
7.10	Tank and Accessories Color	**ANSI 70 Light Gray**			
7.11	Painting System	**Manufacturer Standard**			
7.12	Porcelain Color	**Gray**			

8	Spare Parts		
8.01	HV Bushing	N/A	
8.02	LV Bushing	N/A	
8.03	Neutral Bushing	N/A	
8.04	Full Set of Gaskets	Included	
8.05	Enclosure for Noise Level Reduction	N/A	
8.06	Winding Temperature Indicator	N/A	
8.07	Manufacturer Recommended Start-Up Spare Parts	N/A	
8.08	Manufacturer Recommended Two-Year Spare Parts	N/A	

9	Required Testing		
9.01	Manufacturer's Standard Testing	Included	
9.02	ANSI C57.12.00 and C57.12.90 Test Requirements:		
9.03	Resistance Measurement Test	Included	
9.04	Polarity and Phase Relation Tests	Included	
9.05	Ratio Tests	Included	
9.06	No-Load and Excitation Current Tests	Included	
9.07	Load Losses and Impedance Voltage Tests	Included	
9.08	Dielectric Tests	Included	
9.09	Temperature Rise Tests	Included	
9.10	Short Circuit Tests	N/A	
9.11	Audible Sound Emissions Tests	Included	

10	Codes and Standards		
10.01	Follow All the Latest Applicable Standards and Codes Including but Not Limited To		
10.02	American National Standards Institute (ANSI)		
10.03	American Society of Testing and Materials (ASTM)		
10.04	ASTM D3487-82A		
10.05	ASTM D3487-88		
10.06	ASTM D3487-923		
10.07	Canadian Electrical Code (CEC)	N/A	
10.08	Canadian Standards Association (CSA)	N/A	
10.09	Institute of Electrical and Electronic Engineers (IEEE)		
10.10	IEEE C57.12.00		
10.11	IEEE C57.12.10		
10.12	IEEE C57.12.13		
10.13	IEEE C57.12.22		
10.14	IEEE C57.12.26		
10.15	IEEE C57.12.28		
10.16	IEEE C57.12.70		
10.17	IEEE C57.12.80		
10.18	IEEE C57.12.90		
10.19	IEEE C57.13		
10.20	IEEE C57.13.2		
10.21	IEEE C57.19.00		
10.22	IEEE C57.19.01		
10.23	IEEE C57.91		
10.24	IEEE C57.92		
10.25	IEEE C57.109		
10.26	IEEE C57.116		
10.27	IEEE C57.121		
10.28	IEEE C62.11		
10.29	IEEE Std. 21		
10.30	IEEE Std. 24		
10.31	National Electric Code (NEC)		
10.32	National Electric Safety Code (NESC)		
10.33	National Electrical Manufacturers Association (NEMA)		
10.34	NEMA TR-1		
10.35	NEMA TR-98		
10.36	National Fire Protection Association (NFPA)		
10.37	Underwriters Laboratories (UL)		
10.38	Other		

11	Data to be supplied by Manufacturer	
11.01	Guaranteed Losses	
11.02	No Load Losses (kW)	
11.03	Load Losses at Base kVA (kW)	
11.04	Total Losses at Base kVA (kW)	
11.05	Impedance at Base kVA (%)	
11.06	X/R Ratio	
11.07	Zero Phase Sequence Impedance (%)	
11.08	Other Information	
11.09	Overall Dimensions (Length x Width x Height) (inches)	
11.10	Shipping Weight (Lbs)	
11.11	Total Installed Weight including Oil (Lbs)	
11.12	Total Insulating Liquid quantity (US Gal)	
11.13	Shipped Oil Filled (Yes or No)	

12	Additional Comments	
12.01		

APPENDIX A

OVERALL ONE-LINE

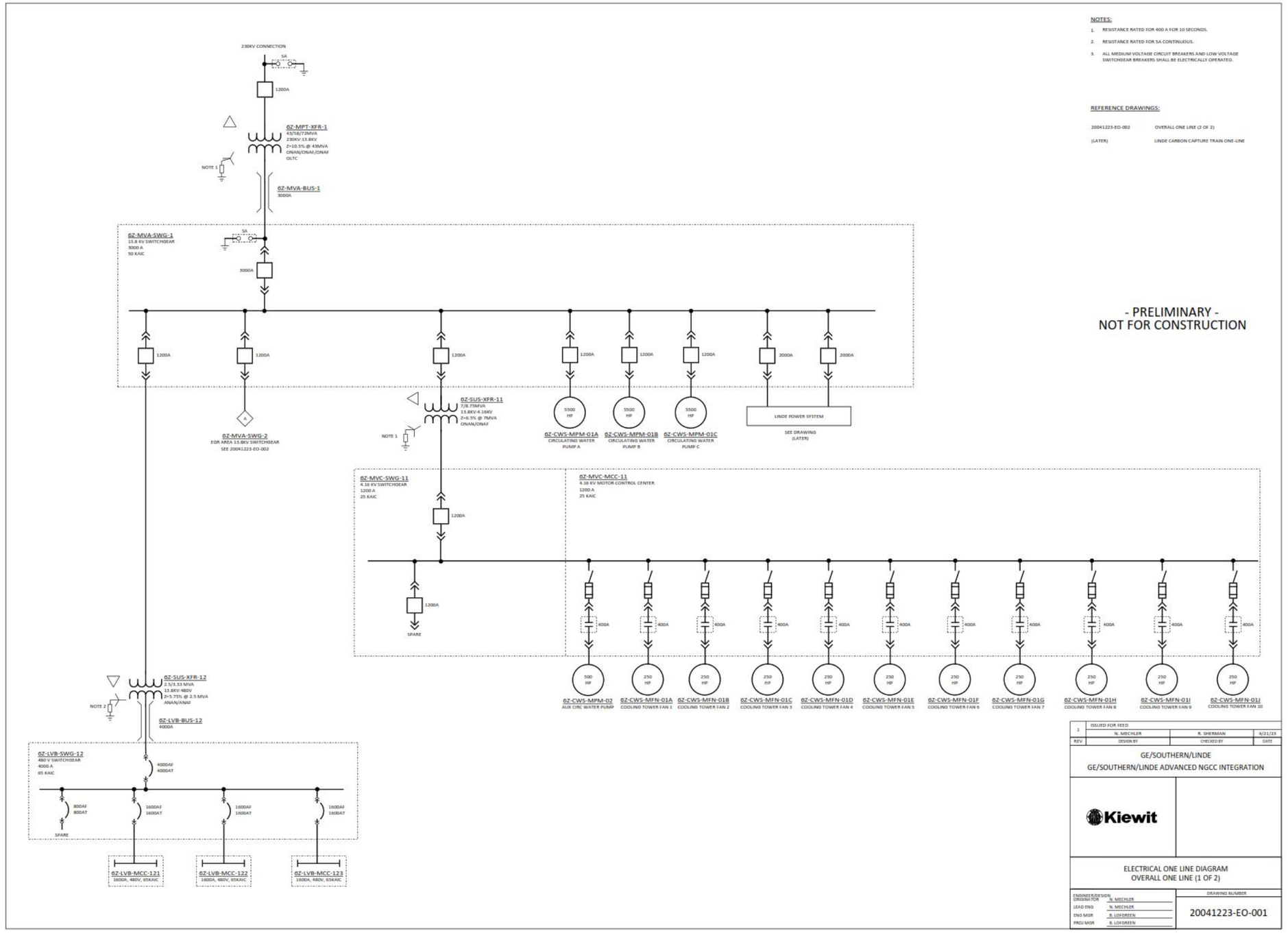
NOTES:
1. RESISTANCE RATED FOR 400 A FOR 10 SECONDS.
2. RESISTANCE RATED FOR 5A CONTINUOUS.
3. ALL MEDIUM VOLTAGE CIRCUIT BREAKERS AND LOW VOLTAGE SWITCHGEAR BREAKERS SHALL BE ELECTRICALLY OPERATED.
REFERENCE DRAWINGS:
20041223-EO-002 OVERALL ONE LINE (2 OF 2)
(LATER) LINDE CARBON CAPTURE TRAIN ONE-LINE
- PRELIMINARY -
NOT FOR CONSTRUCTION
230KV CONNECTION
6Z-MPT-XFR-1
6Z-MVA-BUS-1
6Z-MVA-SWG-1
13.8 KV SWITCHGEAR
6Z-MVA-SWG-2
6Z-SUS-XFR-11
6Z-CWS-MPM-01A
6Z-CWS-MPM-01B
6Z-CWS-MPM-01C
LINDE POWER SYSTEM
6Z-MVC-SWG-11
4.16 KV SWITCHGEAR
6Z-MVC-MCC-11
4.16 KV MOTOR CONTROL CENTER
6Z-SUS-XFR-12
6Z-LVB-BUS-12
6Z-LVB-SWG-12
480 V SWITCHGEAR
6Z-LVB-MCC-121
6Z-LVB-MCC-122
6Z-LVB-MCC-123
6Z-CWS-MFN-01A
6Z-CWS-MFN-01B
6Z-CWS-MFN-01C
6Z-CWS-MFN-01D
6Z-CWS-MFN-01E
6Z-CWS-MFN-01F
6Z-CWS-MFN-01G
6Z-CWS-MFN-01H
6Z-CWS-MFN-01J
6Z-CWS-MFN-02
ISSUED FOR FEED
N. MECHLER
R. SHERMAN
4/21/23
GE/SOUTHERN/LINDE
GE/SOUTHERN/LINDE ADVANCED NGCC INTEGRATION
Kiewit
ELECTRICAL ONE LINE DIAGRAM
OVERALL ONE LINE (1 OF 2)
20041223-EO-001

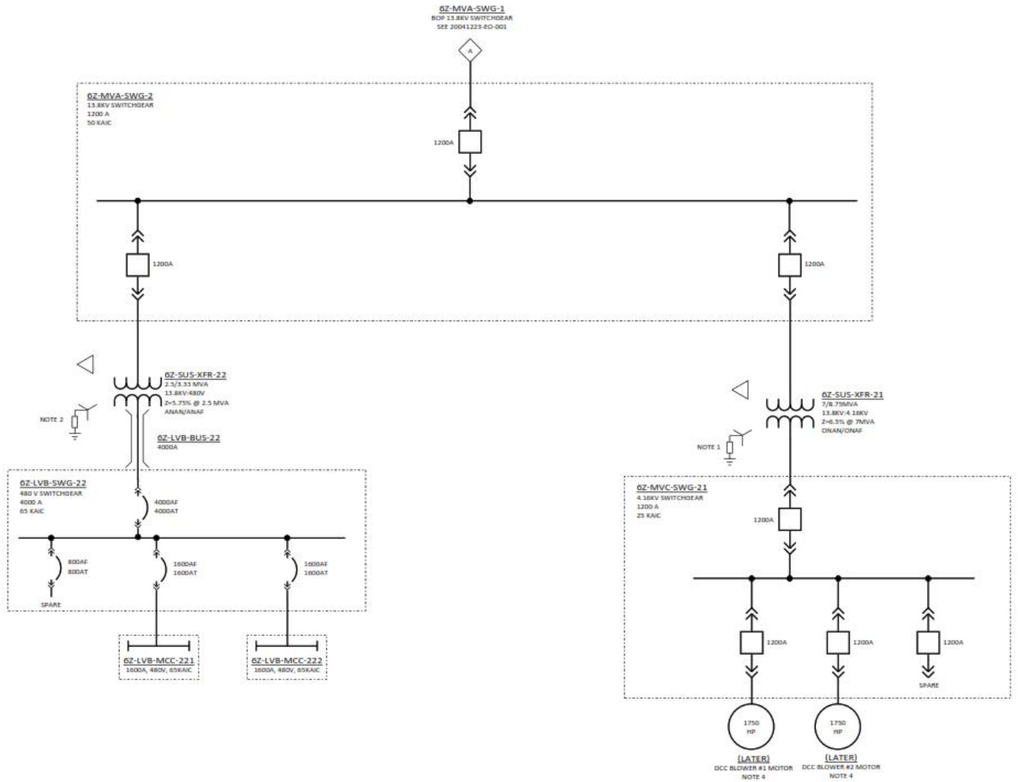

NOTES:

1. RESISTANCE RATED FOR 400 A FOR 10 SECONDS.
2. RESISTANCE RATED FOR 5A CONTINUOUS.
3. ALL MEDIUM VOLTAGE CIRCUIT BREAKERS AND LOW VOLTAGE SWITCHGEAR BREAKERS SHALL BE ELECTRICALLY OPERATED.
4. MOTOR SUPPLIED BY GE.

REFERENCE DRAWINGS:

20041223-EO-001	OVERALL ONE LINE (1 OF 2)
(LATER)	LINDE CARBON CAPTURE TRAIN ONE-LINE

- PRELIMINARY -
NOT FOR CONSTRUCTION

REV	DESIGN BY	CHECKED BY	DATE
1	ISSUED FOR FEED		
	N. MECHLER	R. SHERMAN	4/21/23

GE/SOUTHERN/LINDE

GE/SOUTHERN/LINDE ADVANCED NGCC INTEGRATION

Kiewit

ELECTRICAL ONE LINE DIAGRAM
OVERALL ONE LINE (2 OF 2)

ENGINEER/DESIGN ORIGINATOR	N. MECHLER
LEAD ENG	N. MECHLER
ENG MGR	B. LOFGREEN
PROJ MGR	B. LOFGREEN

DRAWING NUMBER: 20041223-EO-002

Appendix MM

OSBL Substation Electrical Enclosures Specification

Notes:

(1) The Factory Acceptance Test Procedure within this specification is marked “DRAFT”. This procedure will be updated at time of purchase order.

Kiewit

SPECIFICATIONS FOR
SUBSTATION ELECTRICAL ENCLOSURE

94.03.26.100

GE / SOUTHERN / LINDE ADVANCED NGCC

KIEWIT PROJECT NO. 20041223

ISSUED: APRIL 28, 2023

REVISION 0 – ISSUED FOR FEED

TECHNICAL SPECIFICATIONS

TABLE OF CONTENTS

TITLE		Pages	Revision
1B	Section 1B	1B-1 – 1B-5	0
1E	Electrical Enclosure Specification	1E-1 – 1E-3	0
2E	Relay Panel Specification	2E-1 – 2E-2	0
TECHNICAL REQUIREMENTS			
APPENDIX A	Substation One-Line Diagrams	1 page	0
APPENDIX B	Enclosure Layouts	1 page	0
APPENDIX C	Substation General Arrangement	1 page	0
APPENDIX D	FAT Procedures	34 pages	0
GENERAL REQUIREMENTS			
E1	Motors-Induction Squirrel Cage Type	E1-1 – E1-21	
E2	Seller Furnished Controls and Wiring	E2-1 – E2-16	
I1	Seller Furnished Programmable Logic Controllers	I1-1 – I1-6	
I2	General Instrumentation Requirements	I2-1 – I2-12	
I3	Cybersecurity Requirements	I3-1 – I3-9	
S1	Structural Loading and Design	S1-1 – S1-10	

ESTIMATING SECTION 1B

1. SITE DESIGN CONDITIONS: The Site conditions to be used as design and performance criteria are as follows:

   - Main Plant Finish Grade Elevation (Mean Sea Level) : 23 feet
   - Barometric pressure: 14.7 psia
   - High Ambient Temperature: 105 ° F
   - Low Ambient Temperature: 0 ° F
   - Temperature; Indoor Ambient (Dry Bulb)
     Occupied areas (Air Conditioned) 65 ° F to 75 ° F
     Non-occupied areas (Ventilated and Heated only) 40 ° F to 100 ° F

2. UTILITIES FOR COOLED EQUIPMENT:

   - Instrument Air Pressure Range: 60 – 120 psig
   - Design temperature for air cooled equipment: 105 ° F
   - Design cooling water inlet temperature for water-cooled equipment: 86 ° F
   - Cooling Water Composition 0% propylene glycol/100% water
   - Cooling Water Design Pressure 150 psig
   - Cooling Water Pressure Drop/Temperature Rise (NTE): 10psi /20 ° F

3. STRUCTURAL:

   - Precipitation: Average rainfall: 64 inches/year
   - Design 24 hour Storm Event 25 year / 100 year: 10.3 inches / 14.0 inches
   - Design Snow Loading: 0 psf ground / 0 psf roof (ASCE 7-16)
   - Minimum Design Basic Wind Speed: 153 mph (ASCE 7-16 – Risk Category III)
   - Design Wind Load and importance factor: I_w=1.00 (ASCE 7-16)
   - Exposure: C

ESTIMATING SECTION 1B

- Seismic Loading: Seismic Importance Factor I=1.25
  Occupancy / Risk Category III
  Site Class D
  Spectral Response Accelerations S_S=0.095 g, S_1=0.059 g
  Site coefficients F_a=1.6 and F_v=2.4
  Spectral Response Coefficients S_{DS}=0.109 g, S_{D1}=0.102 g
  Seismic Design Category B
  ATC Hazards by Location (ASCE 7-16)
- Winter Design: Freeze Protection is required; Frost depth = 12”
- Design life of the Facility: 30 years

4. NOISE CONTROL:

   Near Field: The A-weighted sound pressure level resulting from the operation of equipment furnished under these specifications (including drive motors) shall not exceed a free-field average (per piece of equipment) of 85 dBA along the equipment envelope at a height of 5 feet (1.5 meters) above the ground and personnel platforms. The equipment envelope is the perimeter line that completely encompasses the equipment package (including noise control devices) at a distance of 3 feet (1 meter) from the equipment face.

   Far Field: The A-weighted sound pressure level (dBA) at 400 ft from the emission source should be provided for EPC to evaluate the overall plant noise level at the plant boundary.

5. SITE ACCESS:

   The jobsite is located at Plant Barry in Bucks, Alabama. The jobsite can be accessed from the following:

   Road: The site is accessible from Highway 43

   Rail: No site rail access.

   Barge: Barge can be transported via the Mobile River through the Mobile Bay.

6. ADDITIONAL SITE CONSIDERATIONS:

7. GENERAL DESIGN REQUIREMENTS:
   a. Asbestos-containing materials will not be allowed.

ESTIMATING SECTION 1B

b. Only proven and tested technology fo the same model or nominal size and design conditions and in successful operation for at least five years in the exact same application shall be provided. There shall be no exception to this clause.

c. For projects located in Canada, CRN certification and local province requirements shall be incorporated into the equipment and pressure piping system design.

d. Mandatory Construction and Commissioning: One complete set of parts indicated in the Seller's documentation requiring to be replaced during the Construction, Testing or Startup phases of the Project (Mandatory Construction and Commissioning Parts) shall be included in the Seller's scope. For example, manway gaskets, hydro kit gaskets, or other that are routinely replaced after inspections and tests.

e. Pump Designs:Shut-off head at design speed shall be between 115 and 140% of the maximum total dynamic head (excluding circulating water pumps).

f. All rotating components and assemblies shall be dynamically balanced in accordance with Table 1 of ISO 1940.

g. Piping Design:
   i. Unless otherwise indicated in this specification, the minimum carbon steel piping schedule for NPS 2-1/2" and larger is STD, for 2" and smaller is Schedule 80.
   ii. Unless otherwise indicated in this specification, the minimum stainless steel piping schedule for NPS 2-1/2" and larger is 10S, for 2" and smaller is Schedule 40S.
   iii. Minimum allowable resultant force at each equipment nozzle shall be 250 lbs per nominal pipe size (NPS), and the minimum allowable resultant moment at each equipment nozzle shall be 500 ft-lbs per NPS. For instance, a 4 inch nozzle shall be designed for minimum 1,000 lbs resultant force and 2,000 ft-lbs resultant moment.
   iv. For skidded and Seller provided piping, high point vents and low point drains shall be provided. Vents and drains shall normally be isolated with globe valves and gate valves respectively, in liquid service. Ball valves shall be provided for vents & drains in natural gas and air services.
   v. Corrosion Allowance: Pipe wall thickness shall be calculated using the following corrosion allowances:
      - Carbon & Low/Intermediate Alloy Steels: 0.020"
      - Creep Strength Enhanced Ferritic (CSEF) Steels – 0.060"
      - Stainless Steel and Nickel Alloys : 0.000"
   vi. Steel flanges 2-1/2 inch and larger except for grooved pipe shall be weld neck, slip-on type is permitted for class 150 only, and all steel flanges 2 inch and smaller shall be of the socket type.
   vii. Fittings for tubing shall be flareless compression type, Swagelok or Parker Type 316 stainless steel.

ESTIMATING SECTION 1B

viii. All vent and drain islolation valves and instrument root valves rated ASME Class 900 or greater shall utilize double block root valves.
ix. Valve Actuators: Gear actuators shall be used on all valve sizes greater than 6 inch, and on any valve requiring more than 75 pounds rim pull to operate the valve at the maximum differential pressure.
x. All valve bonnets for valves with design temperatures of 150F or higher shall be provided with bonnet over pressure protection.

h. Approved Vendors:
i. Steel body gate, globe, angle, and check valves shall be manufactured by Velan, Crane, Pacific Valves, Anderson Greenwood-Crosby, Edward Vogt, SPX Corporation, Fisher Controls International, or Dresser, Inc.
ii. Butterfly valves shall be manufactured by Bray, Crane, Xomox, Ebro, Amri, or Centerline.
iii. Control valves shall be manufacturered by Fisher, Valtek, Leslie, Koso, or CCI.
iv. Coupling shall be of the flexible spacer type by Falk, Zurn, or engineer approved equal.
v. Instruments shall be manufacturered by:
- Transmitters: Rosemount, Foxboro
- Level Gauges: Jerguson
- Pressure Gauges, Temperature Switches: Ashcroft
- Temperature Gauges: Ashcroft EI case style
- Pressure and Differential Pressure Switches: Ashcroft, Merriam, Midwest
- Level Switches: Magnetrol, SOR, Jerguson/Magne-Sonics
- Solenoid Valves: ASCO
- Critical Service Flow Elements:, Triad, Fluidic Technologies, PFS
- Non-Critical Service Flow Elements: Dietrich Standard, Deltabar/Midwest Instruments, Veris
- Heated Instrument Enclosure: O'Brien

i. General Weld Requirements:
- Structural steel welding shall be in accordance with the applicable AWS welding code.
- Welding of fluid-conveying, non-structural steel, piping and pressure-containing materials shall be in accordance with ASME BPVC Section IX.

8. Quality and Examination Requirements:
a. Seller and Seller's sub-suppliers shall have a Quality Management System, approved by the buyer, in accordance with ISO9001. The Seller shall provide transparent supply chain integrity for the material sources.

b. Records in accordance to referenced code shall be maintained and available for submittal to the Buyer upon request. These records include but are not limited to:
i. Material Test Reports (MTR) of base and welding materials
ii. Welding Procedure Specification (WPS) and supporting Procedure Qualification Record (PQR)

ESTIMATING SECTION 1B

iii. Heat Treatment Records
iv. Final Non Destructive Examination (NDE) reports
v. Repair records
vi. Personnel qualification records
vii. Nonconformance reports
viii. Manufacture's Data Reports (MDR)

END OF SECTION

Project: GE/Southern/Linde Advanced NGCC Integration
Kiewit #: 20041223
Revision: 0

1E - SPECIFICATION 94.03.26.100
Electrical Enclosure

Item	Description	Specified Data	By Bidder	See Note	Rev. #
	Specification Summary				
	This specification covers the design, fabrication, testing and delivery of the Electrical Enclosure(s) in accordance with this specification and stated Standards. Site parameters can be found in additional attachments.				
1	**General Requirements**				
1.01	Application	**Outdoor**			
1.02	Quantity	**See Enclosure Layouts**			
1.03	Minimum Interior Length	**Per Equipment Layout Drawing**			
1.04	Minimum Interior Width	**Per Equipment Layout Drawing**			
1.05	Minimum Interior Height	**12FT**			
1.06	**Shipping splits**				
1.07	Substation Enclosure	**1**			
2	**Construction Requirements**				
2.01	**Enclosure shall be anchored to and supported by:**				
2.02	Substation Enclosure	Stilts	**By Contractor**		
2.06	**Heavy Structural Steel Enclosure Base, Rigidly Braced**				
2.07	Welded Perimeter Beam Construction, Skid Type	**Included**			
2.08	Structural Steel Angle Iron Supports	**Not Included**			
2.09	Removable Lifting Lugs	**Included**			
2.10	Floor shall be 1/4" Steel Plate Welded to Base & Perimeter	**Included**			
2.11	Floor Covering shall be Durable Non-Skid Gray Floor Enamel	**Included**			
2.12	Floor Penetrations with Surface Mounted Covers	**Included**			
2.13	4" cutouts for conduit entry (includes ground bushing)	**80 for MV and STG PDC; 40 each for other PDCs**			
2.14	**Roof (Peak 3" per 15' to Shed Water)**				
2.15	Painted Aluminum Gutter & Downspouts	**Included**			
2.16	Roof Penetrations with Weathertight Seals	**Included**			
2.17	Design Roof Loading (lbs per square foot)	**See Section 1B**			
2.18	**Walls**				
2.19	Exterior Panels shall be 18 Guage Galvanized Steel	**Included**			
2.20	Interior Panels shall be 16 Guage Galvanized Steel	**Included**			
2.21	Wall Penetrations with Weathertight Seals	**Included**			
2.22	Design Wind Loading (MPH)	**See Section 1B**			
2.23	**Minimum Insulation**				
2.24	Wall Insulation	**R-11**			
2.25	Ceiling Insulation	**R-19**			
2.26	Floor Insulation	**R-8**			
2.27	**Doors**				
2.28	Material	**14 Guage Galvanized Steel**			
2.29	Features				
2.30	Panic Door Hardware	**Included**			
2.31	Auto Closer	**Included**			
2.32	Hold-Open Alarm	**Included**			
2.33	Viewing Window	**Included**			
2.34	Key Lock	**Included**			
2.35	Exterior Rain Canopies	**Included**			
2.36	Double Wide doors shall be 6' W x 8' H	**Included**			
2.37	Single Wide doors shall be 4' W x 8' H	**Included**			
2.38	Rear Access Doors for Installed Equipment	**Included**			
2.39	**Paint Finish**				
2.40	Roof & Walls, Interior & Exterior	**Polyester Powdercoat**			
2.41	Floor, Exterior	**Epoxy Mastic Undercoat**			
2.42	Floor Interior	**Non-Skid Paint**			
2.43	Battery Room Floor, Interior	**Acid Resistant Epoxy Coating**			
2.44	Battery Rack	**Acid Resistant Epoxy Coating**			
3	**Accessories**				
3.01	**Lighting**				
3.02	Minimum Illumination Level	**35 Foot Candles at Floor Level**			
3.03	Electric Fluorescent Fixtures, 120VAC, 2-32 Watt	**Included**			
3.04	Exterior Light, 70 Watt HPS, Photocell Activated, at Each Door	**Included**			
3.05	Interior Exit & Emergency Light Fixtures	**Included**			
3.06	Three Way Light Switches at Each Door	**Included**			
3.07	**Receptacles, Duplex 120VAC, 20A, GFCI**				
3.08	Two (2) Interior GFCI Receptacles	**Included**			
3.09	Two (2) Exterior GFCI Receptacles	**Included**			
3.10	**60A Welding Receptacle with integral disconnect mounted and wired to external module wall prior to shipment**	**Included**			
3.11	**Fire Protection**				
3.12	Fire Extinguishers, CO2, 20 lbs., Rated B-C Fire Class	**Included**			
3.13	Two (2) Smoke Detectors with Auxiliary Contacts	**Included**			
3.14	Manual Pull Fire Alarm Station	**Included**			
3.15	**Building Service Transformer**				
3.16	Size	**45 kVA, 3 Ph, 480-208/120VAC**			
3.17	Vibration-Isolating Mounting	**Included**			
3.18	**Panelboard**				
3.19	One (1) 480V, 225A, 3 Ph, 3 Wire, 36 Pole Panelboard	**Included**			
3.20	One (1) 208/120V, 225A, 3 Ph, 3 Wire, 42 Pole Panelboard	**Included**			
3.21	**HVAC**				
3.22	Minimum Indoor Temperature (Degree F)	**58**			
3.23	Maximum Indoor Temperature (Degree F)	**78**			
3.24	Adjustable Thermostat	**Included**			
3.24	Supply Power	**480VAC, 3 Ph**			
3.25	Redundancy	**N+1**			
3.26	**Grounding System**				
3.26	Silver Plated Copper Ground Loop, 1/4" x 2"	**Included**			
3.27	Stainless Steel Ground Pads on Diagonal Building Corners	**Included**			

3.28	Each Equipment Ground Bus Connected to Building Ground	**Included**	
4	**Installation & Wiring of Buyer Provided Equipment**		
4.01	Medium Voltage Switchgear & Motor Control Center	**Not Included**	
4.02	Low Voltage Switchgear	**Not Included**	
4.03	Low Voltage Motor Control Center	**Not Included**	
4.04	DCS Wiring	**Included**	
4.05	DC Equipment	**Included**	
4.06	UPS Equipment	**Included**	
4.07	Non-Seg Bus with Weathertight Seal	**Not Included**	
4.08	Number of Terminations	**See Bid Form**	
5	**Additional Items**		
5.01	Plant Battery System Safety Accessories		
5.02	Stainless Steel Drip Pan with Floor Drain	**Not Included**	
5.03	Eye Wash & Bowl	**Not Included**	
5.04	Emergency Shower	**Not Included**	
5.05	PPE Cabinet	**Not Included**	
6	**Spare Parts**		
6.01	One Gallon Exterior Paint	**Required**	
6.02	One Gallon Interior Paint	**Required**	
6.03	One Gallon Non-Skid Floor Paint	**Required**	
6.04	Manufacturer Recommended Start-Up Spare Parts	**Required**	
6.05	Manufacturer Recommended Two-Year Spare Parts	**Not Required**	
7	**Codes and Standards**		
7.01	Follow All the Latest Applicable Standards and Codes Including but Not Limited To		
7.02	American Institute of Steel Contruction (AISC)		
7.03	American National Standards Institute (ANSI)		
7.04	American Society of Testing and Materials (ASTM)		
7.05	Canadian Electrical Code (CEC)	**N/A**	
7.06	Canadian Standards Association (CSA)	**N/A**	
7.07	Institute of Electrical and Electronic Engineers (IEEE)		
7.08	National Electric Code (NEC)		
7.09	National Electric Safety Code (NESC)		
7.10	National Electrical Manufacturers Association (NEMA)		
7.11	NEMA ST-20 Dry Type Transformer for General Applications		
7.12	National Fire Protection Association (NFPA)		
7.13	Underwriters Laboratories (UL)		
7.14	489 Molded-Case Breakers and Circuit Breaker Enclosures		
7.15	506 Special Transformers		
7.16	943 Ground-Fault Circuit Interrupters		
7.17	Other		
8	**Drawings Supplied as part of this Specification**		
8.01	Site General Arrangement	**Included**	
8.02	One-Line Diagram	**Included**	
8.03	Module and Equipment Layout	**Included**	
9	**Data to be supplied by Vendor**		
9.01	Interior Length		
9.02	Interior Width		
9.03	Interior Height		
9.04	Bill of Materials		
9.05	Shipping Weight (lbs) (with all Equipment)		
10	**Required Production Documentation (not limited to the list below)**	Weeks after NTP (unless noted otherwise)	
10.01	O&M Manuals - Standard 3-ring binder	4 weeks after delivery	
10.02	# of Proof copies required - 4	N/A	
10.03	# of Final copies required - 8	N/A	
10.04	# of CD's required - 8	N/A	
10.05	Special O&M Manual requirements - None	N/A	
10.06	Outline with overall dimensions, NTE weights, foundation requirements	6	
10.07	Final Layout dwgs	12	
10.08	Building electrical drawings - includes lighting layouts, panelboard schedules, wiring diagrams, circuit and termination schedule for building wiring	12	
10.09	PE Stamped structural drawings (if required)	16	
10.10	PE Stamped HVAC and lighting drawings (if required)	8	
11	**Testing requirements**		
11.01	Minimum number of factory acceptance tests per module	One	
11.02	Expected duration of each acceptance test	2 Days	
11.03	Basic tests to include Seller is expected to support:		
11.04	Continuity test on all control cables with required documentation	Include	
11.05	Seller to apply voltage and function test all installed equipment	Include	
11.06	Point to Point wire checks including termination pull test to ensure cables are landed securely	Include	
11.07	Megger test of all MV and LV buses assembled at the PDC supplier location - include documentation	Include	
11.08	Megger test of any MV cable installed by supplier - include documentation	Include	
12	**Typical Payment Milestones**		
12.01	Upon approval of engineering deliverables for all major equipment being supplied	10%	
12.02	Upon submittal of unpriced purchase orders for major equipment	20%	
12.03	Upon Seller's receipt of Contractor's release for fabrication	10%	
12.04	Upon proof of Seller's receipt of major equipment to PDC Supplier	20%	
12.05	Upon complete delivery and acceptance of PDC and loose shipped equipment to project site	35%	
12.06	Upon Contractor approval of final O&M manuals and all outstanding engineering deliverables	5%	

13	***Expected Delivery***	*10 months after NTP for first module - subsequent modules every two weeks afterwards*	
14	**Additional Comments**		
14.01			

Project: GE/Southern/Linde Advanced NGCC Integration
#: 20041223
Prepared by: Nick Mechler

2E - SPECIFICATION 94.03.26.100
RELAY PANELS

Specification Summary			
This specification covers the design of Relay Panels in accordance with this specification and referenced Standards.			
Item	**Description**	**Specified Data**	**By Bidder**
		Relay Panel	
1	**General Requirements**		
1.01	Quantity	See BOM and Enclosure Layout	
1.02	Manufacturer		**X**
1.03	Model		**X**
1.04	Structure	Steel Frame, Free Standing	
1.05	Doors	Rear	
1.06	Swing Radius	105°	
1.07	Lockable Latch	Included	
1.08	Dimensions	30" x 30" x 90"	
1.09	Field Cable Entry Points	Top	
1.10	125VDC Power Bus	Included	
1.11	120VAC GFCI Convenience Receptacle	Included	
1.12	120VAC Panel Light, Door Activated	LED	
1.13	Gangable Design with Panel to Panel Cable Openings	Yes	
1.14	Number of Panels Ganged Pre-Shipment per Section	2	
1.15	Total Number of Ganged Sections	1	
1.16	All Intrapanel Wiring Completed Pre-Shipment	Included	
1.17	All Interpanel Wiring for Ganged Sections Completed Pre-Shipment	Included	
1.18	Panel General Wiring	600V, 90°, SIS, #14	
1.19	Panel Instrument Transformer Wiring	600V, 90°, SIS, #10	
1.20	Wire Markers (Both Ends of Cable)	Included	
1.21	Nameplates (All Equipment & Test Switches)	Included	
1.22	Ground Bus	Included	
1.23	Relay/Device Software	Included	
1.24	Schematics	Provided by Kiewit	
1.25	Panel Front Drawings	Provided by Kiewit	
1.26	Wiring Diagrams	Included	
1.27	Panel Structural Drawings	Included	
2	**Required Testing, Including but not Limited to:**		
2.01	Standard Panel Tests	Per IEEE and NEMA	
2.02	Relay Settings Upload and Test	Per IEEE and NEMA	
2.03	Relay Operation Tests	Per IEEE and NEMA	
2.04	Lockout Operation Tests	Per IEEE and NEMA	
2.05	Control Switch Operation Tests	Per IEEE and NEMA	
2.06	Meter Operation Tests	Per IEEE and NEMA	
2.07	Continuity Tests	Per IEEE and NEMA	
2.08			
3	**Follow all the Latest Applicable Codes and Standards Including but not Limited to:**		
3.01	American National Standards Institute (ANSI)		
3.02	American Society of Testing and Materials (ASTM)		
3.03	Institute of Electrical and Electronic Engineers (IEEE)		
3.04	National Electrical Code (NEC)		
3.05	National Electrical Safety Code (NESC)		
3.06	National Electrical Manufacturers Association (NEMA)		
3.07	National Fire Protection Association (NFPA)		
3.08	Underwriters Laboratories (UL)		

Project: GE/Southern/Linde Advanced NGCC Integration
#: 20041223
Prepared by: Nick Mechler

2E - SPECIFICATION 94.03.26.100
RELAY PANELS

Specification Summary			
This specification covers the design of Relay Panels in accordance with this specification and referenced Standards.			
Item	**Description**	**Specified Data**	**By Bidder**
		Relay Panel	
3.09			
4	**Expected Lead Time**		**X**
5	**Other Information**		
5.01	Overall Dimensions (Length x Width x Height)		**X**
5.02	Shipping Weight (Lbs)		**X**
5.03	Total Installed Weight (Lbs)		**X**
6	**Additional Comments**		
6.01			
6.02			
6.03			

APPENDIX A

SUBSTATION ONE-LINE DIAGRAMS

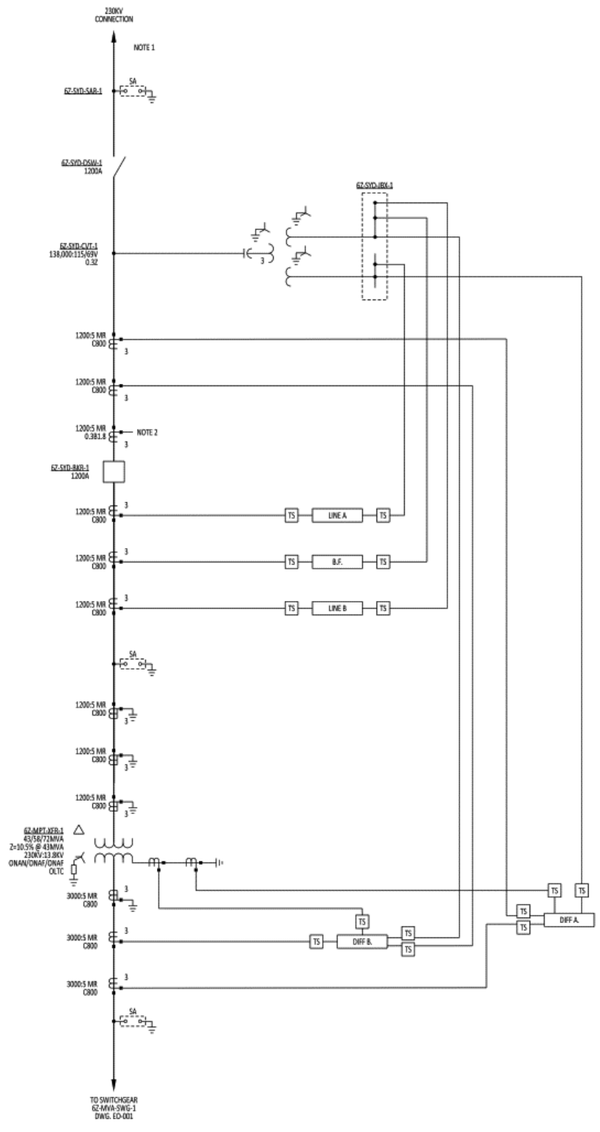

NOTES:

1. POINT OF INTERCONNECTION AT EXISTING 230KV TRANSMISSION LINE.
2. METERING REQUIREMENTS TO BE DETERMINED DURING DETAILED DESIGN.

REFERENCE DRAWINGS:

1. 20041223-PDS-500 GENERAL ARRANGEMENT
2. 20041223-ED-001 OVERALL ONE LINE

- PRELIMINARY -
NOT FOR CONSTRUCTION

REV	DESIGN BY	CHECKED BY	DATE
0	ISSUED FOR REVIEW		
	K.YIN	M. MCKNIGHT	04-28-23

GE/SOUTHERN/LINDE

GE/SOUTHERN/LINDE ADVANCED NGCC INTEGRATION

Kiewit

230/13.8KV
SUBSTATION ONE
LINE DIAGRAM

ENGINEER/DESIGN ORIGINATOR	K. YIN
LEAD ENG	N. MECHLER
ENG MGR	B. LOFGREEN
PROJ MGR	B. LOFGREEN

DRAWING NUMBER

20041223-PDS-001

APPENDIX B

ENCLOSURE LAYOUTS

LEGEND

- EQUIPMENT — PROVIDED AND INSTALLED BY SELLER
- EQUIPMENT — PROVIDED BY CONTRACTOR / INSTALL BY SELLER
- EQUIPMENT — PROVIDED AND INSTALLED BY CONTRACTOR
- EQUIPMENT — DEDICATED SPACE FOR FUTURE
- ELECTRICAL CLEARANCES
- PLATFORMS PROVIDED AND INSTALLED BY CONTRACTOR
- SHIPPING SPLIT

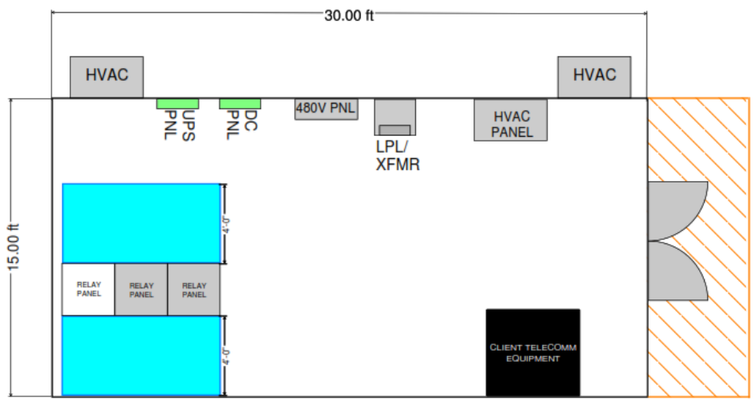

- PRELIMINARY -
NOT FOR CONSTRUCTION

REV	DESIGN BY	CHECKED BY	DATE
0	ISSUED FOR FEED		
	N. MECHLER		OPEN

GE/SOUTHERN/LINDE
GE/SOUTHERN/LINDE ADVANCED NGCC INTEGRATION

Kiewit

ELECTRICAL ARRANGEMENT DRAWING
SUBSTATION ELECTRICAL ENCLOSURE LAYOUT

ENGINEER/DESIGN ORIGINATOR	N. MECHLER
LEAD ENG	N. MECHLER
ENG MGR	B. LOFGREEN
PROJ MGR	B. LOFGREEN

DRAWING NUMBER: 20041223-EA-100

APPENDIX C

SUBSTATION GENERAL ARRANGEMENT

NOTES:

1. SPECIFIC POINT OF INTERCONNECTION TAP TO EXISTING 230KV TRANSMISSION LINE TO BE DISCUSSED DURING DETAIL DESIGN.
2. CABLE BUS TO MAIN POWER TRANSFORMER IS COMING FROM THE ELECTRICAL ENCLOSURE VIA UNDERGROUND TRENCH.

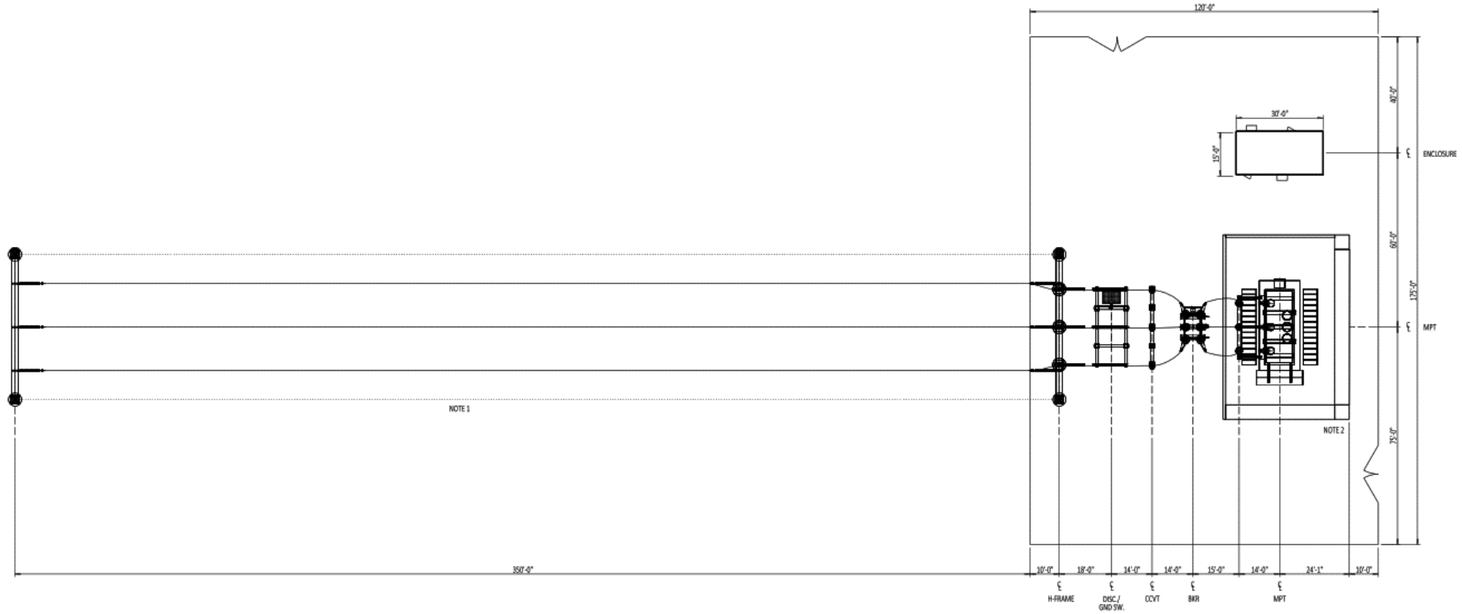

REFERENCE DRAWINGS:

PDS-001	SUBSTATION ONE LINE DIAGRAM

- PRELIMINARY -
NOT FOR CONSTRUCTION

REV	DESIGN BY	CHECKED BY	DATE
0	ISSUED FOR FEED: C. SEABAUGH	M. MCKNIGHT	04-13-23

GE/SOUTHERN/LINDE

GE/SOUTHERN/LINE ADVANCED NGCC INTERGRATION

Kiewit

230-13.8KV SUBSTATION
GENERAL ARRANGEMENT

ENGINEER/DESIGN ORIGINATOR	N. MECHLER
LEAD ENG	N. MECHLER
ENG MGR	B. LOFGREEN
PROJ MGR	B. LOFGREEN

DRAWING NUMBER: 20041223-PDS-500

SCALE: 1/16" = 1'-0"

4/17/2023 10:26:05 AM Colton.Seabaugh V:\ES\20041223-FEA2515_GE_Southern_Linde_Advanced_NGCC_Integration\ES\PD\PHP\20041223-PDS-500.dgn

APPENDIX D

FAT PROCEDURES

Kiewit

FACTORY ACCEPTANCE TEST PROCEDURE

POWER DISTRIBUTION CENTER (PDC)

DRAFT

Kiewit

CONTENTS

1. PURPOSE AND GENERAL INFORMATION 3
2. REFERENCE DOCUMENTS 4
3. DEFINITIONS 5
4. PRECAUTIONS AND PREREQUISITES 6
5. INSPECTIONS AND TESTS 7
5.1. VISUAL INSPECTIONS 7
5.2. MECHANICAL TESTS 14
5.3. ELECTRICAL TESTS 16
5.4. FUNCTIONAL TESTS 18
6. PUNCH LIST (ATTACHED) 33
7. ACKNOWLEDGMENT OF FACTORY ACCEPTANCE TEST COMPLETION: 34

DRAFT

Kiewit

1. PURPOSE AND GENERAL INFORMATION

This procedure covers Factory Acceptance Testing (FAT) and inspections of a single pre-fabricated Power Distribution Centers (PDC). The intent of the procedure is to ensure the building equipment and components have been duly tested and inspected to meet the design criteria as set forth in the approved specifications. This procedure is generic in nature and needs to be amended to match the project specific equipment and specification requirements.

The tests that need to be undertaken to successfully complete the FAT are broken up into four categories. These categories are listed below:

1. Verification Tests
2. Mechanical Tests
3. Electrical Tests
4. Functional Tests

If the requirements specified herein conflict with the Supplier / Original Equipment Manufacturer (OEM) requirement of testing and inspection, resolution will be determined on a case by case basis. If the conflict is between Supplier/OEM procedure and the applicable code and standards, the more restrictive of the two shall govern to the extent of such conflict.

Once the individual components have been successfully installed in the building, factory tests will be performed to verify that all equipment is properly installed, connected, and to ensure effective integration of all components prior to moving the building to site.

DRAFT

Kiewit

2. REFERENCE DOCUMENTS

2.1. Vendor Drawings

- 2.1.1. General Arrangement Drawings
- 2.1.2. Bill of Materials
- 2.1.3. Elevation Drawings
- 2.1.4. One-Line and Three-Line Diagrams
- 2.1.5. Schematics
- 2.1.6. Wiring and Interconnect Diagrams
- 2.1.7. Panel Schedules

2.2. KED Schematics

2.3. KED One-Line and Three-Line Diagrams

2.4. KED Panel Schedules

2.5. PDC Contract Specifications

2.6. Vendor supplied FAT Procedure / Agenda

DRAFT

Kiewit

3. DEFINITIONS

3.1. Continuity Test: These are tests performed to verify the cable installation in the building to ensure the wiring is connected as shown on the engineer approved drawings.

3.2. FAT: Factory Acceptance Tests.

3.3. Functional Tests: These are tests performed to verify proper operation of equipment as shown on the engineer approved drawings.

3.4. Mechanical Tests: These tests are to verify the physical integrity and operation of all equipment in the building.

3.5. Megger Test: These are tests performed to verify the integrity of the cable installation in the building and to ensure cable insulation. The purpose is to verify there is no damage to the cables wired to the equipment.

3.6. PDC: Power Distribution Center.

3.7. Verification Tests: These tests are to verify the assembled on-site equipment, components, bus, and accessories are correctly installed and labeled.

DRAFT

Kiewit

4. PRECAUTIONS AND PREREQUISITES

4.1. A conference call discussing the FAT procedure and agenda has been held with all Kiewit participants, Supplier / OEM, and owner at least one week prior to the commencement of the FAT.

4.2. Kiewit Lead Electrical Engineer, or their designee, will provide the latest and greatest red line drawings from any previous equipment FATs prior to the PDC FAT. Any information that deviates from the Kiewit approved vendor drawings to be examined and noted.

4.3. Kiewit Lead Electrical Engineer, or their designee, will ask the Supplier / OEM to provide the latest and greatest vendor drawings prior to the FAT and any information that deviates from the Kiewit approved vendor drawings to be examined and noted.

4.4. Kiewit Lead Electrical Engineer, or their designee, will ask the Supplier / OEM to provide the latest and greatest vendor circuit schedule prior to the FAT and any information that deviates from the Kiewit approved vendor circuit schedule to be examined and noted.

4.5. Kiewit Lead Electrical Engineer, or their designee, will ask the Supplier / OEM to provide the continuity, insulation resistance, and phasing test results for all cables in the vendor circuit schedule.

4.6. Kiewit Lead Electrical Engineer, or their designee, will ask the Supplier / OEM to provide the required temporary power for all items to be functionally tested as described in section 5.4.

4.7. This procedure needs to be followed and signed off by all Kiewit participants in addition to any Supplier / OEM procedure.

4.8. Use appropriate PPE and follow Kiewit as well as Supplier / OEM safe work practices during the course of FAT.

4.9. Functional test of the control scheme, logic and current / potential circuits shall be documented by highlighting the appropriate Kiewit and / or vendor schematics, three-line diagrams and logic diagrams.

4.10. Any corrections to the drawings shall be marked red for additions or green for deletions.

4.11. If particular tests or checks in this procedure are not applicable, mark the items as “NA” and a short explanation of why the items are not applicable in the Remarks section.

4.12. Any exceptions to this procedure shall be reviewed and approved by the Lead Electrical Engineer.

4.13. Attach a copy of all test results to this procedure at the conclusion of the FAT testing.

4.14. A closeout meeting shall be held at the conclusion of the testing and inspection to go over the punch list and open items. The punch list and open items shall be attached to the end of this procedure.

4.15. If a jumper is used to simulate relay output contact or any other contact closure, then it shall be fused.

4.16. If the building contains Switchgear or Medium Voltage Motor Control Centers that were assembled at the Supplier / OEM factory, then this procedure will be supplemented with the Switchgear and Medium Voltage MCC FAT procedure.

DRAFT

Kiewit

5. INSPECTIONS AND TESTS

5.1. VISUAL INSPECTIONS

The following checks include the visual inspection of the PDC exterior. Photograph the exterior of the PDC for documentation.

ITEM#	DESCRIPTION	ACCEPT	REJECT	REMARKS
5.1.1	Verify the general dimensions of the building match the dimensions shown on the approved drawings.			
5.1.2	Verify all wall and roof panels and frames appear straight and angles appear to match the layout and elevation design drawings.			
5.1.3	Verify that the PDC roof and guttering systems have been installed as shown on the approved drawings. Verify that all water intrusion flashing has been installed over equipment and access doors as shown on the approved drawings.			
5.1.4	Verify the exterior walls, roof, and base of the PDC are free of contamination, dents, or scratches. Verify the exterior painting of the building is complete as specified.			
5.1.5	Verify all building access doors are properly located. Verify the dimensions of all building access doors. Verify any windows are properly located on the doors and any signage on the door matches the approved drawings. (If signs are to be shipped loose and installed in the field, verify each sign is correct.)			
5.1.6	Verify all building exhaust hoods and vents are properly located, installed and sealed.			
5.1.7	Verify all conduit and piping penetrations for the building are properly located, sized and sealed. Verify conduits are installed with low point drains.			
5.1.8	Verify all miscellaneous penetrations are properly sized and located.			

DRAFT

Kiewit

5.1.9	Verify all exterior receptacles, switches, lights, photocells, and HVAC units are properly located and installed.			
5.1.10	Verify building external grounding provisions are provided as shown on the approved drawings. Verify there is no damage to the external area of the plate.			
5.1.11	Verify PDC base anchoring support points are properly located and lifting points are properly located.			
5.1.12	(If weatherproofing tests are not going to be performed at the FAT) Inspect the sealing of the building to ensure no seals are missing, or damaged.			

The following checks include the visual inspection of the interior of the PDC for appropriate equipment nameplates, safety labels, grounding connections, arrangement, and no undesirable material and/or tools have been inadvertently left inside the equipment.

ITEM#	DESCRIPTION	ACCEPT	REJECT	REMARKS
5.1.13	Verify the location of interior supports, columns and bracing against the building layout drawings.			
5.1.14	Verify the interior walls, ceiling, and floor of the PDC are free of contamination, dents, or scratches. Inspect the floor to verify it appears level and no bowing is present. Verify the interior painting of the building is complete as specified. If required, verify epoxy paint is properly applied.			
5.1.15	Verify the shipping split locations against the general arrangement drawings. Verify the gap in the floor, walls and ceiling are within tolerance. Verify that all wiring terminated in shipping split junction boxes is properly labeled.			

DRAFT

Kiewit

5.1.16	(If exterior grounding provisions are not designed) Verify building internal grounding provisions are installed as shown on the approved drawings. Verify there is no damage to the external area of the plate.			
5.1.17	Verify all equipment nameplates, tags, and any safety labels. Verify the equipment quantity / arrangement in the PDC is consistent with the general arrangement drawings. Verify each piece of equipment is not damaged. (Edit this list to match the design. Include all equipment to be verified. Individually check each piece of equipment listed.) A: Switchgear(s) B: Motor Control Center(s) C: Transformer(s), NGR(s) D: Battery Rack, Vents, Disconnects, Charger(s) E: UPS Equipment F: DCS Cabinet(s) G: Relay Panel(s) H: AC and DC Distribution Panel(s) I: Breaker Test Box(es) J: HVAC Unit(s) and Controller(s) K: Fire Alarm / Suppression Equipment L: Misc PDC Equipment / Safety Equipment M: Cable Trays N: Bus Ducts			
5.1.18	Verify the locations and installation of the lights and emergency lights within the PDC match the general arrangement drawings.			
5.1.19	Verify the location and dimensions of any vault access doors against the general arrangement drawings. Verify the orientation of the doors match the drawings.			

DRAFT

Kiewit

5.1.20	Verify the location, quantity, and dimensions of any cutouts in the floor for future equipment to be installed in the field.			
5.1.21	Verify the following including layout, arrangement and support of all conduit systems. A: Verify the conduits are supported with proper quantity of clamps and spacing. Verify supports are secured appropriately. B: Verify conduits are not loose, damaged or bent. C: Verify the conduit systems are the correct material. D: If required, verify the labeling or tagging of conduits. E: If required, verify seal off fittings have been provided on required conduits. F: Verify all conduit covers are provided. G: Verify conduits are not overfilled, or conduits that are installed for future wire pulls are not significantly filled. H: Verify the installation of flexible conduits where required and bonding.			
5.1.22	Verify the following including the layout, arrangement and support of all cable tray systems. A: Verify the cable trays are supported with proper spacing between supports. Verify the supports are secured appropriately. B: Verify the supports are properly aligned, and all cable tray accessories are present. C: Verify cable trays are damaged or bent. D: Verify the PDC tray systems for the correct material. E: If required, verify the labeling or tagging of all cable trays.			

DRAFT

Kiewit

	F: Inspect the ground bus along the cable tray is complete. Verify the installation matches design intent. G: Verify cable trays are not overfilled. Verify trays that are installed for future wire pulls have sufficient space.			
5.1.23	Verify the following including the layout, arrangement and support of all wire way systems. A: Verify wire ways are not loose, damaged or bent. B: Verify the PDC wire ways for the correct material. C: If required, verify any labeling or tagging of wire ways. D: Ground connections along wire ways are complete and correct. E: Verify wire ways are not overfilled. Verify wire ways that are installed for future pulls have sufficient space. F: Verify all wire way covers are provided.			
5.1.24	Verify the following including the layout, arrangement and support of all bus duct systems. A: Verify the bus ducts are supported with proper spacing between supports. Verify the supports are secured appropriately. B: Verify the supports are properly aligned, and all bus duct accessories are present. C: Verify bus ducts are not loose, damaged or bent. D: If required, verify the labeling or tagging of bus ducts. F: Ground connection for bus duct enclosure is complete and correct. G: Verify all bus duct covers are installed. H: Verify the phasing between pieces of equipment connected is correct.			

DRAFT

Kiewit

5.1.25	Verify the chargers and UPS are installed with vendor recommended free space on all sides.			
5.1.26	Verify the following including the layout, arrangement and support of the PDC battery rack. A: Verify all accessories and supports are in place and installed per the approved drawings. B: Verify the dimensions of the battery rack installation.			
5.1.27	Verify the battery containment installation is complete and sealed. Verify the battery room walls and floor is painted with acid resistance paint where required and as shown on the approved drawings.			
5.1.28	Verify the DC battery disconnect switch fuses are the correct rating.			
5.1.29	Verify that all equipment enclosures and raceway are adequately grounded and all power and safety grounds are connected to the PDC ground bus system. (Edit this list to match the design. Include all equipment to be verified. Individually check each piece of equipment listed.) A: Switchgear(s) B: Motor Control Center(s) C: Transformer(s), NGR(s) D: Battery Rack, Vents, Disconnects, Charger(s) E: UPS Equipment F: DCS Cabinet(s) G: Relay Panel(s) H: AC and DC Distribution Panel(s) I: Breaker Test Box(es) J: HVAC Unit(s) and Controller(s) K: Fire Alarm / Suppression L: Misc PDC Equipment M: Cable Tray(s)			

DRAFT

Kiewit

	N: Conduit Fitting(s)			
5.1.30	Verify the bend radius has not been exceeded on any installed 4/0 AWG or larger ground cables. Verify all ground bus standoff insulators are not damaged.			
5.1.31	Verify that all interior equipment is anchored correctly. If required, verify any equipment that requires dampening due to vibration has the appropriate accessories installed.			
5.1.32	Verify the AC Distribution Panel(s). (Copy / Paste one complete set of checks for each AC panel in the PDC.) A: Posted panel schedule agrees with the drawings. B: Panel circuit assignments agree with the drawings and posted panel schedule. C: Circuit breaker ratings agree with the drawings. D: Wire labels are provided and agree with panel schedule. E: Spare breakers and space for spare breakers are provided. F: Verify cable entries in the panels are properly sealed. G: Verify cables are not resting on or pressed against any sharp edges.			
5.1.33	Verify the DC Distribution Panel(s). (Copy / Paste one complete set of checks for each DC panel in the enclosure.) A: Posted panel schedule agrees with the drawings. B: Panel circuit assignments agree with the drawings and cable schedule. C: Circuit breaker ratings agree with the drawings. D: Wire labels are provided and agree with panel schedule.			

DRAFT

Kiewit

	E: Spare breakers and space for spare breakers are provided. F: Verify cable entries in the panels are properly sealed. G: Verify cables are not resting on or pressed against any sharp edges.			
5.1.34	Verify the listed equipment has sufficient space for any required field terminations. Verify any current cables installed in the PDC will not interfere with any required field terminations. A: Switchgear(s) B: Motor Control Center(s) C: Transformer(s) D: Charger(s) E: UPS Equipment F: DCS Cabinet(s) G: Relay Panel(s) H: AC and DC Distribution Panel(s) I: Misc PDC Equipment / Safety Equipment			
5.1.35	Verify Transformers and MCC's have the required free space on all sides recommended by the manufacturer.			

5.2. MECHANICAL TESTS

These tests include the checking of the physical integrity of the equipment in the PDC and the overall building for good quality. This will include the checking of equipment access doors for proper closing and opening, building entrance doors, and rack in rack out of the power circuit breakers for proper operation. These checks include checking the torque / torque marks on all substation assemblies such as bus ducts, ground bars, raceway bracing, etc.

ITEM#	DESCRIPTION	ACCEPT	REJECT	REMARKS
5.2.1	Open and close the building entrance exterior access doors. A: Door alignment mechanisms operate smoothly.			

DRAFT

Kiewit

	B: Door stops are installed correctly and allow propping the door open. C: Door gaskets and seals are properly installed. D: Door closes properly without any gaps. E: There are no obstructions in front of the door. F: Verify panic bars operate smoothly. G: Verify the swing radius.			
5.2.2	Open and close the PDC equipment exterior access doors. A: Door alignment mechanisms operate smoothly. B: Door stops are installed correctly and allow propping the door open. C: Door gaskets and seals are properly installed. D: Door closes properly without any gaps. E: There are no obstructions in front of the door. F: Verify the swing radius.			
5.2.3	Open and close the PDC vault access doors. A: Door alignment mechanisms operate smoothly. Door opens in the correct direction. B: Door props are installed correctly and allow holding the door open. C: Door closes properly without any gaps. D: There are no obstructions in front of the door and access in and out of the vault is unobstructed. E: Verify the swing radius.			
5.2.4	Open and close all interior equipment enclosure access doors both front and rear. A: Door alignment mechanisms operate smoothly. B: Door stops are installed correctly and allow propping the door open. C: Door gaskets and seals are properly installed. D: Door closes properly without any gaps. E: There are no obstructions in front of the door. F: Verify the swing radius.			

DRAFT

Kiewit

5.2.5	Rack in and rack out MV Switchgear Main and Tie circuit breakers as well as at a minimum two randomly selected feeder breakers. Breakers should include top and bottoms sections, middle and opposite ends of each lineup. Racking operations should be performed with the equipment doors closed. A: Breakers are able to be racked out of their cubicles without obstruction. B: Breaker visual indication properly indicates the change from connected to disconnected positions. C: Breakers can be pulled out of their cubicles from the disconnected position without obstruction. B: Breakers are able to be racked back into their cubicles without obstruction.			
5.2.6	Check any key interlocks provided with equipment for proper locking and unlocking operations. Verify only one key works with individual locks.			
5.2.7	Weatherproofing tests on enclosure. Rain tests are to be performed on the enclosure per the contract specifications. Procedures that will be used for this test as well as the results are appended to this report. Verify the following after the rain test has been performed. A: No water on primary or secondary insulation. B: No water on any electrical components or mechanisms of the assembly. C: No significant accumulation of water retained by the structure or other non-insulating parts.			

DRAFT

5.3. ELECTRICAL TESTS

These tests involve the verification of cable continuity, polarity, and verification of the interconnection wiring between the equipment inside the building. For the tests to be successful the interconnection wiring is to match the latest vendor circuit schedule prepared prior to the FAT. The

Kiewit

cables are to be traced from the origin to the termination point. The cable ID in the circuit schedule will be marked if the wire size/type agrees and the point to point terminations agree with what is installed. Any deviation from the latest vendor circuit schedule will be noted and need to be approved.

ITEM#	DESCRIPTION	ACCEPT	REJECT	REMARKS
5.3.1	Circuit continuity and insulation resistance tests. Verify the results for the continuity, insulation resistance, and polarity test results for all cables in the vendor circuit schedule provided by factory quality documentation. Procedures that will be used for these tests as well as the results are appended to this report. NOTE: any cables that are on the PDC circuit schedule that are missing test results will be verified / witnessed during the FAT.			
5.3.2	Check power cables that are interconnecting between pieces of equipment within the enclosure. Record any exceptions to the latest vendor circuit schedule that are acceptable. Results for this check are appended to this report. A: Wire tags are provided per the specifications and agree with the design drawings and vendor circuit schedule. B: Cable type and size agree with specifications. C: Cable terminations and phasing match design drawings and vendor circuit schedule. D: Cables are properly routed and supported. Cable bend radius has not been exceeded. E: Installation does not interfere with future pulls in the field.			
5.3.3	Check the continuity of control and indication cables that are interconnecting between pieces of equipment within the enclosure. Record any exceptions to the latest vendor circuit schedule			

DRAFT

Kiewit

	that are acceptable. Results for this check are appended to this report. A: Wire tags are provided per the specifications and agree with the design drawings and vendor circuit schedule. B: Cable type and size agree with specifications. C: Cable terminations match design drawings and vendor circuit schedule. D: Cables are properly routed and supported.			
5.3.4	Verify any splices done in the factory have been torqued and torque marked to indicate.			
5.3.5	Verify all connections for equipment with in a shipping split are torqued and torque marked to indicate.			

5.4. FUNCTIONAL TESTS

Perform functional and operational tests to verify that all equipment level inputs and outputs function in accordance with the approved schematics and elementary diagrams. For these tests, the control functions are to be checked by actuating each contact that initiates a control operation, and then following the sequence through various devices to verify that the correct results are obtained for each condition. The actuating of contacts, as required to initiate an operation, are performed by simulation. Tests shall be simulated by manipulation, contact blocking, contact jumping, or digital signal generation. In order to complete the following tests, control voltage will need to be supplied to the electrical equipment, as well as temporary power for lighting and HVAC units.

SCOPE OF FUNCTIONAL TESTS (Copy and Paste the appropriate tests required)

Instructions: Functional tests internal to the individual pieces of electrical equipment may have been completed at the original equipment manufacturer's FAT. In these cases, the Functional Tests listed in that equipment's separate FAT procedure will not be repeated during the PDC FAT. It is assumed they were completed and documented previously. Only the verification of inputs and outputs between devices that were installed by the PDC manufacturer will be required. In the event that punch list items exist from previously tested equipment, or major revisions to the equipment design occurred after the equipment was originally tested, then those functional tests will be verified at the PDC FAT. However, the specific tests will still be documented in a separate equipment procedure that can be attached to this document.

DRAFT

Kiewit

If equipment is assembled in the PDC and was not tested previously, then the FAT procedure for the individual pieces of equipment will need to be completed in addition to this procedure at the PDC FAT. This procedure will not cover the internal functional tests required for that specific equipment. For this procedure, the extent of the scope of functional testing will primarily depend on the installation and wiring of the DCS and or relay panels. Therefore, the functional testing section will be split into three major areas listed below, the sections that do not apply can be either crossed out or marked NA:

1. DCS Cabinets and/ or Relay Panels are installed and wired at the PDC manufacturer.
2. PDC is equipped with SMART communication devices and the end user can be simulated at the PDC factory.
3. DCS cabinets or relay panels have not been installed or wired at the PDC manufacturer.

1. DCS Cabinets and / or Relay Panels installed and wired in PDC

Switchgear Functional Tests (Copy and paste for each SWGR to be tested)

ITEM#	DESCRIPTION	ACCEPT	REJECT	REMARKS
5.4.1	Verify the breakers TOC contacts, by jumping and checking continuity, indicate the correct breaker positions going to the correct DCS addresses.			
5.4.2	Verify breakers close and trip commands from the correct DCS addresses.			
5.4.3	Verify breakers close and trip indications to the DCS are going to the correct addresses.			
5.4.4	Verify breakers close and trip commands coming from any installed remote control panels in the PDC.			
5.4.5	Verify breakers close and trip indications going to any installed remote control panels in the PDC.			
5.4.6	Verify all breaker trips and block closing operations from the protective relays in installed remote relay panels.			
5.4.7	Verify all breakers trip and block closing operation from the lockout relays in any installed remote panels.			

DRAFT

Kiewit

5.4.8	Verify the breaker trip coil monitoring alarms going to the correct DCS address.			
5.4.9	Verify the lockout tripped and trip coil monitoring alarms are going to the correct DCS address.			
5.4.10	If Switchgear is equipped with a remote transfer control panel then functionally verify all transfer options.			
5.4.11	Verify all trouble alarms from the Switchgear to the DCS are going to the correct DCS input card.			
5.4.12	Verify all maintenance switch indications going to other devices or panels are wired correctly.			
5.4.13	Verify any trips or indications going between multiple Switchgears within the PDC that were wired by the PDC Manufacturer.			

MCC Functional Tests (Copy and paste for each MCC to be tested)

ITEM#	DESCRIPTION	ACCEPT	REJECT	REMARKS
5.4.14	Verify the contactors TOC contacts indicate the correct contactor positions going to the correct DCS addresses.			
5.4.15	Verify contactors close and trip commands from the correct DCS addresses.			
5.4.16	Verify contactors close and trip indications to the DCS are going to the correct addresses.			
5.4.17	Verify the contactor trip coil monitoring alarms going to the correct DCS address.			
5.4.18	Verify local lockout tripped and trip coil monitoring alarms are going to the correct DCS address.			
5.4.19	Verify all trouble alarms from the MCC to the DCS are going to the correct DCS input card.			
5.4.20	Verify all maintenance switch indications going to other devices or panels are wired correctly.			

DRAFT

Kiewit

5.4.21	Verify any Trips or indications going between MCCs and Switchgears within the PDC that were wired by the PDC Manufacturer.			

PDC Transformer and Neutral Grounding Resistor Functional Tests (Copy and paste for each XFMR / NGR to be tested)

ITEM#	DESCRIPTION	ACCEPT	REJECT	REMARKS
5.4.22	Verify any trips going from the transformer temperature monitor to any breakers.			
5.4.23	Verify the alarms coming from the transformer temperature monitor are going to the correct address in the DCS.			
5.4.24	Verify any alarms or indications coming from the transformer NGR to the DCS are wired correctly.			

Battery Ventilation System and Battery Charger Functional Tests (Copy and paste the checks for each Battery Charger to be tested)

ITEM#	DESCRIPTION	ACCEPT	REJECT	REMARKS
5.4.25	Functionally verify any local control panels that are being used for the battery room ventilation.			
5.4.26	Verify the wiring of any alarms or indications going from the hydrogen monitor and or vent fans to the correct DCS point.			
5.4.27	Verify the wiring of any alarms or indications coming from the battery chargers are going to the correct address in the DCS.			

UPS Power System Functional Tests (Copy and paste for each UPS to be tested)

ITEM#	DESCRIPTION	ACCEPT	REJECT	REMARKS

Kiewit

5.4.30	Verify the wiring of any alarms or indications going from the UPS System to the correct DCS point.			

Relay Panel Functional Tests (Copy and paste for each Relay Panel to be tested)

ITEM#	DESCRIPTION	ACCEPT	REJECT	REMARKS
5.4.31	Verify the wiring of any alarms or indications going from the Relay Panel(s) to the correct DCS point.			

AC and DC Power Panel Functional Tests (Copy and paste for Power Panels that apply)

ITEM#	DESCRIPTION	ACCEPT	REJECT	REMARKS
5.4.32	Verify the wiring of any alarms or indications going from the Power Panel(s) to the correct DCS point.			

HVAC Units and Controllers Functional Tests (Copy and paste for all HVAC Units and controllers to be tested)

ITEM#	DESCRIPTION	ACCEPT	REJECT	REMARKS
5.4.33	Functionally verify any local control panels that are being used for the HVAC in the PDC.			
5.4.34	Verify the wiring of any alarms or indications going from the HVAC Units to the correct DCS point.			
5.4.35	Verify the wiring of any alarms or indications coming from the HVAC Controller is going to the correct address in the DCS.			
5.4.36	Verify the operation of the HVAC from the controller by either manipulating the controller set points or temperature sensor.			

Fire Alarm / Suppression Functional Tests (Copy and paste for Fire Alarm Panels that apply)

Kiewit

ITEM#	DESCRIPTION	ACCEPT	REJECT	REMARKS
5.4.37	Verify the wiring of any alarms or indications coming from the Fire Alarm is going to the correct address in the DCS.			
5.4.38	Verify, if any, the wiring of alarms or trips between the Fire Alarm panel and HVAC controller.			

Lighting Contactors, Switches, and circuits (Copy and paste for equipment that apply)

ITEM#	DESCRIPTION	ACCEPT	REJECT	REMARKS
5.4.39	Verify the wiring of internal wall switches.			
5.4.40	Verify HOA switch functions correctly with external lighting.			
5.4.41	Verify operation of Emergency lighting.			

Breaker Test Cabinets (Copy and paste for equipment that apply)

ITEM#	DESCRIPTION	ACCEPT	REJECT	REMARKS
5.4.42	Verify there is sufficient access from the breaker cubicle to the test cabinet.			
5.4.43	Verify the operation of the breaker test cabinet close and open test switch with at least one breaker.			

Misc. PDC Equipment Functional Tests (Copy and paste for any equipment not mentioned above with interconnecting wiring in the PDC that apply)

ITEM#	DESCRIPTION	ACCEPT	REJECT	REMARKS
5.4.44	Verify the wiring of any alarms or indications coming from Equipment going to the correct address in the DCS.			

Kiewit

5.4.45	Verify the wiring of alarms or trips between equipment in the PDC.			

2. PDC is equipped with SMART communication devices and the end user can be simulated at the PDC factory.

Perform functional and operational tests to verify that all equipment level inputs and outputs function in accordance with the approved schematics and elementary diagrams. For these tests, the control functions are to be checked by actuating each contact that initiates a control operation, and then following the sequence through various devices to verify that the correct results are obtained for each condition. The actuating of contacts, as required to initiate an operation, are performed by simulation. Tests shall be simulated by manipulation, contact blocking, contact jumping, or digital signal generation. In order to complete the following tests, control voltage will need to be supplied to the electrical equipment, as well as temporary power for lighting and HVAC units.

For all equipment equipped with SMART communication devices the end user will verify the correct bits or words are being manipulated for the correct operation. If the DCS cabinets are not installed, or the communication cannot be verified within the DCS cabinets, then the end user will connect as far from the device under test as possible to verify as much communication wiring as possible. The functional tests for all DCS indications and commands can only be marked acceptable if the equipment properly communicates the intended information to the end user and the end user can properly control the equipment under test. In addition to digital functions, analog signals can also be simulated in order to verify voltage, current, and power signals are correctly communicated to the end user.

Switchgear Functional Tests (Copy and paste for each SWGR to be tested)

ITEM#	DESCRIPTION	ACCEPT	REJECT	REMARKS
5.4.46	Verify the breakers TOC contacts, by jumping and checking continuity, indicate the correct breaker positions going to the correct DCS addresses.			
5.4.47	Verify breakers close and trip commands from the correct DCS addresses.			
5.4.48	Verify breakers close and trip indications to the DCS are going to the correct addresses.			
5.4.49	Verify breakers close and trip commands coming from any installed remote control panels in the PDC.			

Kiewit

5.4.50	Verify breakers close and trip indications going to any installed remote control panels in the PDC.			
5.4.51	Verify all breaker trips and block closing operations from the protective relays in installed remote relay panels.			
5.4.52	Verify all breakers trip and block closing operation from the lockout relays in any installed remote panels.			
5.4.53	Verify the breaker trip coil monitoring alarms going to the correct DCS address.			
5.4.54	Verify the lockout tripped and trip coil monitoring alarms are going to the correct DCS address.			
5.4.55	If Switchgear is equipped with a remote transfer control panel then functionally verify all transfer options.			
5.4.56	Verify all trouble alarms from the Switchgear to the DCS are going to the correct DCS address.			
5.4.57	Verify all maintenance switch indications going to other devices or panels are wired correctly.			
5.4.58	Verify any trips or indications going between multiple Switchgears within the PDC that were wired by the PDC Manufacturer.			
5.4.59	Verify analog voltage values are displayed at the correct DCS address by LV injection. Verify DCS scaled values are correct.			
5.4.60	Verify analog current values are correctly displayed at the correct DCS address by secondary current injection. Verify DCS scaled values are correct.			
5.4.61	Verify analog power values are correctly displayed at the correct DCS address by secondary current and voltage injection. Verify DCS scaled values are correct. Verify positive and negative values are correctly displayed.			

DRAFT

Kiewit

MCC Functional Tests (Copy and paste for each MCC to be tested)

ITEM#	DESCRIPTION	ACCEPT	REJECT	REMARKS
5.4.62	Verify the contactors TOC contacts indicate the correct contactor positions going to the correct DCS addresses.			
5.4.63	Verify contactors close and trip commands from the correct DCS addresses.			
5.4.64	Verify contactors close and trip indications to the DCS are going to the correct addresses.			
5.4.65	Verify the contactor trip coil monitoring alarms going to the correct DCS address.			
5.4.66	Verify local lockout tripped and trip coil monitoring alarms are going to the correct DCS address.			
5.4.67	Verify all trouble alarms from the MCC to the DCS are going to the correct DCS input card.			
5.4.68	Verify all maintenance switch indications going to other devices or panels are wired correctly.			
5.4.69	Verify any Trips or indications going between MCCs and Switchgears within the PDC that were wired by the PDC Manufacturer.			

PDC Transformer and Neutral Grounding Resistor Functional Tests (Copy and paste for each XFMR / NGR to be tested)

ITEM#	DESCRIPTION	ACCEPT	REJECT	REMARKS
5.4.70	Verify any trips going from the transformer temperature monitor to any breakers.			
5.4.71	Verify the alarms coming from the transformer temperature monitor are going to the correct address in the DCS.			
5.4.72	Verify any alarms or indications coming from the transformer NGR to the DCS are wired correctly.			

Kiewit

Battery Ventilation System and Battery Charger Functional Tests (Copy and paste the checks for each Battery Charger to be tested)

ITEM#	DESCRIPTION	ACCEPT	REJECT	REMARKS
5.4.29	Functionally verify any local control panels that are being used for the battery room ventilation.			
5.4.30	Verify the wiring of any alarms or indications going from the hydrogen monitor to the correct DCS point.			
5.4.31	Verify the wiring of any alarms or indications coming from the battery chargers are going to the correct address in the DCS.			

UPS Power System Functional Tests (Copy and paste for each UPS to be tested)

ITEM#	DESCRIPTION	ACCEPT	REJECT	REMARKS
5.4.32	Verify the wiring of any alarms or indications going from the UPS System to the correct DCS point.			

Relay Panel Functional Tests (Copy and paste for each Relay Panel to be tested)

ITEM#	DESCRIPTION	ACCEPT	REJECT	REMARKS
5.4.33	Verify the wiring of any alarms or indications going from the Relay Panel(s) to the correct DCS point.			

AC and DC Power Panel Functional Tests (Copy and paste for Power Panels that apply)

ITEM#	DESCRIPTION	ACCEPT	REJECT	REMARKS
5.4.34	Verify the wiring of any alarms or indications going from the Power Panel(s) to the correct DCS point.			

HVAC Units and Controllers Functional Tests (Copy and paste for all HVAC Units and controllers to be tested)

Kiewit

ITEM#	DESCRIPTION	ACCEPT	REJECT	REMARKS
5.4.35	Functionally verify any local control panels that are being used for the HVAC in the PDC.			
5.4.36	Verify the wiring of any alarms or indications going from the HVAC Units to the correct DCS point.			
5.4.37	Verify the wiring of any alarms or indications coming from the HVAC Controller is going to the correct address in the DCS.			
5.4.38	Verify the operation of the HVAC from the controller by either manipulating the controller set points or temperature sensor.			

Fire Alarm / Suppression Functional Tests (Copy and paste for Fire Alarm Panels that apply)

ITEM#	DESCRIPTION	ACCEPT	REJECT	REMARKS
5.4.39	Verify the wiring of any alarms or indications coming from the Fire Alarm is going to the correct address in the DCS.			
5.4.40	Verify, if any, the wiring of alarms or trips between the Fire Alarm panel and HVAC controller.			

Lighting Contactors, Switches, and circuits (Copy and paste for equipment that apply)

ITEM#	DESCRIPTION	ACCEPT	REJECT	REMARKS
5.4.41	Verify the wiring of internal wall switches.			
5.4.42	Verify HOA switch functions correctly with external lighting.			
5.4.43	Verify operation of Emergency lighting.			

Breaker Test Cabinets (Copy and paste for equipment that apply)

DRAFT

Kiewit

ITEM#	DESCRIPTION	ACCEPT	REJECT	REMARKS
5.4.44	Verify there is sufficient access from the breaker cubicle to the test cabinet.			
5.4.45	Verify the operation of the breaker test cabinet close and open test switch with at least one breaker.			

Misc. PDC Equipment Functional Tests (Copy and paste for any equipment not mentioned above with interconnecting wiring in the PDC that apply)

ITEM#	DESCRIPTION	ACCEPT	REJECT	REMARKS
5.4.46	Verify the wiring of any alarms or indications coming from Equip going to the correct address in the DCS.			
5.4.47	Verify the wiring of alarms or trips between equipment in the PDC.			

3. DCS Cabinets and Relay Panels have not been installed or wired at the PDC manufacturer.

Perform functional and operational tests to verify that all equipment level inputs and outputs function in accordance with the approved schematics and elementary diagrams. For these tests, the control functions are to be checked by actuating each contact that initiates a control operation, and then following the sequence through various devices to verify that the correct results are obtained for each condition. The actuating of contacts, as required to initiate an operation, are performed by simulation. Tests shall be simulated by manipulation, contact blocking, contact jumping, or digital signal generation. In order to complete the following tests, control voltage will need to be supplied to the electrical equipment, as well as temporary power for lighting and HVAC units.

Switchgear Functional Tests (Copy and paste for each SWGR to be tested)

ITEM#	DESCRIPTION	ACCEPT	REJECT	REMARKS
5.4.48	Verify breakers close and trip commands coming from any installed remote control panels in the PDC.			

Kiewit

5.4.49	Verify breakers close and trip indications going to any installed remote control panels in the PDC.			
5.4.50	If Switchgear is equipped with a remote transfer control panel then functionally verify all transfer options.			
5.4.51	Verify all maintenance switch indications going to other devices or panels are wired correctly.			
5.4.52	Verify any trips or indications going between multiple Switchgears within the PDC that were wired by the PDC Manufacturer.			

MCC Functional Tests (Copy and paste for each MCC to be tested)

ITEM#	DESCRIPTION	ACCEPT	REJECT	REMARKS
5.4.53	Verify all maintenance switch indications going to other devices or panels are wired correctly.			
5.4.54	Verify any Trips or indications going between MCCs and Switchgears within the PDC that were wired by the PDC Manufacturer.			

PDC Transformer and Neutral Grounding Resistor Functional Tests (Copy and paste for each XFMR / NGR to be tested)

ITEM#	DESCRIPTION	ACCEPT	REJECT	REMARKS
5.4.55	Verify any trips going from the transformer temperature monitor to any breakers.			

Battery Ventilation System and Battery Charger Functional Tests (Copy and paste the checks for each Battery Charger to be tested)

ITEM#	DESCRIPTION	ACCEPT	REJECT	REMARKS
5.4.56	Functionally verify any local control panels that are being used for the battery room ventilation.			

Kiewit

HVAC Units and Controllers Functional Tests (Copy and paste for all HVAC Units and controllers to be tested)

ITEM#	DESCRIPTION	ACCEPT	REJECT	REMARKS
5.4.57	Functionally verify any local control panels that are being used for the HVAC in the PDC.			
5.4.58	Verify the operation of the HVAC from the controller by either manipulating the controller set points or temperature sensor.			

Fire Alarm / Suppression Functional Tests (Copy and paste for Fire Alarm Panels that apply)

ITEM#	DESCRIPTION	ACCEPT	REJECT	REMARKS
5.4.59	Verify, if any, the wiring of alarms or trips between the Fire Alarm panel and HVAC controller.			

Lighting Contactors, Switches, and circuits (Copy and paste for equipment that apply)

ITEM#	DESCRIPTION	ACCEPT	REJECT	REMARKS
5.4.60	Verify the wiring of internal wall switches.			
5.4.61	Verify HOA switch functions correctly with external lighting.			
5.4.62	Verify operation of Emergency lighting.			

Breaker Test Cabinets (Copy and paste for equipment that apply)

ITEM#	DESCRIPTION	ACCEPT	REJECT	REMARKS
5.4.63	Verify there is sufficient access from the breaker cubicle to the test cabinet.			

Kiewit

5.4.64	Verify the operation of the breaker test cabinet close and open test switch with at least one breaker.			

Misc. PDC Equipment Functional Tests (Copy and paste for any equipment not mentioned above with interconnecting wiring in the PDC that apply)

ITEM#	DESCRIPTION	ACCEPT	REJECT	REMARKS
5.4.65	Verify the wiring of alarms or trips between equipment in the PDC.			

DRAFT

Kiewit

6. **PUNCH LIST (ATTACHED)**

DRAFT

Kiewit

7. **ACKNOWLEDGMENT OF FACTORY ACCEPTANCE TEST COMPLETION:**

FACTORY ACCEPTANCE TEST INSPECTORS

Name	Title	Signature	Date

DRAFT

Appendix NN

OSBL Substation Circuit Breakers Specification

SPECIFICATIONS FOR SUBSTATION CIRCUIT BREAKERS

94.03.26.175

GE / SOUTHERN / LINDE ADVANCED NGCC

KIEWIT PROJECT NO. 20041223

ISSUED: APRIL 28, 2023

REVISION 0 – ISSUED FOR FEED

TECHNICAL SPECIFICATIONS

TABLE OF CONTENTS

TITLE		Pages	Revision
1B	Section 1B	1B-1 – 1B-5	0
1E	High Voltage Circuit Breakers Specification	1E-1 – 1E-2	0
TECHNICAL REQUIREMENTS			
APPENDIX A	Substation Drawings	2 pages	0
GENERAL REQUIREMENTS			
E1	Motors-Induction Squirrel Cage Type	E1-1 – E1-20	
E2	Seller Furnished Controls and Wiring	E2-1 – E2-12	
I1	Seller Furnished Programmable Logic Controllers	I1-1 – I1-6	
I3	Cybersecurity Requirements	I3-1 – I3-12	
	Cyber Assets Log	3 pages	
	White Listed Ports and Services Log	1 page	
	Technical Feasibility Exception (TFE) Template	4 pages	
S1	Structural Loading and Design	S1-1 – S1-10	
S2	Structural Steel Fabrication and Supply	S2-1 – S2-18	

ESTIMATING SECTION 1B

1. SITE DESIGN CONDITIONS: The Site conditions to be used as design and performance criteria are as follows:

   - Main Plant Finish Grade Elevation (Mean Sea Level) : 23 feet
   - Barometric pressure: 14.7 psia
   - High Ambient Temperature: 105 ° F
   - Low Ambient Temperature: 0 ° F
   - Temperature; Indoor Ambient (Dry Bulb)
     Occupied areas (Air Conditioned) 65 ° F to 75 ° F
     Non-occupied areas (Ventilated and Heated only) 40 ° F to 100 ° F

2. UTILITIES FOR COOLED EQUIPMENT:

   - Instrument Air Pressure Range: 60 – 120 psig
   - Design temperature for air cooled equipment: 105 ° F
   - Design cooling water inlet temperature for water-cooled equipment: 86 ° F
   - Cooling Water Composition 0% propylene glycol/100% water
   - Cooling Water Design Pressure 150 psig
   - Cooling Water Pressure Drop/Temperature Rise (NTE): 10psi /20 ° F

3. STRUCTURAL:

   - Precipitation: Average rainfall: 64 inches/year
   - Design 24 hour Storm Event 25 year / 100 year: 10.3 inches / 14.0 inches
   - Design Snow Loading: 0 psf ground / 0 psf roof (ASCE 7-16)
   - Minimum Design Basic Wind Speed: 153 mph (ASCE 7-16 – Risk Category III)
   - Design Wind Load and importance factor: I_w=1.00 (ASCE 7-16)
   - Exposure: C

ESTIMATING SECTION 1B

- Seismic Loading: Seismic Importance Factor I=1.25
  Occupancy / Risk Category III
  Site Class D
  Spectral Response Accelerations S_S=0.095 g, S_1=0.059 g
  Site coefficients F_a=1.6 and F_v=2.4
  Spectral Response Coefficients S_{DS}=0.109 g, S_{D1}=0.102 g
  Seismic Design Category B
  ATC Hazards by Location (ASCE 7-16)
- Winter Design: Freeze Protection is required; Frost depth = 12”
- Design life of the Facility: 30 years

4. NOISE CONTROL:

   Near Field: The A-weighted sound pressure level resulting from the operation of equipment furnished under these specifications (including drive motors) shall not exceed a free-field average (per piece of equipment) of 85 dBA along the equipment envelope at a height of 5 feet (1.5 meters) above the ground and personnel platforms. The equipment envelope is the perimeter line that completely encompasses the equipment package (including noise control devices) at a distance of 3 feet (1 meter) from the equipment face.

   Far Field: The A-weighted sound pressure level (dBA) at 400 ft from the emission source should be provided for EPC to evaluate the overall plant noise level at the plant boundary.

5. SITE ACCESS:

   The jobsite is located at Plant Barry in Bucks, Alabama. The jobsite can be accessed from the following:

   Road: The site is accessible from Highway 43

   Rail: No site rail access.

   Barge: Barge can be transported via the Mobile River through the Mobile Bay.

6. ADDITIONAL SITE CONSIDERATIONS:

7. GENERAL DESIGN REQUIREMENTS:
   a. Asbestos-containing materials will not be allowed.

ESTIMATING SECTION 1B

b. Only proven and tested technology fo the same model or nominal size and design conditions and in successful operation for at least five years in the exact same application shall be provided. There shall be no exception to this clause.

c. For projects located in Canada, CRN certification and local province requirements shall be incorporated into the equipment and pressure piping system design.

d. Mandatory Construction and Commissioning: One complete set of parts indicated in the Seller's documentation requiring to be replaced during the Construction, Testing or Startup phases of the Project (Mandatory Construction and Commissioning Parts) shall be included in the Seller's scope. For example, manway gaskets, hydro kit gaskets, or other that are routinely replaced after inspections and tests.

e. Pump Designs:Shut-off head at design speed shall be between 115 and 140% of the maximum total dynamic head (excluding circulating water pumps).

f. All rotating components and assemblies shall be dynamically balanced in accordance with Table 1 of ISO 1940.

g. Piping Design:
   i. Unless otherwise indicated in this specification, the minimum carbon steel piping schedule for NPS 2-1/2" and larger is STD, for 2" and smaller is Schedule 80.
   ii. Unless otherwise indicated in this specification, the minimum stainless steel piping schedule for NPS 2-1/2" and larger is 10S, for 2" and smaller is Schedule 40S.
   iii. Minimum allowable resultant force at each equipment nozzle shall be 250 lbs per nominal pipe size (NPS), and the minimum allowable resultant moment at each equipment nozzle shall be 500 ft-lbs per NPS. For instance, a 4 inch nozzle shall be designed for minimum 1,000 lbs resultant force and 2,000 ft-lbs resultant moment.
   iv. For skidded and Seller provided piping, high point vents and low point drains shall be provided. Vents and drains shall normally be isolated with globe valves and gate valves respectively, in liquid service. Ball valves shall be provided for vents & drains in natural gas and air services.
   v. Corrosion Allowance: Pipe wall thickness shall be calculated using the following corrosion allowances:
      - Carbon & Low/Intermediate Alloy Steels: 0.020"
      - Creep Strength Enhanced Ferritic (CSEF) Steels – 0.060"
      - Stainless Steel and Nickel Alloys : 0.000"
   vi. Steel flanges 2-1/2 inch and larger except for grooved pipe shall be weld neck, slip-on type is permitted for class 150 only, and all steel flanges 2 inch and smaller shall be of the socket type.
   vii. Fittings for tubing shall be flareless compression type, Swagelok or Parker Type 316 stainless steel.

ESTIMATING SECTION 1B

viii. All vent and drain islolation valves and instrument root valves rated ASME Class 900 or greater shall utilize double block root valves.
ix. Valve Actuators: Gear actuators shall be used on all valve sizes greater than 6 inch, and on any valve requiring more than 75 pounds rim pull to operate the valve at the maximum differential pressure.
x. All valve bonnets for valves with design temperatures of 150F or higher shall be provided with bonnet over pressure protection.

h. Approved Vendors:
i. Steel body gate, globe, angle, and check valves shall be manufactured by Velan, Crane, Pacific Valves, Anderson Greenwood-Crosby, Edward Vogt, SPX Corporation, Fisher Controls International, or Dresser, Inc.
ii. Butterfly valves shall be manufactured by Bray, Crane, Xomox, Ebro, Amri, or Centerline.
iii. Control valves shall be manufacturered by Fisher, Valtek, Leslie, Koso, or CCI.
iv. Coupling shall be of the flexible spacer type by Falk, Zurn, or engineer approved equal.
v. Instruments shall be manufacturered by:
- Transmitters: Rosemount, Foxboro
- Level Gauges: Jerguson
- Pressure Gauges, Temperature Switches: Ashcroft
- Temperature Gauges: Ashcroft EI case style
- Pressure and Differential Pressure Switches: Ashcroft, Merriam, Midwest
- Level Switches: Magnetrol, SOR, Jerguson/Magne-Sonics
- Solenoid Valves: ASCO
- Critical Service Flow Elements:, Triad, Fluidic Technologies, PFS
- Non-Critical Service Flow Elements: Dietrich Standard, Deltabar/Midwest Instruments, Veris
- Heated Instrument Enclosure: O'Brien

i. General Weld Requirements:
- Structural steel welding shall be in accordance with the applicable AWS welding code.
- Welding of fluid-conveying, non-structural steel, piping and pressure-containing materials shall be in accordance with ASME BPVC Section IX.

8. Quality and Examination Requirements:
a. Seller and Seller's sub-suppliers shall have a Quality Management System, approved by the buyer, in accordance with ISO9001. The Seller shall provide transparent supply chain integrity for the material sources.

b. Records in accordance to referenced code shall be maintained and available for submittal to the Buyer upon request. These records include but are not limited to:
i. Material Test Reports (MTR) of base and welding materials
ii. Welding Procedure Specification (WPS) and supporting Procedure Qualification Record (PQR)

ESTIMATING SECTION 1B

iii. Heat Treatment Records
iv. Final Non Destructive Examination (NDE) reports
v. Repair records
vi. Personnel qualification records
vii. Nonconformance reports
viii. Manufacture's Data Reports (MDR)

END OF SECTION

Project: GE/Southern/Linde Advanced NGCC Integration
#: 20041223
Prepared by: Nick Mechler

1E - SPECIFICATION
HIGH VOLTAGE CIRCUIT BREAKERS

Specification Summary			
This specification covers the design of High Voltage Circuit Breakers in accordance with this specification and referenced Standards.			
Item	**Description**	**Specified Data**	**By Bidder**
		Breaker Type 1	
1	**General Requirements**		
1.01	Quantity	1	
1.02	Manufacturer		X
1.03	Model		X
1.04	Nominal System Voltage	230kV	
1.05	Rated Maximum System Voltage	245	
1.06	Is Breaker Adjacent to a Line?	See One-Lines and Layout	
1.07	Is Breaker Adjacent to a Transformer?	See One-Lines and Layout	
1.08	Is Breaker Utilized in a Generator Syncing Application?	No	
1.09	Arc Quenching Medium	SF6	
1.10	Tank Design	Dead Tank	
1.11	Frequency	60Hz	
1.12	Phases Per Unit	3	
1.13	Operating Mechanism		X
1.14	Gang or Independent Pole Operation	Gang Operated	
1.15	Number of Trip Coils	2	
1.16	Rated Continuous Current	1200A	
1.17	Rated Short-Circuit Current (Symmetrical 1/2 Cycle)	63kA	
1.18	Maximum Rated Interrupting Time	3 Cycles	
1.19	Basic Insulation Level	1050kV	
1.20	Bushing/Insulator Material	Porcelain / Polymer Composite	
1.21	Bushing/Insulator Creepage Distance	1 inch / kV (Heavy Pollution)	
1.22	Breaker Frame Type	Common	
1.23	Plug, Interphase Cables for Segregated Frame Breakers	N/A	
1.24	Current Transformer 1st Set	1200:5 SR, 0.3B1.8, TRF=2.0	
1.25	Current Transformer 2nd Set	1200:5 MR, C800, TRF=2.0	
1.26	Current Transformer 3rd Set	1200:5 MR, C800, TRF=2.0	
1.27	Current Transformer 4th Set	1200:5 MR, C800, TRF=2.0	
1.28	Current Transformer 5th Set	1200:5 MR, C800, TRF=2.0	
1.29	Current Transformer 6th Set	1200:5 MR, C800, TRF=2.0	
1.30	Cabinet NEMA Rating	3R	
1.31	Auxiliary Contacts	10 Spare "A" & 10 Spare "B"	
1.32	Rated Control Voltage	125VDC	
1.33	Rated Trip / Close Voltage	125VDC	
1.34	Rated Motor Voltage	120VAC 1P / 125VDC	
1.35	Electric Tank Heater Voltage	120VAC 1P or 480VAC 3P or N/A	
1.36	Cabinet Lighting and 120VAC GFCI Receptacle	Included	
1.37	Rated Cabinet Heater Voltage	240VAC 1P	
1.38	Remote I/O and Control	Included	
1.39	Local/Remote Switch	Included	
1.40	Loss of DC Control Voltage Alarm	Included	
1.41	Loss of AC Control Voltage Alarm	Included	
1.42	Trip Coil Failure Alarm	Included	
1.43	Low Gas Pressure Alarm	Included	
1.44	Low-Low Gas Pressure Alarm	Included	
1.45	Low Spring Tension or Failure Alarm	As Applicable	
1.46	Loss of Tank Heater AC Power Alarm	As Applicable	
1.47	Tank Heaters Energized Signal	As Applicable	
1.48	TFA (Technical Field Assistance):	1.5 Days Each	

Project: GE/Southern/Linde Advanced NGCC Integration
#: 20041223
Prepared by: Nick Mechler

1E - SPECIFICATION
HIGH VOLTAGE CIRCUIT BREAKERS

Specification Summary			
This specification covers the design of High Voltage Circuit Breakers in accordance with this specification and referenced Standards.			
Item	**Description**	**Specified Data**	**By Bidder**
		Breaker Type 1	
1.49	Preassembled Support Steel	Included	
1.50	SF6 Gas Supply	Included	
2	**Spare Parts**		
2.01	Manufacturer Recommended Startup Spare Parts	Included as Option	
2.02	Manufacturer Recommended 20-Year Spare Parts	N/A	
3	**Required Testing, Including but not Limited to:**		
3.01	Current and Linear Coupler Transformer Tests	Per IEEE C37.09 section 5.2	
3.02	Bushing Tests	Per IEEE C37.09 section 5.3	
3.03	Gas Receiver Tests	Per IEEE C37.09 section 5.4	
3.04	Pressure Tests	Per IEEE C37.09 section 5.4	
3.05	Tightness Tests	Per IEEE C37.09 section 5.6	
3.06	Resistor, Heaters, and Coil Check Tests	Per IEEE C37.09 section 5.8	
3.07	Control and Secondary Wiring Check Tests	Per IEEE C37.09 section 5.9	
3.08	Clearance and Mechanical Adjustment Check Tests	Per IEEE C37.09 section 5.10	
3.09	Mechanical Operation Tests	Per IEEE C37.09 section 5.11	
3.10	Timing Tests	Per IEEE C37.09 section 5.12	
3.11	Stored Energy System Tests	Per IEEE C37.09 section 5.13	
3.12	Conductivity of Current Path Tests	Per IEEE C37.09 section 5.14	
3.13	Power Frequency Withstand Voltage Tests on Primary Insulation	Per IEEE C37.09 section 5.15	
3.14	Power Frequency Withstand Voltage Tests on Control Circuits	Per IEEE C37.09 section 5.16	
3.15			
4	**Follow all the Latest Applicable Codes and Standards Including but not Limited to:**		
4.01	American National Standards Institute (ANSI)		
4.02	American Society of Testing and Materials (ASTM)		
4.03	Institute of Electrical and Electronic Engineers (IEEE)		
4.04	National Electrical Code (NEC)		
4.05	National Electrical Safety Code (NESC)		
4.06	National Electrical Manufacturers Association (NEMA)		
4.07	National Fire Protection Association (NFPA)		
4.08	Underwriters Laboratories (UL)		
4.09			
5	**Expected Lead Time**		**X**
6	**Other Information**		
6.01	Overall Dimensions (Length x Width x Height)		**X**
6.02	Shipping Weight (Lbs)		**X**
6.03	Total Installed Weight (Lbs)		**X**
7	**Additional Comments**		
7.01	Bidder to confirm that the breaker(s) are capable of interrupting short-line faults at specified short circuit current and that additional TRV capacitors / pre-insertion resistors are not required. Reference provided one line diagram.		**X**
7.02			
7.03			

APPENDIX A

SUBSTATION DRAWINGS

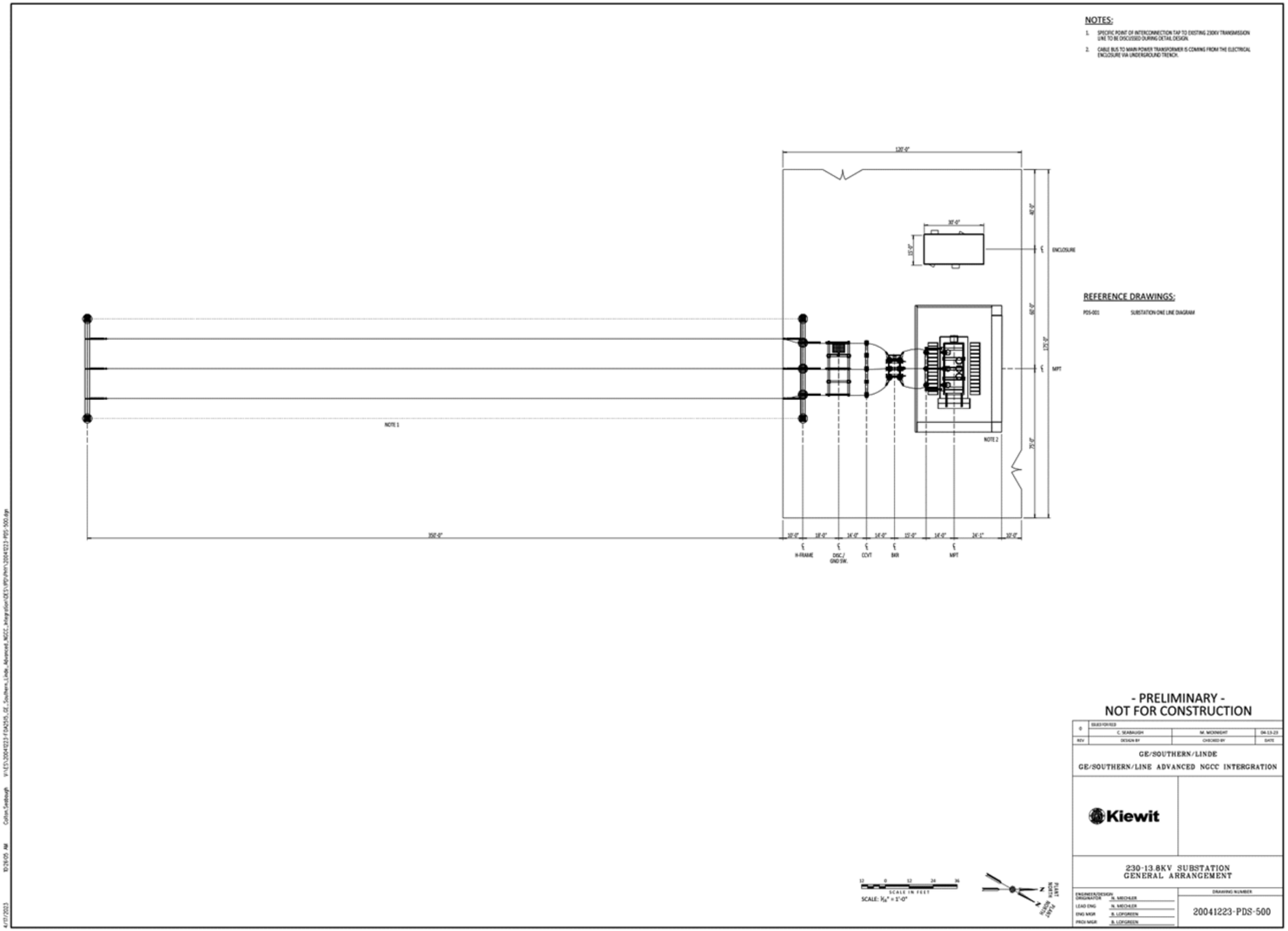
NOTES:
1. SPECIFIC POINT OF INTERCONNECTION TAP TO EXISTING 230KV TRANSMISSION LINE TO BE DISCUSSED DURING DETAIL DESIGN.
2. CABLE BUS TO MAIN POWER TRANSFORMER IS COMING FROM THE ELECTRICAL ENCLOSURE VIA UNDERGROUND TRENCH.
REFERENCE DRAWINGS:
PDS-001 SUBSTATION ONE LINE DIAGRAM
NOTE 1
NOTE 2
ENCLOSURE
MPT
H-FRAME
DISC./ GND SW.
CCVT
BKR
MPT
- PRELIMINARY -
NOT FOR CONSTRUCTION
GE/SOUTHERN/LINDE
GE/SOUTHERN/LINE ADVANCED NGCC INTERGRATION
Kiewit
230-13.8KV SUBSTATION
GENERAL ARRANGEMENT
20041223-PDS-500
SCALE IN FEET
SCALE: 1/16" = 1'-0"

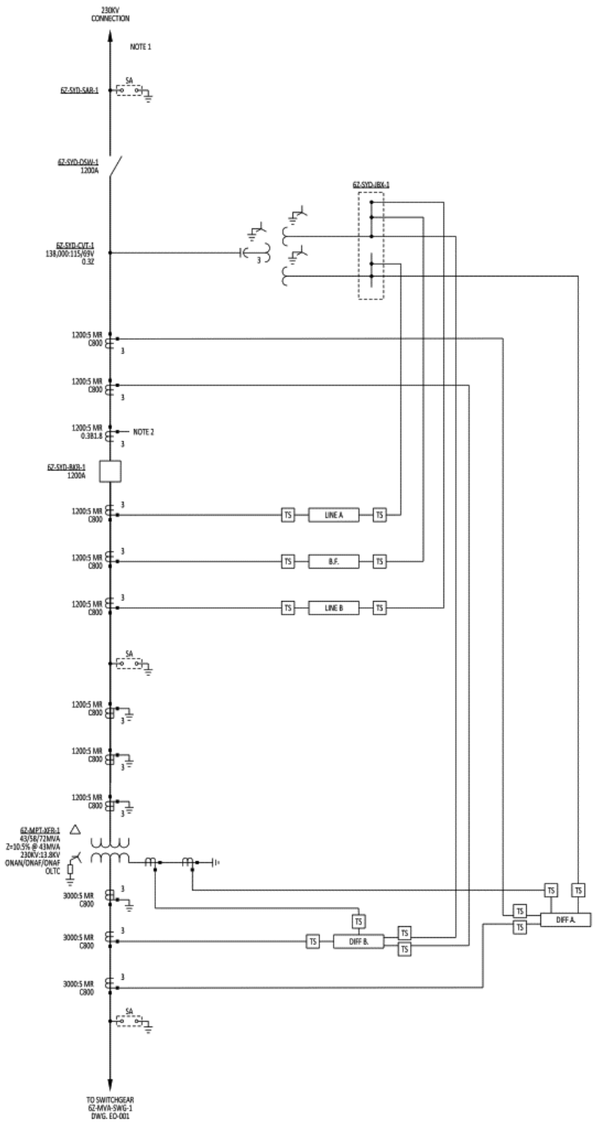

NOTES:

1. POINT OF INTERCONNECTION AT EXISTING 230KV TRANSMISSION LINE.
2. METERING REQUIREMENTS TO BE DETERMINED DURING DETAILED DESIGN.

REFERENCE DRAWINGS:

1. 20041223-PDS-500 GENERAL ARRANGEMENT
2. 20041223-EO-001 OVERALL ONE LINE

- PRELIMINARY -
NOT FOR CONSTRUCTION

REV	DESIGN BY	CHECKED BY	DATE
0	ISSUED FOR REVIEW K.YN	M. MCKNIGHT	04-28-23

GE/SOUTHERN/LINDE

GE/SOUTHERN/LINDE ADVANCED NGCC INTEGRATION

Kiewit

230/13.8KV
SUBSTATION ONE
LINE DIAGRAM

ENGINEER/DESIGN ORIGINATOR	K. YN
LEAD ENG	N. MECHLER
ENG MGR	B. LOFGREEN
PROJ MGR	B. LOFGREEN

DRAWING NUMBER

20041223-PDS-001

Appendix OO

OSBL Substation Outdoor Equipment Specification

Kiewit

SPECIFICATIONS FOR SUBSTATION OUTDOOR EQUIPMENT

94.03.26.475

GE / SOUTHERN / LINDE ADVANCED NGCC

KIEWIT PROJECT NO. 20041223

ISSUED: APRIL 28, 2023

REVISION 0 – ISSUED FOR FEED

TECHNICAL SPECIFICATIONS

TABLE OF CONTENTS

TITLE		Pages	Revision
1B	Section 1B	1B-1 – 1B-5	0
1E	Outdoor Equipment Specification	1E-1 – 1E-1	0
2E	Disconnect and Ground Switches Specification	2E-1 – 2E-2	0
TECHNICAL REQUIREMENTS			
APPENDIX A	Substation Drawings	2 page	0
GENERAL REQUIREMENTS			
E1	Motors-Induction Squirrel Cage Type	E1-1 – E1-21	
E2	Seller Furnished Controls and Wiring	E2-1 – E2-16	
I1	Seller Furnished Programmable Logic Controllers	I1-1 – I1-6	
I2	General Instrumentation Requirements	I2-1 – I2-12	
S1	Structural Loading and Design	S1-1 – S1-10	

ESTIMATING SECTION 1B

1. SITE DESIGN CONDITIONS: The Site conditions to be used as design and performance criteria are as follows:

   - Main Plant Finish Grade Elevation (Mean Sea Level) : 23 feet
   - Barometric pressure: 14.7 psia
   - High Ambient Temperature: 105 ° F
   - Low Ambient Temperature: 0 ° F
   - Temperature; Indoor Ambient (Dry Bulb)
     Occupied areas (Air Conditioned) 65 ° F to 75 ° F
     Non-occupied areas (Ventilated and Heated only) 40 ° F to 100 ° F

2. UTILITIES FOR COOLED EQUIPMENT:

   - Instrument Air Pressure Range: 60 – 120 psig
   - Design temperature for air cooled equipment: 105 ° F
   - Design cooling water inlet temperature for water-cooled equipment: 86 ° F
   - Cooling Water Composition 0% propylene glycol/100% water
   - Cooling Water Design Pressure 150 psig
   - Cooling Water Pressure Drop/Temperature Rise (NTE): 10psi /20 ° F

3. STRUCTURAL:

   - Precipitation: Average rainfall: 64 inches/year
   - Design 24 hour Storm Event 25 year / 100 year: 10.3 inches / 14.0 inches
   - Design Snow Loading: 0 psf ground / 0 psf roof (ASCE 7-16)
   - Minimum Design Basic Wind Speed: 153 mph (ASCE 7-16 – Risk Category III)
   - Design Wind Load and importance factor: I_w=1.00 (ASCE 7-16)
   - Exposure: C

ESTIMATING SECTION 1B

- Seismic Loading: Seismic Importance Factor I=1.25
  Occupancy / Risk Category III
  Site Class D
  Spectral Response Accelerations S_S=0.095 g, S_1=0.059 g
  Site coefficients F_a=1.6 and F_v=2.4
  Spectral Response Coefficients S_{DS}=0.109 g, S_{D1}=0.102 g
  Seismic Design Category B
  ATC Hazards by Location (ASCE 7-16)
- Winter Design: Freeze Protection is required; Frost depth = 12”
- Design life of the Facility: 30 years

4. NOISE CONTROL:

   Near Field: The A-weighted sound pressure level resulting from the operation of equipment furnished under these specifications (including drive motors) shall not exceed a free-field average (per piece of equipment) of 85 dBA along the equipment envelope at a height of 5 feet (1.5 meters) above the ground and personnel platforms. The equipment envelope is the perimeter line that completely encompasses the equipment package (including noise control devices) at a distance of 3 feet (1 meter) from the equipment face.

   Far Field: The A-weighted sound pressure level (dBA) at 400 ft from the emission source should be provided for EPC to evaluate the overall plant noise level at the plant boundary.

5. SITE ACCESS:

   The jobsite is located at Plant Barry in Bucks, Alabama. The jobsite can be accessed from the following:

   Road: The site is accessible from Highway 43

   Rail: No site rail access.

   Barge: Barge can be transported via the Mobile River through the Mobile Bay.

6. ADDITIONAL SITE CONSIDERATIONS:

7. GENERAL DESIGN REQUIREMENTS:
   a. Asbestos-containing materials will not be allowed.

ESTIMATING SECTION 1B

b. Only proven and tested technology fo the same model or nominal size and design conditions and in successful operation for at least five years in the exact same application shall be provided. There shall be no exception to this clause.

c. For projects located in Canada, CRN certification and local province requirements shall be incorporated into the equipment and pressure piping system design.

d. Mandatory Construction and Commissioning: One complete set of parts indicated in the Seller's documentation requiring to be replaced during the Construction, Testing or Startup phases of the Project (Mandatory Construction and Commissioning Parts) shall be included in the Seller's scope. For example, manway gaskets, hydro kit gaskets, or other that are routinely replaced after inspections and tests.

e. Pump Designs:Shut-off head at design speed shall be between 115 and 140% of the maximum total dynamic head (excluding circulating water pumps).

f. All rotating components and assemblies shall be dynamically balanced in accordance with Table 1 of ISO 1940.

g. Piping Design:
   i. Unless otherwise indicated in this specification, the minimum carbon steel piping schedule for NPS 2-1/2" and larger is STD, for 2" and smaller is Schedule 80.
   ii. Unless otherwise indicated in this specification, the minimum stainless steel piping schedule for NPS 2-1/2" and larger is 10S, for 2" and smaller is Schedule 40S.
   iii. Minimum allowable resultant force at each equipment nozzle shall be 250 lbs per nominal pipe size (NPS), and the minimum allowable resultant moment at each equipment nozzle shall be 500 ft-lbs per NPS. For instance, a 4 inch nozzle shall be designed for minimum 1,000 lbs resultant force and 2,000 ft-lbs resultant moment.
   iv. For skidded and Seller provided piping, high point vents and low point drains shall be provided. Vents and drains shall normally be isolated with globe valves and gate valves respectively, in liquid service. Ball valves shall be provided for vents & drains in natural gas and air services.
   v. Corrosion Allowance: Pipe wall thickness shall be calculated using the following corrosion allowances:
      - Carbon & Low/Intermediate Alloy Steels: 0.020"
      - Creep Strength Enhanced Ferritic (CSEF) Steels – 0.060"
      - Stainless Steel and Nickel Alloys : 0.000"
   vi. Steel flanges 2-1/2 inch and larger except for grooved pipe shall be weld neck, slip-on type is permitted for class 150 only, and all steel flanges 2 inch and smaller shall be of the socket type.
   vii. Fittings for tubing shall be flareless compression type, Swagelok or Parker Type 316 stainless steel.

ESTIMATING SECTION 1B

viii. All vent and drain islolation valves and instrument root valves rated ASME Class 900 or greater shall utilize double block root valves.
ix. Valve Actuators: Gear actuators shall be used on all valve sizes greater than 6 inch, and on any valve requiring more than 75 pounds rim pull to operate the valve at the maximum differential pressure.
x. All valve bonnets for valves with design temperatures of 150F or higher shall be provided with bonnet over pressure protection.

h. Approved Vendors:
i. Steel body gate, globe, angle, and check valves shall be manufactured by Velan, Crane, Pacific Valves, Anderson Greenwood-Crosby, Edward Vogt, SPX Corporation, Fisher Controls International, or Dresser, Inc.
ii. Butterfly valves shall be manufactured by Bray, Crane, Xomox, Ebro, Amri, or Centerline.
iii. Control valves shall be manufacturered by Fisher, Valtek, Leslie, Koso, or CCI.
iv. Coupling shall be of the flexible spacer type by Falk, Zurn, or engineer approved equal.
v. Instruments shall be manufacturered by:
- Transmitters: Rosemount, Foxboro
- Level Gauges: Jerguson
- Pressure Gauges, Temperature Switches: Ashcroft
- Temperature Gauges: Ashcroft EI case style
- Pressure and Differential Pressure Switches: Ashcroft, Merriam, Midwest
- Level Switches: Magnetrol, SOR, Jerguson/Magne-Sonics
- Solenoid Valves: ASCO
- Critical Service Flow Elements:, Triad, Fluidic Technologies, PFS
- Non-Critical Service Flow Elements: Dietrich Standard, Deltabar/Midwest Instruments, Veris
- Heated Instrument Enclosure: O'Brien

i. General Weld Requirements:
- Structural steel welding shall be in accordance with the applicable AWS welding code.
- Welding of fluid-conveying, non-structural steel, piping and pressure-containing materials shall be in accordance with ASME BPVC Section IX.

8. Quality and Examination Requirements:
a. Seller and Seller's sub-suppliers shall have a Quality Management System, approved by the buyer, in accordance with ISO9001. The Seller shall provide transparent supply chain integrity for the material sources.

b. Records in accordance to referenced code shall be maintained and available for submittal to the Buyer upon request. These records include but are not limited to:
i. Material Test Reports (MTR) of base and welding materials
ii. Welding Procedure Specification (WPS) and supporting Procedure Qualification Record (PQR)

ESTIMATING SECTION 1B

iii. Heat Treatment Records
iv. Final Non Destructive Examination (NDE) reports
v. Repair records
vi. Personnel qualification records
vii. Nonconformance reports
viii. Manufacture's Data Reports (MDR)

END OF SECTION

1E - Specification Outdoor Package Equipment (HV) Rev 0					
Specification Summary: This specification covers the design of Outdoor Package Equipment (HV) in accordance with this specification and referenced Standards.					
High Voltage Equipment					
Item	**General Requirement**	**Specified Data**			
1	Nominal System Voltage	**230 kV**			
2	Basic Insulation Level (BIL)	**1050 kV**			
	High Voltage Bus Fault Current	**63 KAIC**			
	Insulators				
	Type 1				
2	Quantity	**9**			**EA**
3	Type	**Station Post**			**Porcelain**
4	Purpose	**Conductor Support**			
5	Strength Class	**Extra High**			
6	Creepage Distance	**230 in.**			
7	Top Bolt Circle	**5"**			
8	Bottom Bolt Circle	**5"**			
9	Mount Type	**Horizontal**			
	Jumper Conductor				
	Type 1				
19	Quantity	**1600**			**LF**
20	Conductor Size, Strand and Type	**1590**	**45/7**	**Strand**	**ACSR**
21	Conductor Fitting Type	**Bolted**			
	Vertically Mounted CCVT				
22	Quantity	**1**			**EA**
23	Maximum Primary Phase to Phase Voltage	**230**			**kV**
24	Nominal Primary Phase to Phase Voltage	**230**			**kV**
25	Basic Impulse Level (BIL)	**900**			**kV**
26	Secondary Voltage	**115/69**			**V**
27	Ratio	**1200/2000 : 1**			
28	Secondary Winding Burden and Accuracy	**0.3 Z**			
29	Total Capacitance	**Manufacturer to Specify**			
30	Porcelain Bushing Color	**ANSI 70 Gray**			
31	Porcelain Bushing Minimum Creepage	**193**			**in**
32	Number of Secondaries	**2**			
	Additional Requirements				

Project: GE/Southern/Linde Advanced NGCC Integration
#: 20041223
Prepared by: Nick Mechler

2E - SPECIFICATION
DISCONNECT & GROUND SWITCHES

Specification Summary			
This specification covers the design of Disconnect & Ground Switches in accordance with this specification and referenced Standards.			
Item	**Description**	**Specified Data**	**By Bidder**
		Switch Type 1	
1	**General Requirements**		
1.01	Quantity	1	
1.02	Manufacturer		X
1.03	Model		X
1.04	Nominal System Voltage	230kV	
1.05	Rated Maximum System Voltage	245kV	
1.06	Frequency	60Hz	
1.07	Phases Per Unit	3	
1.08	Gang or Independent Pole Operation	Gang Operated	
1.09	Rated Continuous Current	1200A	
1.10	Rated Short-Circuit Current (1/2 Cycle Symmetrical)	63kA	
1.11	Basic Insulation Level	1500kV	
1.12	Insulator Material	Porcelain / Polymer Composite	
1.13	Insulator Creepage Distance	1 inch/kV (Heavy Contamination)	
1.14	Cabinet NEMA Rating	3R	
1.15	Mounting Orientation	Vertical	
1.16	Disconnect Switch	Yes	
1.17	Disconnect Switch Type	Vertical Break	
1.18	Disconnect Switch Motor Operator	Included	
1.19	Disconnect Switch Maximum Operating Time	15sec	
1.20	Disconnect Switch Ice Breaking Rating	N/A	
1.21	Disconnect Switch Arcing Horns		X
1.22	Disconnect Switch Auxiliary Contacts	5 Spare "A" & 5 Spare "B"	
1.23	Ground Switch	No	
1.24	Ground Switch Quantity Per Disconnect Switch	N/A	
1.25	Ground Switch Motor Operator	N/A	
1.26	Ground Switch Maximum Operating Time	N/A	
1.27	Ground Switch Ice Breaking Rating	N/A	
1.28	Ground Switch Auxiliary Contacts	N/A	
1.29	Rated Control Voltage	125VDC	
1.30	Rated Motor Voltage	125VDC	
1.31	Rated Cabinet Heater Voltage	240VAC 1P	
2	**Spare Parts**		
2.01	Manufacturer Recommended Startup Spare Parts	Included as Option	
2.02	Manufacturer Recommended 20-Year Spare Parts	N/A	
3	**Required Testing, Including but not Limited to:**		
3.01	Withstand Voltage Tests	Per IEEE C37.30.1 section 8.1	
3.02	Temperature Rise Tests	Per IEEE C37.30.1 section 8.2	
3.03	Short-Time Withstand Current Tests	Per IEEE C37.30.1 section 8.3	
3.04	Fault-Making Current Test	Per IEEE C37.30.1 section 8.4	
3.05	Ice-Loading Test	Per IEEE C37.30.1 section 8.5	
3.06	Mechanical Operation Tests	Per IEEE C37.30.1 section 8.6	
3.07	Corona Tests	Per IEEE C37.30.1 section 8.7	
3.08	Radio-Influence Tests	Per IEEE C37.30.1 section 8.8	
3.09	Partial Discharge Tests	Per IEEE C37.30.1 section 8.9	
3.10			

Project: GE/Southern/Linde Advanced NGCC Integration
#: 20041223
Prepared by: Nick Mechler

2E - SPECIFICATION
DISCONNECT & GROUND SWITCHES

Specification Summary			
This specification covers the design of Disconnect & Ground Switches in accordance with this specification and referenced Standards.			
Item	**Description**	**Specified Data**	**By Bidder**
		Switch Type 1	
4	**Follow all the Latest Applicable Codes and Standards Including but not Limited to:**		
4.01	American National Standards Institute (ANSI)		
4.02	American Society of Testing and Materials (ASTM)		
4.03	Institute of Electrical and Electronic Engineers (IEEE)		
4.04	National Electrical Code (NEC)		
4.05	National Electrical Safety Code (NESC)		
4.06	National Electrical Manufacturers Association (NEMA)		
4.07	National Fire Protection Association (NFPA)		
4.08	Underwriters Laboratories (UL)		
4.09			
5	**Expected Lead Time**		**X**
6	**Other Information**		
6.01	Overall Dimensions (Length x Width x Height)		**X**
6.02	Shipping Weight (Lbs)		**X**
6.03	Total Installed Weight (Lbs)		**X**
7	**Additional Comments**		
7.01			
7.02			
7.03			

APPENDIX A

SUBSTATION DRAWINGS

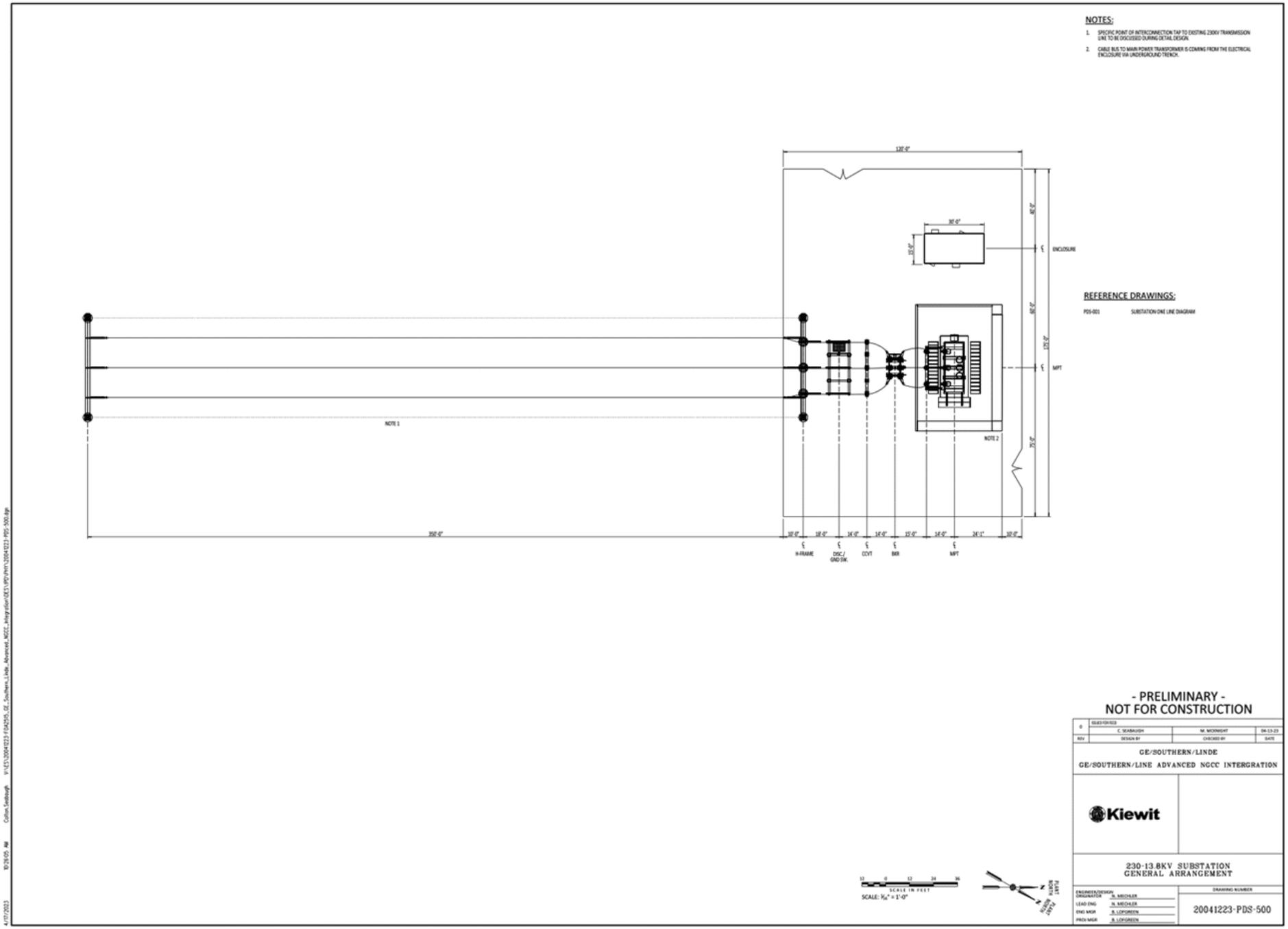
NOTES:
1. SPECIFIC POINT OF INTERCONNECTION TAP TO EXISTING 230KV TRANSMISSION LINE TO BE DISCUSSED DURING DETAIL DESIGN.
2. CABLE BUS TO MAIN POWER TRANSFORMER IS COMING FROM THE ELECTRICAL ENCLOSURE VIA UNDERGROUND TRENCH.
REFERENCE DRAWINGS:
PDS-001 SUBSTATION ONE LINE DIAGRAM
120'-0"
30'-0"
15'-0"
ENCLOSURE
MPT
NOTE 1
NOTE 2
350'-0"
10'-0"
18'-0"
14'-0"
14'-0"
15'-0"
14'-0"
24'-1"
10'-0"
H-FRAME
DISC./ GND SW.
CCVT
BKR
MPT
- PRELIMINARY -
NOT FOR CONSTRUCTION
GE/SOUTHERN/LINDE
GE/SOUTHERN/LINE ADVANCED NGCC INTERGRATION
Kiewit
230-13.8KV SUBSTATION
GENERAL ARRANGEMENT
20041223-PDS-500
SCALE: 1/16" = 1'-0"

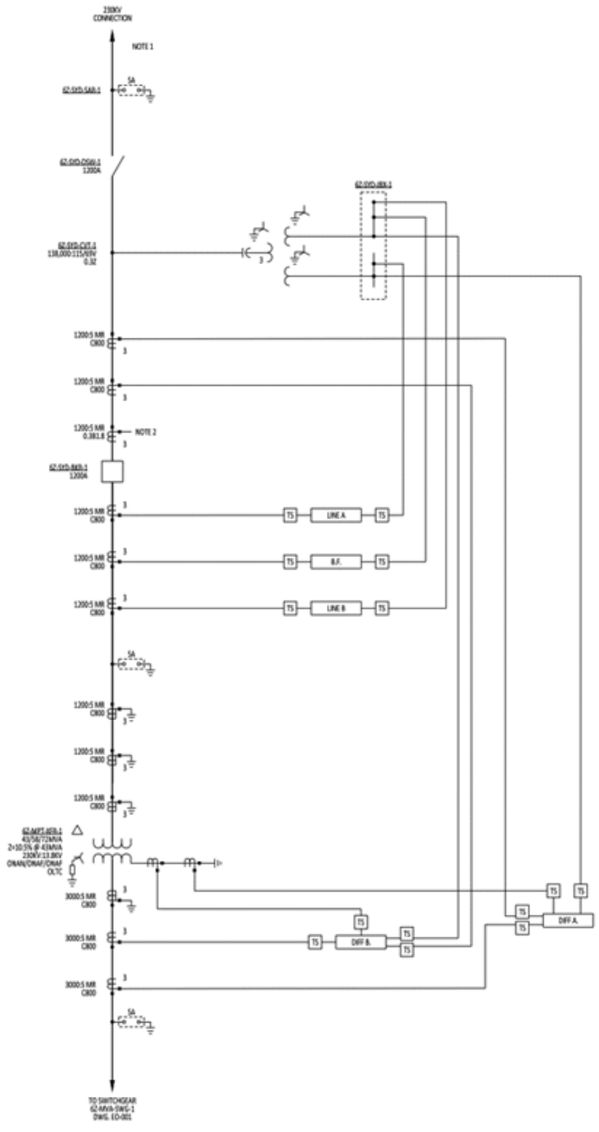

NOTES:

1. POINT OF INTERCONNECTION AT EXISTING 230KV TRANSMISSION LINE.
2. METERING REQUIREMENTS TO BE DETERMINED DURING DETAILED DESIGN.

REFERENCE DRAWINGS:

1. 20041223-PDS-500 GENERAL ARRANGEMENT
2. 20041223-ED-001 OVERALL ONE LINE

- PRELIMINARY -
NOT FOR CONSTRUCTION

REV	DESIGN BY	CHECKED BY	DATE
0	ISSUED FOR REVIEW		
	K.YIN	M. MCKNIGHT	04.28.23

GE/SOUTHERN/LINDE

GE/SOUTHERN/LINDE ADVANCED NGCC INTEGRATION

Kiewit

230/13.8KV
SUBSTATION ONE
LINE DIAGRAM

ENGINEER/DESIGN ORIGINATOR	K. YIN	DRAWING NUMBER
LEAD ENG	N. MECHLER	20041223-PDS-001
ENG MGR	B. LOFGREEN	
PROJ MGR	B. LOFGREEN	

Appendix PP

OSBL Metal Buildings Specification

Kiewit

SPECIFICATIONS FOR PRE-ENGINEERED METAL BUIDLINGS

20041223-95.83.01-PR-001

GE / SOUTHERN / LINDE ADVANCED NGCC

KIEWIT PROJECT NO. 20041223

ISSUED: JULY 27, 2023

REVISION 0 – ISSUED FOR FEED

Kiewit

BUILDING ARCHITECTURAL OUTLINE
TECHNICAL SPECIFICATIONS

SECTION 061000 - ROUGH CARPENTRY

1.1 MATERIALS

A. Fire-Retardant-Treatment:

1. Interior Type A unless otherwise indicated.
2. Application: All rough carpentry.

a. Concealed blocking.

B. Miscellaneous Lumber:

1. Dimension Lumber: Standard, Stud, or No. 3 grade any species .
2. Concealed Boards: 19 percent maximum moisture content.

C. Plywood Backing Panels: Exposure 1, C-D Plugged.

D. Fasteners: Hot-dip galvanized steel where exposed to weather, in ground contact, in contact with treated wood, or in area of high relative humidity.

END OF SECTION 061000

SECTION 072100 - THERMAL INSULATION

0.1 MATERIALS

A. Insulation:

1. Provide insulation in thicknesses to meet local energy code requirements.
2. Stud Walls: Glass-Fiber Blankets & Batts: Unfaced or Kraft faced.
3. Below slab applications: Extruded Polystyrene Board (XPS): Type V, 100 psi.
4. Below grade foundation wall applications: Extruded Polystyrene Board (XPS): Type IV, 25 psi.

0.2 MANUFACTURERS

A. Owens Corning

END OF SECTION 072100

SECTION 074213.13 - FORMED METAL WALL PANELS

1.1 PRODUCTS

A. Exposed-Fastener, Lap-Seam Metal Wall Panels:

1. Profile: Tapered rib.
2. Material: Metallic-coated steel sheet.
3. Exterior Finish: Two-coat fluoropolymer.

B. Metal Liner Panels:

1. Seam Profile: Striated.
2. Material: Metallic-coated steel sheet.
3. Exterior Finish: Two-coat fluoropolymer .

C. Accessories: Flashing and trim.

2.1 MANUFACTURER

A. Nucor Building Systems

END OF SECTION 074213.13

SECTION 076200 - SHEET METAL FLASHING AND TRIM

1.1 MATERIALS

A. Sheet Metals:

1. Metallic-Coated Steel Sheet:

a. Coil-Coated Finish: Two-coat fluoropolymer .

2.1 PRODUCTS

A. Formed Roof-Drainage Fabrications: Including hanging gutters downspouts parapet scuppers conductor heads .

B. Formed Low-Slope Roof Fabrications: Including roof edge flashing and fascia cap copings base flashing counterflashing .

C. Formed Wall Fabrications: Including opening flashings in frame construction.

END OF SECTION 076200

SECTION 077200 - ROOF ACCESSORIES

1.1 PRODUCTS

A. Roof Curbs: Insulated with foil faced insulation, min. 1 1/2 inches thick.

1. Basis of Design Manufacturer: CurbsPlus.
2. Height: Minimum 12 inches.
3. Material: 14 Ga. Zinc-coated (galvanized) steel .
4. One-piece, continuously welded, mitered corners for watertight construction. Provide crickets as required.
5. Finish: Two-coat fluoropolymer, color to match adjacent roofing.

2.1 MANUFACTURER

A. CurbsPlus

END OF SECTION 077200

SECTION 078413 - PENETRATION FIRESTOPPING

1.1 PENETRATION FIRESTOPPING

A. Penetrations in Fire-Resistance-Rated Walls: F-ratings per ASTM E814 or UL 1479.

B. Penetrations in Horizontal Assemblies: F-, T-, and W-ratings per ASTM E814 or UL 1479.

C. Penetrations in Smoke Barriers: L-ratings per UL 1479.

END OF SECTION 078413

SECTION 079200 - JOINT SEALANTS

1.1 JOINT SEALANTS

A. Nonstaining single-component silicone joint sealants. ASTM C920, Type S, Grade NS, Class 100/50, for Use NT.

1. Location of use:

a. Exterior joints in vertical surfaces and horizontal nontraffic surfaces.
b. Interior joints in vertical surfaces and horizontal nontraffic surfaces.

B. Nonstaining single component silicone joint sealant. ASTM C920, Type S, Grade NS, Class 100/50, for Use T.

1. Location of use:

a. Interior joints in horizontal traffic surfaces.

C. Mildew-Resistant, nonstaining, single-component silicone joint sealants. ASTM C920, Type S, Grade NS, Class 50, for Use NT.

1. Location of use:

a. Joints between plumbing fixtures and wall surfaces.

D. Joint-sealant backing.

1. Cylindrical closed-cell sealant backing with a surface skin.

2.1 MANUFACTURER

A. Pecora Corporation

END OF SECTION 079200

SECTION 081113 - HOLLOW METAL DOORS AND FRAMES

1.0 PERFORMANCE REQUIREMENTS

A. Fire-rated assemblies, of types and locations indicated on the drawings.

2.0 INTERIOR STANDARD STEEL DOORS AND FRAMES

A. Heavy-Duty Doors and Frames: ANSI/SDI A250.8, Level 2.

1. Face: Uncoated steel sheet, minimum thickness of 0.042 inch.
2. Edge Construction: Model 2, Seamless.
3. Core: Manufacturer's standard.
4. Frames: Full profile welded; uncoated steel sheet, minimum thickness of 0.053 inch.
5. Exposed Finish: Prime.

3.0 EXTERIOR STANDARD STEEL DOORS AND FRAMES

A. Extra-Heavy-Duty Doors and Frames: ANSI/SDI A250.8, Level 3.

1. Face: Metallic-coated steel sheet, minimum thickness of 0.053 inch.
2. Edge Construction: Model 2, Seamless.
3. Core: Manufacturer's standard.
4. Frames Full profile welded; metallic-coated steel sheet, minimum thickness of 0.053 inch.
5. Exposed Finish: Prime.
6. R-value: R-0.61.

4.0 MANUFACTURER

A. Curries

END OF SECTION 081113

SECTION 084113 - ALUMINUM-FRAMED ENTRANCES AND STOREFRONTS

1.1 SYSTEM COMPONENTS

A. Frames and Sashes: Aluminum extrusions complying with AAMA/WDMA/CSA 101/I.S.2/A440.

B. Glazing System: Manufacturer's standard factory-glazing system that produces weathertight seal.

C. Storefront Framing:

1. Exterior Construction: Thermally broken.
2. Glazing System: Gaskets on four sides.
3. Glazing Plane: Front.
4. U-Factor: refer to drawings

a. (editor's note: adjust U-Factor as required to meet IECC reqm'ts)

D. Entrance Doors:

1. Door Construction: 1-3/4-inch overall thickness.
2. Door Design: Wide stile.
3. Glazing stops and gaskets.
4. R-Value: refer to drawings

a. (editor's note: adjust R-Value as required)

2.1 ALUMINUM FINISHES

A. Aluminum Finishes: Class I, clear anodic.

3.1 MANUFACTURER

A. Kawneer

1. Storefront Framing: Trifab 451T

2. Entrance Doors: Model 250T

END OF SECTION 084113

SECTION 087100 - DOOR HARDWARE

1.0 DOOR HARDWARE SCHEDULE

A. Refer to Appendix Item 087100-A Door Hardware Schedule.

END OF SECTION 087100

APPENDIX 087100-A: DOOR HARDWARE SCHEDULE				
QTY	**Item**	**Item Description**	**Finish**	**Manufacturer Allegion PLC**
3	Hinge	5BB1HW NRP 4.5"x4.5" (4 EA. LEAF AT DOORS OVER 7'6" HEIGHT)	630	Ives
1	Auto Flush Bolt	FB31P	630	Ives
	Lock Sets	**ND Series (U.N.O)** **Sparta Lever (U.N.O.)**		**Schlage**
1	Storeroom Lock	ANSI F86	630	
1	Entrance/Office Lock	ANSI F82	630	
1	Passage Set	ANSI F75	630	
1	Entrance Lock	ANSI F20; L Series; Full Face with ADA thumb	630	
1	Core	6-pin, Conventional KIL with Primus XP (provide temporary construction cores)	630	Schlage
1	Magnetic Lock	M490P 12/24 VDC	628	Schlage
1	Push Plate	8200 4" X 16"	630	Ives
1	Pull Plate	8303 10" 4" X 16"	630	Ives
1	Surface Closer	4040XP EDA SRI	689	LCN
1	Kick Plate	8400 10" tall x 2" shorter of door width (B-NHA)	630	Ives
1	Floor Stop	FS444	626	Ives
1	Wall Stop	WS406/407CCV	630	Ives
3	Silencer	SR64	GRY	Ives
1	Rain Drip	142AA	AA	Zero
1	Door Bottom	361AA	AA	Zero
1	Gasketing (set)	429AA-S	AA	Zero
1	Astragal (set)	383AA	AA	Zero
1	Door Sweep	8192AA	AA	Zero
1	Threshold	65A-223	AA	Zero
1	Door Contact	679-05 HM/WD AS REQ'D	WHT	Schlage
1	Push Button	621GREX DA 12/24 VDC	630	Schlage
1	Motion Sensor	SCANII 12/24 VDC	WHT	Schlage
1	Card Access	Coordinate with Security Contractor		

SECTION 088000 - GLAZING

0.1 MONOLITHIC GLASS

A. Clear float glass: 6mm

B. Clear heat-strengthened (tempered) float glass: 6mm; provide at locations required by code.

0.2 LAMINATED GLASS

A. Clear Laminated Glass Type: 6mm outer layers, .030 inch (PVB interlayer); fully tempered float glass.

0.3 INSULATING GLASS

A. Clear Insulating Glass Type:

1. Outdoor Lite: Monolithic glass
2. Indoor Lite: Monolithic glass.
3. U-Factor: U-0.50
4. Argon gas filled units.

B. Low-E-Coated, Tinted Insulating Glass Type:

1. Outdoor Lite: Tinted monolithic glass, with Low-E coating on 2nd face.

    a. Tint: selected from manufacturer standard colors.

2. Indoor Lite: Clear monolithic glass.
3. U-Factor: U-0.50
4. Argon gas filled.

0.4 MANUFACTURER

A. Viracon

END OF SECTION 088000

SECTION 092900 - GYPSUM BOARD

1.1 MATERIALS

A. Interior Gypsum Board in thicknesses indicated on drawings:

1. Gypsum wallboard - 5/8" wall panel; 1/2" ceiling panel or as indicated on drawings.
2. Gypsum board, Type X - 5/8" panel.
3. Mold-resistant gypsum board - 5/8" wall panel; 1/2" ceiling panel or as indicated on drawings.

B. Tile-Backing Panels: Glass-Mat, Water-Resistant Backing Board: ASTM C1178/C1178M, with manufacturer's standard edges.

Retain "Manufacturers" Subparagraph and list of manufacturers below to require products from manufacturers listed or a comparable product from other manufacturers.

1. Core: 5/8 inch, Type X.
2. Mold Resistance: ASTM D3273, score of 10 as rated according to ASTM D3274.

C. Interior Trim: ASTM C1047.

1. Material: Paper-faced galvanized-steel sheet.

2.1 MANUFACTURER

A. USG Corporation

END OF SECTION 092900

SECTION 093013 - CERAMIC TILING

1.1 TILE PRODUCTS

A. Floor Tile:

1. Glazed Porcelain , 12"x12".

B. Wall Tile:

1. Glazed Ceramic, 4" x 16".

2. Use metal edge trims at corners and top edges of wainscots etc.

2.1 ACCESSORY MATERIALS

A. Thresholds: ADA compliant.

B. Metal edge strips

3.1 MANUFACTURER

A. Daltile

1. Floor Tile: Volume 1.0.
2. Wall Tile: Color Wheel Collection - Linear

B. Schluter Systems

1. Thresholds: RENO-U

2. Metal Edge & Wainscott Trims: JOLLY

END OF SECTION 093013

SECTION 095113 - ACOUSTICAL PANEL CEILINGS

1.1 PRODUCTS

A. Acoustical Panels:

1. Type III: Mineral base with painted finish.
2. Pattern: CE (perforated, small holes and lightly textured).
3. Thickness: 5/8 inch .
4. Modular Size: 24 by 48 inches .

B. Metal Suspension System:

1. Wide-Face, Single-Web Steel: Heavy duty.

2.1 MANUFACTURER

1. Armstrong World Industries

a. Cirrus

END OF SECTION 095113

SECTION 096513 - RESILIENT BASE AND ACCESSORIES

1.1 PRODUCTS

A. Resilient Base: Thermoset rubber.

1. Style and Location:

a. Straight: In areas with carpet.
b. Cove: In areas with resilient flooring or of sealed or polished concrete.

2. Minimum Thickness: 0.125 inch.
3. Height: 4 inches.
4. Outside Corners: Job formed.
5. Inside Corners: Job formed.

2.1 MANUFACTURERS

A. Armstrong World Industries

B. Tarkett

END OF SECTION 096513

SECTION 096900 - ACCESS FLOORING

1.1 PRODUCTS

A. Cementitious-Core Steel Panel Access Flooring:

1. Size: 24 by 24 inches.

2. Stringers: Bolted

3. Accessories:

a. Provide manufacturer¢s standard steps, ramps, fascia plate, perimeter support, and grommets where indicated on the contract drawings.

4. Finishes:

a. Static Control Resilient Flooring

2.1 MANUFACTURERS

A. Tate Access Floors, Inc.

1. ConCore 1250 system

B. FLEXCO Corporation

1. Delane ESD Vinyl

END OF SECTION 096900

SECTION 099123 - INTERIOR PAINTING

1.0 INTERIOR PAINTING SCHEDULE

A. Refer to Appendix Item 099123-A Interior Painting Schedule.

END OF SECTION 099123

099123-A Interior Painting Schedule

LOC		SUBSTRATE	LEVEL (NORMAL/AGGRESSIVE)	FINISH (OPAQUE/TRANSPARENT)	MPI#	COAT	MFG & PROD #
		CONCRETE MASONRY UNITS	NORM	OP	INT 4.2A-G3	PRIMER	Sherwin Williams CF01W0050
						INT	Sherwin Williams A62W00051
						TOP	Sherwin Williams A62W00051
	METAL	STRUCTURAL STEEL AND METAL FABRICATIONS	NORM	OP	INT 5.1QQ-G5	PRIMER	Sherwin Williams B50WV8430
						INT	Sherwin Williams D18W00151
						TOP	Sherwin Williams D18W00151
		GALVANIZED METAL	NORM	OP	INT 5.3J-G5	PRIMER	Sherwin Williams B51W00620
						INT	Sherwin Williams D18W00151
						TOP	Sherwin Williams D18W00151
	DRYWALL	PLASTER AND GYPSUM BOARD	NORM	OP	INT 9.2A-G3	PRIMER	Sherwin Williams B28W08150
						INT	Sherwin Williams A62W00051
						TOP	Sherwin Williams A62W00051

SECTION 101423.16 - ROOM-IDENTIFICATION PANEL SIGNAGE

1.0 SIGNS

A. Room-Identification Sign : Sign system; See Appendix Schedule 101423.16-A.

1. Acrylic Sign: sheet with raised graphics.
2. Mounting: Surface mounted as applicable to Manufacturers recommendations per substrate..
3. Text and Typeface: Applied Lettering and/or Numerals: LPP Series Individual, Acrylic, Dimensional Characters. Individual cut acrylic letters (1/32 inch thick) with matte finish.
4. Grade 2 Braille: Clear raster balls.

2.0 |MANUFACTURERS

A. ASI Sign Systems, Inc.; InTac

END OF SECTION 101423.16

101423 SIGNAGE		
	Signage Location	**Signage Description and Conditions**
1	Restroom - Accessible	At all Accessible restrooms (Male, Female, Unisex); Pictogram with corresponding Characters and Braille. Where required, it shall comply with State and Local codes.
2	Entry - Acccessible	International symbol of Accessibility shall be posted at Entrances and Facilities accessible and uasable by individuals with disabilities. Where required, it shall comply with State and Local codes.
3	Exit - Tactile; Exit Route - Tactile; To Exit - Tactile	Required at: Wherever basic building code provisions require Exit signs from a Room or Area to a Corridor or Hallway. The tactile Exit sign shall have the words "Exit Route"; Each Grade-Level Exit door. The tactile Exit sign shall have the word "Exit"; Each Exit door that leads directly to a Grade-Level Exterior Exit by means of a Stairway or Ramp. THe Tactile Exit sign shall have the words "Exit Route"
8	General Directional	Lobby, Wall Mounted, Floor Mounted, Controls & Outlets - Owner or Contract Required Only; Shall comply with State and Local codes.
9	General Room	Owner or Contract Required Only; Shall comply with State and Local codes.

SECTION 102800 - TOILET, BATH, AND LAUNDRY ACCESSORIES

1.1 PRODUCTS

A. Public-Use Washroom Accessories:

1. Combination toilet tissue dispenser w/ seat cover and napkin disposal: Bobrick 3574
2. Combination towel (folded) dispenser/waste receptacle: Bobrick B-3940
3. Soap dispenser: Bobrick 2112
4. Grab bar - 42" Horizontal Straight for side wall: Bobrick 6806x42
5. Grab bar - 36" Horizontal Straight for back wall: Bobrick 6806x36
6. Grab bar - 18" Vertical Straight for side wall: Bobrick 6806x18
7. Mirror unit: Bradley MIR747 - Configured Frameless Mirror 30"x36"
8. Double Robe Hook - For Toilet Partitions: Bobrick 76727 - Satin Finish
9. Double Robe Hook - For Shower Compartments: Bobrick 6727 - Satin Finish

B. Underlavatory guards: Plumberex Specialty Products Inc - Handy Shield Maxx

C. Custodial Accessories:
1. Mop and broom holder w/ intragral shelf: Bobrick B-239

2.1 MANUFACTURERS

A. Bobrick Washroom Equipment, Inc.

END OF SECTION 102800

SECTION 104413 - FIRE PROTECTION CABINETS

1.1 PRODUCTS

A. Fire-Protection Cabinets:

1. Type: Fire extinguisher.
2. Cabinet Construction: Per Wall Assembly Nonrated, One-hour fire rated or Two-hour fire rated.
3. Mounting: Semirecessed.
4. Door Style: Vertical duo panel with frame.
5. Door Glazing: Acrylic sheet.
6. Finish:

a. Steel: Baked enamel, complying with AAMA 2603.

2.1 MANUFACTURERS

A. Babcock-Davis

END OF SECTION 104413

SECTION 104416 - FIRE EXTINGUISHERS

1.1 PRODUCTS

A. Portable Hand-Carried Fire Extinguishers:
   1. Dry-powder type in Steel Container: UL-rated 2-A:10-B:C, 10lb nominal capacity.

B. Mounting brackets.

2.1 MANUFACTURERS

A. Babcock-Davis

END OF SECTION 104416

SECTION 105113 - METAL LOCKERS

1.1 PRODUCTS

A. Welded Corridor Lockers:

1. Size 15"W x 15"D x 72"H
2. Doors: Vented.
3. Hinges: Manufacturer's standard.
4. Door Handle and Latch: Integral pull and padlock loop (box lockers).
5. Base: Continuous zee type.
6. Tops: Continuous, sloping.
7. Ends: Finished end panels.
8. Finish: Powder-coated (select color from manufacturer's standard pallet)

B. Locker Benches:

1. Tops: Laminated hardwood.
2. Pedestals: Fixed, tubular steel.
3. Size: manufacturer's standard

2.1 MANUFACTURERS

A. ASI Storage Solutions - Traditional Collection

END OF SECTION 105113

SECTION 123216 - MANUFACTURED PLASTIC-LAMINATE-CLAD CASEWORK

0.1 CASEWORK, GENERAL

A. Quality Standard: AWI/AWMAC/WI's "Architectural Woodwork Standards."

1. Grade: Custom.

0.2 FABRICATION

A. Drawer Bodies: Wood or plywood.

0.3 MATERIALS

A. Hardware:

1. Hinges: Butt.
2. Pulls: Wire.
3. Label holders.
~~7.~~ Drawer and door locks

END OF SECTION 123216

SECTION 123661.16 - SOLID SURFACING COUNTERTOPS

1.1 SOLID SURFACE MATERIAL COUNTERTOPS

A. Front: 3/4-inch Bullnose.

B. Backsplash: Straight, slightly eased at corner.

C. End Splash: Matching backsplash.

D. Countertops:

1. 3/4-inch- thick, solid surface material.
2. 1/4-inch- thick, solid surface material laminated to particleboard.

E. Integral sinks Bowls: Comply with CSA B45.5/IAPMO Z124.

2.1 MANUFACTURERS

A. Wilsonart International Holdings, Inc.

END OF SECTION 123661.16

SECTION 133419 - METAL BUILDING SYSTEMS

PART 1 - GENERAL

1.1 SUMMARY

A. Section Includes:

1. Structural-steel framing.

1.2 DEFINITIONS

A. Terminology Standard: See MBMA's "Metal Building Systems Manual" for definitions of terms for metal building system construction not otherwise defined in this Section or in standards referenced by this Section.

1.3 COORDINATION

A. Coordinate sizes and locations of concrete foundations and casting of anchor-rod inserts into foundation walls and footings. Anchor rod installation, concrete, reinforcement, and formwork requirements are specified in Section 033000 "Cast-in-Place Concrete."

B. Coordinate metal panel assemblies with rain drainage work, flashing, trim, and construction of supports and other adjoining work to provide a leakproof, secure, and noncorrosive installation.

1.4 DELIVERY, STORAGE, AND HANDLING

A. Deliver components, sheets, panels, and other manufactured items so as not to be damaged or deformed. Package metal panels for protection during transportation and handling.

B. Unload, store, and erect metal panels in a manner to prevent bending, warping, twisting, and surface damage.

1.5 FIELD CONDITIONS

A. Weather Limitations: Proceed with panel installation only when weather conditions permit metal panels to be installed according to manufacturers' written instructions and warranty requirements.

PART 2 - PRODUCTS

2.1 MANUFACTURERS

A. Manufacturers: Subject to compliance with requirements, available manufacturers offering products that may be incorporated into the Work include, but are not limited to, the following:

1. American Buildings Company; a Nucor Company.
2. Ceco Building Systems; an NCI company.
3. Nucor Corporation, Nucor Buildings Group.

B. Source Limitations: Obtain metal building system components, including primary and secondary framing and metal panel assemblies, from single source from single manufacturer.

2.2 SYSTEM DESCRIPTION

A. Provide a complete, integrated set of mutually dependent components and assemblies that form a metal building system capable of withstanding structural and other loads, thermally induced movement, and exposure to weather without failure or infiltration of water into building interior.

B. Primary-Frame Type:

1. Rigid Clear Span: Solid-member, structural-framing system without interior columns.

C. End-Wall Framing:

1. Manufacturer's standard, for buildings not required to be expandable, consisting of .

D. Secondary-Frame Type: Manufacturer's standard purlins and joists and exterior-framed (bypass) girts.

E. Eave Height: As indicated on Drawings.

F. Bay Spacing: As indicated on Drawings.

G. Roof Slope: 1 inch per 12 inches.

H. Roof System: Manufacturer's standard standing-seam, vertical-rib, metal roof panels.

I. Exterior Wall System: Manufacturer's standard exposed-fastener, tapered-rib, metal wall panels.

2.3 PERFORMANCE REQUIREMENTS

A. Structural Performance: Metal building systems to withstand the effects of gravity loads and the following loads and stresses within limits and under conditions indicated according to procedures in MBMA's "Metal Building Systems Manual."

1. Design Loads:Snow, seismic, wind, uplift and load combinations shall be derived per ASCE 7-16 specific to the final, installed building location.
2. Deflection and Drift Limits:

a. Design metal building system assemblies to withstand serviceability design loads without exceeding deflections and drift limits recommended in AISC Steel Design Guide No. 3 "Serviceability Design Considerations for Steel Buildings."
b. No greater than the following:

1) Purlins and Rafters: Vertical deflection of 1/240 of the span.
2) Girts: Horizontal deflection of 1/180 of the span.
3) Metal Roof Panels: Vertical deflection of 1/240 of the span.
4) Metal Wall Panels: Horizontal deflection of 1/240 of the span.
5) Design secondary-framing system to accommodate deflection of primary framing and construction tolerances, and to maintain clearances at openings.
6) Lateral Drift: Maximum of 1/200 of the building height.

B. Seismic Performance: Metal building system to withstand the effects of earthquake motions determined according to ASCE/SEI 7.

C. Thermal Movements: Allow for thermal movements from ambient and surface temperature changes by preventing buckling, opening of joints, overstressing of components, failure of joint sealants, failure of connections, and other detrimental effects. Base calculations on surface temperatures of materials due to both solar heat gain and nighttime-sky heat loss.

1. Temperature Change: 120 deg F, ambient; 180 deg F, material surfaces.

D. Fire-Resistance Ratings: Where assemblies are indicated to have a fire-resistance rating, provide metal panel assemblies identical to those of assemblies tested for fire resistance per ASTM E119 or ASTM E108 by a qualified testing agency. Identify products with appropriate markings of applicable testing agency.

1. Indicate design designations from UL's "Fire Resistance Directory," FM Global's "Approval Guide," or from the listings of another qualified testing agency.

E. Fire-Rated Door Assemblies: Assemblies complying with NFPA 80 that are listed and labeled by a qualified testing agency, for fire-protection ratings indicated, based on testing at positive pressure according to NFPA 252 or UL 10C.

F. Structural Performance for Metal Roof and Wall Panels: Provide metal panel systems capable of withstanding the effects of the following loads, based on testing according to ASTM E1592:

1. Wind Loads: As determined per ASCE 7-16 using a design wind speed of 153 mph.

G. Wind-Uplift Resistance: Provide metal roof panel assemblies that comply with UL 580 for wind-uplift-resistance class indicated.

1. Uplift Rating: UL 90.

2.4 STRUCTURAL-STEEL FRAMING

A. Recycled Content of Steel Products: Postconsumer recycled content plus one-half of preconsumer recycled content not less than 25 percent.

B. Structural Steel: Comply with AISC 360, "Specification for Structural Steel Buildings."

C. Bolted Connections: Comply with RCSC's "Specification for Structural Joints Using High-Strength Bolts."

D. Primary Framing: Manufacturer's standard primary-framing system, designed to withstand required loads and specified requirements. Primary framing includes transverse and lean-to frames; rafters, rake, and canopy beams; sidewall, intermediate, end-wall, and corner columns; and wind bracing.

1. General: Provide frames with attachment plates, bearing plates, and splice members. Factory drill for field-bolted assembly. Provide frame span and spacing indicated.

a. Slight variations in span and spacing may be acceptable if necessary to comply with manufacturer's standard, as approved by Architect.

2. Rigid Clear-Span Frames: I-shaped frame sections fabricated from shop-welded, built-up steel plates or structural-steel shapes. Interior columns are not permitted.

E. Canopy Framing: Manufacturer's standard structural-framing system, designed to withstand required loads; fabricated from shop-welded, built-up steel plates or structural-steel shapes. Provide frames with attachment plates and splice members, factory drilled for field-bolted assembly.

F. Anchor Rods: Headed anchor rods as indicated in Anchor Rod Plan for attachment of metal building to foundation.

G. Finish: Factory primed. Apply specified primer immediately after cleaning and pretreating.

1. Clean and prepare in accordance with SSPC-SP2.

2. Coat with manufacturer's standard primer. Apply primer to primary and secondary framing to a minimum dry film thickness of 1 mil.

    a. Prime secondary framing formed from uncoated steel sheet to a minimum dry film thickness of 0.5 mil on each side.

2.5 FABRICATION

A. General: Design components and field connections required for erection to permit easy assembly.

1. Mark each piece and part of the assembly to correspond with previously prepared erection drawings, diagrams, and instruction manuals.
2. Fabricate structural framing to produce clean, smooth cuts and bends. Punch holes of proper size, shape, and location. Members to be free of cracks, tears, and ruptures.

B. Tolerances: Comply with MBMA's "Metal Building Systems Manual" for fabrication and erection tolerances.

C. Primary Framing: Shop fabricate framing components to indicated size and section, with baseplates, bearing plates, stiffeners, and other items required for erection welded into place. Cut, form, punch, drill, and weld framing for bolted field assembly.

1. Make shop connections by welding or by using high-strength bolts.
2. Join flanges to webs of built-up members by a continuous, submerged arc-welding process.
3. Brace compression flange of primary framing with steel angles or cold-formed structural tubing between frame web and purlin web or girt web, so flange compressive strength is within allowable limits for any combination of loadings.
4. Weld clips to frames for attaching secondary framing if applicable, or punch for bolts.
5. Shop Priming: Prepare surfaces for shop priming according to SSPC-SP 2. Shop prime primary framing with specified primer after fabrication.

D. Secondary Framing: Shop fabricate framing components to indicated size and section by roll forming or break forming, with baseplates, bearing plates, stiffeners, and other plates required for erection welded into place. Cut, form, punch, drill, and weld secondary framing for bolted field connections to primary framing.

1. Make shop connections by welding or by using non-high-strength bolts.
2. Shop Priming: Prepare uncoated surfaces for shop priming according to SSPC-SP 2. Shop prime uncoated secondary framing with specified primer after fabrication.

2.6 SOURCE QUALITY CONTROL

A. Special Inspection: Owner will engage a qualified special inspector to perform source quality control inspections and to submit reports.

1. Accredited Manufacturers: Special inspections will not be required if fabrication is performed by an IAS AC472-accredited manufacturer approved by authorities having jurisdiction to perform such Work without special inspection.

    a. After fabrication, submit copy of certificate of compliance to authorities having jurisdiction, certifying that Work was performed according to Contract requirements.

PART 3 - EXECUTION

3.1 EXAMINATION

A. Examine substrates, areas, and conditions, with erector present, for compliance with requirements for installation tolerances and other conditions affecting performance of the Work.

B. Before erection proceeds, survey elevations and locations of concrete- and masonry-bearing surfaces and locations of anchor rods, bearing plates, and other embedments to receive structural framing, with erector present, for compliance with requirements and metal building system manufacturer's tolerances.

    1. Engage land surveyor to perform surveying.

C. Proceed with erection only after unsatisfactory conditions have been corrected.

3.2 PREPARATION

A. Clean and prepare surfaces to be painted according to manufacturer's written instructions for each particular substrate condition.

B. Provide temporary shores, guys, braces, and other supports during erection to keep structural framing secure, plumb, and in alignment against temporary construction loads and loads equal in intensity to design loads. Remove temporary supports when permanent structural framing, connections, and bracing are in place unless otherwise indicated.

3.3 ERECTION OF STRUCTURAL FRAMING

A. Erect metal building system according to manufacturer's written instructions and drawings.

B. Do not field cut, drill, or alter structural members without written approval from metal building system manufacturer's professional engineer.

C. Set structural framing accurately in locations and to elevations indicated, according to AISC specifications referenced in this Section. Maintain structural stability of frame during erection.

D. Base and Bearing Plates: Clean concrete- and masonry-bearing surfaces of bond-reducing materials, and roughen surfaces prior to setting plates. Clean bottom surface of plates.

1. Set plates for structural members on wedges, shims, or setting nuts as required.
2. Tighten anchor rods after supported members have been positioned and plumbed. Do not remove wedges or shims but, if protruding, cut off flush with edge of plate before packing with grout.
3. Promptly pack grout solidly between bearing surfaces and plates so no voids remain. Neatly finish exposed surfaces; protect grout and allow to cure. Comply with manufacturer's written installation instructions for shrinkage-resistant grouts.

E. Align and adjust structural framing before permanently fastening. Before assembly, clean bearing surfaces and other surfaces that will be in permanent contact with framing. Perform necessary adjustments to compensate for discrepancies in elevations and alignment.

1. Level and plumb individual members of structure.
2. Make allowances for difference between temperature at time of erection and mean temperature when structure will be completed and in service.

F. Primary Framing and End Walls: Erect framing level, plumb, rigid, secure, and true to line. Level baseplates to a true even plane with full bearing to supporting structures, set with double-nutted anchor bolts. Use grout to obtain uniform bearing and to maintain a level base-line elevation. Moist-cure grout for not less than seven days after placement.

1. Make field connections using high-strength bolts installed according to RCSC's "Specification for Structural Joints Using High-Strength Bolts" for bolt type and joint type specified.

   a. Joint Type: Snug tightened or pretensioned as required by manufacturer.

G. Secondary Framing: Erect framing level, plumb, rigid, secure, and true to line. Field bolt secondary framing to clips attached to primary framing.

1. Provide rake or gable purlins with tight-fitting closure channels and fasciae.
2. Locate and space wall girts to suit openings such as doors and windows.
~~2.~~ Provide supplemental framing at entire perimeter of openings, including doors, windows, louvers, ventilators, and other penetrations of roof and walls.

H. Install and connect bridging concurrently with joist erection, before construction loads are applied. Anchor ends of bridging lines at top and bottom chords if terminating at walls or beams.

I. Bracing: Install bracing in roof and sidewalls where indicated on erection drawings.

1. Tighten rod and cable bracing to avoid sag.
2. Locate interior end-bay bracing only where indicated.

J. Framing for Openings: Provide shapes of proper design and size to reinforce openings and to carry loads and vibrations imposed, including equipment furnished under mechanical and electrical work. Securely attach to structural framing.

K. Erection Tolerances: Maintain erection tolerances of structural framing within AISC 303.

3.4 METAL PANEL INSTALLATION, GENERAL

A. On-Site Fabrication: Subject to compliance with requirements of this Section, metal panels may be fabricated on-site using UL-certified, portable roll-forming equipment if panels are of same profile and warranted by manufacturer to be equal to factory-formed panels. Fabricate according to equipment manufacturer's written instructions and to comply with details shown.

B. Examination: Examine primary and secondary framing to verify that structural-panel support members and anchorages have been installed within alignment tolerances required by manufacturer.

1. Examine roughing-in for components and systems penetrating metal panels, to verify actual locations of penetrations relative to seams before metal panel installation.

C. Metal Protection: Where dissimilar metals contact each other or corrosive substrates, protect against galvanic action by painting contact surfaces with corrosion-resistant coating, by applying rubberized-asphalt underlayment to each contact surface, or by other permanent separation as recommended by metal roof panel manufacturer.

3.5 FIELD QUALITY CONTROL

A. Special Inspections: Owner will engage a qualified special inspector to perform field quality control special inspections and to submit reports.

B. Product will be considered defective if it does not pass tests and inspections.

C. Prepare test and inspection reports.

3.6 CLEANING AND PROTECTION

A. Repair damaged galvanized coatings on galvanized items with galvanized repair paint according to ASTM A780/A780M and manufacturer's written instructions.

B. Touchup Painting:

1. After erection, promptly clean, prepare, and prime or reprime field connections, rust spots, and abraded surfaces of prime-painted structural framing, bearing plates, and accessories.

a. Clean and prepare surfaces by SSPC-SP 2, "Hand Tool Cleaning," or by SSPC-SP 3, "Power Tool Cleaning."
b. Apply a compatible primer of same type as shop primer used on adjacent surfaces.

2. Cleaning and touchup painting are specified in Section 099113 "Exterior Painting" and Section 099123 "Interior Painting."

END OF SECTION 133419

2.5 BUILDINGS DESIGN CRITERIA (BDC)

2.5.1 Scope

This document summarizes the codes, standards, and practices that will be used in the design and construction of the buildings within the scope (summary below) for the GE/Southern/Linde – Advanced NGCC Integration Project in Bucks, AL.

These are general practices and are not intended to supplement good engineering judgement. The design engineer and/or architect shall determine application of the design criteria to any given situation and shall determine whether an alternative approach is warranted.

This design criteria document includes the Admin/Control building on site.

2.5.2 Design Codes, Standards

As a minimum, all structures shall be designed in accordance with the requirements or recommendations contained in the Codes and Standards mentioned in the Design Basis document. When an edition date is not indicated, the latest edition and addenda in effect at time of plant design shall apply. Applicable building codes are subject to change based on the authority having jurisdiction. This proposal is based on the 2018 International Code Council codes as adopted by Mobile County as the basis for contract.

2.5.3 General Notes

The contractor assumes all existing mechanical, hvac, electrical, and plumbing systems, equipment, etc, within the existing buildings are operable and can be reused as part of design. If any of these systems are found to be inoperable or damaged, requiring replacement, they will be replaced at an additional cost.

2.5.4 Architectural Basis of Design

The architectural scope of work covered in this proposal includes all facilities listed above in the Buildings Design Criteria Scope. None of these facilities are assumed to contain or be adjacent to hazardous materials exceeding the maximum allowable quantities according to the International Building Code, and thus are not designed to be Hazardous occupancies. All facilities described within this document are enclosed with metal panels compliant with the energy code For building dimensions, materials, programming, insulation, and other detailed information, refer to the attached drawings unless noted otherwise in this document. For stairs, equipment platforms, and structural information, please see the Structural Design Criteria document and any of its associated documents. Buildings and other facilities shall be designed to accommodate staffing numbers and utilization of facilities based on normal operations, inclusive of scheduled turnarounds.

Architectural Exclusions

The following items are excluded from the contractor's scope of work: floor paintings or markings, furniture, stoves, fridges, microwaves, and other break room appliances. FM Global requirements.

Building Occupancy Classification:

a. Building occupancy classification shall be determined based on 2018 International Building Code, NFPA 101, Life Safety Code.

Exterior Wall Systems:

a. Insulated metal panel that meets the minimum ASHRAE 90.1 2016 requirements with galvanized steel skin, coated with Hylar/Kynar 500 or equivalent finish on the exterior and finished with the manufacturer's standard baked-on enamel finish on the interior.

Exterior Roof Systems:

a. Insulated metal panel standing seam that meets the minimum ASHRAE 90.1 2016 requirements with galvanized steel skin, coated with Hylar/Kynar 500 or equivalent finish on the exterior and finished with the manufacturer's standard baked-on enamel finish on the interior. The completed roofing system will conform to UL requirements for Class A roofs and wind uplift resistance per UL 580 (ASTM E 1592) Class 90. Include gutters, downspouts, and splash blocks. Panel system shall meet all energy code requirements.

Interior Wall Partitions:

a. 5/8" gyp board (moisture resistant at non-tiled wet walls) on 20-gauge G90 galvanized metal studs spaced 16" O.C. up to 18'-0" tall max.
b. 5/8" tile backer board on 18-gauge G90 galvanized metal studs spaced 16" O.C. at wet wall tiled areas only up to 18'-0" tall max.
c. 5/8" type "X" FIRE RATED gyp board on 18-gauge G90 galvanized metal studs spaced at 16" O.C. at fire rated partitions only up to 18'-0" tall max.
d. Shower / Toilet partitions HDPE.

General Notes Architectural Items:

DCS Room:

a. Kiewit – process electrical to provide equipment.
b. Floor shall have access flooring with static dissipative tile

Mechanical/Electrical:

a. Shall provide (1) mop sink in mechanical room
b. (1) drinking fountain is to be located immediately on the exterior of the mechanical room.
a. Restrooms:
a. Walls shall be insulated for sound transmission.
b. Walls shall be painted gypsum board above a 4' high glazed ceramic tile wainscot.
c. Coved base shall be provided at the intersection of the wainscot and the floor tile.
d. Shall be designed to meet the requirements of ADA.
e. Shall have single basin sinks.
f. Shall have a floor drain.
g. Will be comprised of (4) unisex restrooms.
h. Sanitary napkin holders in all (4) unisex restrooms.
i. (1) ADA-compliant shower shall be in each of (2) unisex restrooms.

Offices/Reception:

a. (2) closed offices.
b. Furniture shall be provided by Owner.

Control Room:

a. Shall accommodate 1-2 people.
b. Main desk with support stations (2 in the middle and 2 on the sides)
c. Man door exit for direct access to plant
d. Large window to look toward plant in control area.
e. Floor shall haveaccess flooring with static dissipative tile.
f. Includes upper and base cabinets with countertop for office storage.
g. Printer and copy machine provided by Owner.

Break Room:

a. Appliances, vending machines, and furniture shall be provided by Owner.
b. Shall have double bowl sink.
c. Includes upper and base cabinets
d. Space for vending machines

Conference Room

a. Storm Hardened Shelter
b. Shall accommodate 8 people
c. Tv shall be 60+"
d. Credenza space for coffee/ snacks
e. Furniture shall be provided by GE

Locker Room/ Changing Room:

a. Design shall include 16 half lockers. (1) ADA Locker.
b. ADA Benches
c. (2) changing rooms. One shall be utilized as a wellness/ mother's room with a sink and mini refrigerator.
d.

Windows:

a. Standard Exterior Windows shall be manufacturer-standard thermal-break aluminum, clear anodized, factory tinted, non-operable windows. Exterior glazing to be insulated, (1") tinted reflective glass.

Doors:

a. a) All personnel doors shall meet ANSI/SDI A250.8-2017 standards.
    i. Exterior doors- Level 3 minimum
    ii. Interior doors- Level 2 minimum
    iii. Card readers at exterior doors, Control room, and DCS room as indicated on Electrical drawings.
b. Exterior hollow metal
    i. Exterior doors shall be flush, hollow metal steel with hollow metal steel door frames complete with half windows (where shown on the exterior elevations), hinges, locksets, closers, weather-stripping, and accessory hardware. Exterior doors and frames shall be factory primed and field painted with two coats of alkyd paint finish. Fire Rated doors where required.
c. Interior hollow metal
    i. Interior personnel doors will be flush, hollow metal steel with hollow metal steel door frames complete with vision panels (fire rated where required), hinges, locksets, closers, weather-stripping, and accessory hardware. Interior doors and

frames shall be factory primed and field painted with two coats of latex paint finish. Fire Rated doors where required.

Storm shelter doors: Refer to Storm Hardened Shelter criteria. Fire Detection and Suppression

a. Fire alarm and smoke detection systems shall be provided per applicable codes.
b.

General Interior Finishes:

a. Interior finishes are shown in the finish schedule for each building, as applicable.

Storm Hardened Shelter:

a. Special Inspections shall be provided as needed.
b. Foundations shall not be tied to adjacent structural components.
    a. For purposes of bidding only, assume foundations are 24" wide and 42" deep, with (2) #5 Top Bars, (2) #5 Bottom Bars, and (2) #5 Side Bars, with #3 Stirrups at 48" O.C.
c. Walls shall be 8'' CMU, fully grouted, with #5 rebar continuous at 16'' O.C. Bond beam at top of wall with (1) #5 rebar, continuous.
d. Lid shall be of cast-in-place reinforced concrete.
e. Walls and Lid shall be structurally designed to prevent surrounding construction that collapses onto the shelter from compromising or crushing the shelter.
    a. For purposes of bidding only, assume walls are 8'' CMU, fully grouted, with #5 vertical rebar continuous at 16'' O.C. Bond beam at top of wall with (1) #5 rebar, continuous. Assume lid is 8" thick with #4 rebar at 12" O.C. both directions, top and bottom, and tied to the wall with 3' x 3' #4 rebar legs at 24" O.C.
f. Doors, Frames and Hardware shall be of one system from one manufacturer, listed and labeled showing assembly compliance with ICC 500 and FEMA 320/361.
g. Windows tested, certified, and listed by UL under their Windstorm-Rated Assemblies Program meeting ICC500-2014 and FEMA361-2015 requirements for use in tornado and hurricane shelters in the 250mph wind zone. Insulgard's STORMDEFEND TTH600 Window system.
h. Penetrations for ductwork shall be fitted with a steel boot constructed of ¼" steel plate, welded, with HSS 3x3x1/4 reinforcement in any direction that exceeds 24", and shall be structurally engineered to meet impact test requirements at 250 mph wind speed. Boot shall be of dimensions sufficient to prevent debris from taking a direct path into the room.
i. Penetrations through storm shelter envelope larger than 3-1/2 square inches for rectangular openings, or 2-1/6" diameter shall be considered openings and shall be provided with an Opening Protective Device.
    a. For purposes of bidding only, assume Opening Protective Device is made of ¼" steel plate, overlapping opening by 8", with post-installed 5/8" fasteners at 16" O.C. maximum.

Project Specifications

a. 06-1000 Rough Carpentry

b. 07-2100 Thermal Insulation
c. 07-4113.13 Formed Metal Roof Panels
d. 07-4213.13 Formed Metal Wall Panels
e. 07-6200 Sheet Metal Flashing and Trim
f. 07-7200 Roof Accessories
g. 07-8413 Penetration Firestopping
h. 07-9200 Joint Sealants
i. 08-1113 Hollow Metal Doors and Frames
j. 08-7100 Door Hardware
k. 08-8000 Glazing
l. 09-2900 Gypsum Board
m. 09-6513 Ceramic Tile
n. 09-5113 Acoustical Panel Ceilings
o. 09-6513 Resilient Base and Accessories
p. 09-6900 Access Flooring
q. 09-9123 Interior Painting
r. 10-1423.16 Room - Identification Panel Signage
s. 10-2800 Toilet, Bath and Laundry Accessories
t. 10-4413 Fire Protection Cabinets
u. 10-44416 Fire Extinguishers
v. 10-5113 Metal Lockers
w. 12-3216 Manufactured Plastic Laminate Clad Casework
x. 12-3661.16 Solid Surfacing Countertops
y. 13-3419 Metal Building Systems

2.5.5 Plumbing Basis of Design

PLUMBING SCOPE OF WORK

1) The plumbing system design for the new admin building will be designed in accordance with the latest edition of the National Standard Plumbing Code-2018, (AL ed) and other local plumbing codes. The number of plumbing fixtures will be per the occupancy load in the building.

PROJECT SPECIFICATIONS

1) Refer to the plumbing drawings, note, and schedules for equipment and material specifications. CSI level specifications will be developed during detail design.

2.5.6 Building Mechanical

General HVAC Design Criteria

a. Design Temperatures
   1. ASHRAE Weather Station: Mobile, AL (WMO:722230)
   2. Summer design dry bulb temperature: 94.2°F
   3. Summer design wet bulb temperature: 77.1°F
   4. Winter design temperature: 27.5°F

HVAC DESIGN CRITERIA

HVAC DESIGN CRITERIA

Area	Cooling Design Temp. (°F)	Heating Design Temp. (°F)	Humidity Control %RH	Minimum Ventilation Rate	Outdoor Air Particulate Filtration Efficiency %	Pressurization	Redundancy
NEW ADMIN BUILDING							
Conference, Break room, offices, vestibules, corridor	75	68	<65%	ASHRAE 62.1	MERV 8	Positive	2x100%
Electrical room	77	70	<65%	ASHRAE 62.1	MERV 8	Positive	2x100%
Locker Rooms, Mech/Janitor	75	68	<65%	ASHRAE 62.1	MERV 8	Negative	2x100%
DCS / Control Room	75	68	<65%	ASHRAE 62.1	MERV 8	Positive	2x100%

a) Design shall be in accordance with ASHRAE standards. The HVAC systems shall be designed per applicable codes, standards, listed in the section HVAC Design Standards / References and shall be installed to provide an environment within the buildings suitable for continuous equipment operation. These HVAC systems shall be designed to maintain proper levels of temperature, air movement, air removal, and fresh air supply.

b) The HVAC systems shall consist of unitary equipment for building heating, building ventilation for fresh air make-up and cooling, and direct expansion cooling-type air-conditioning as required.

c) The heat rejection of one unit shall not be directed to the inlet of another unit, the general arrangement of units shall maintain sufficient distance between units as directed by the manufacture.
d) Locker Rooms, Elec, and Mech/Janitor will maintain a negative pressure relative to adjacent spaces. No return air from these spaces.
e) Exterior and interior air conditioning ductwork shall be insulated.
f) All outdoor air intakes and exhausts shall be equipped with low-leakage isolation motorized damper that are tied to the Building Automation System (BAS) control interlock. These outdoor air intakes, low leakage isolation motorized dampers shall close, and subsequent HVAC Equipment actions will follow, upon gas detection through the Fire & Gas Detection system. The final assessment and design to account for an outside air stack will be performed during EPC phase and a CFD study of the gas dispersion, as required.
g) Air conditioning shall include both heating and cooling of the inlet filtered air.
h) All outdoor air in air-conditioned spaces shall be filtered with a MERV 8 filter.
i) If the building is located, in a blast rated area, the exterior louvers/dampers shall be blast rated, internal to the blast louver shall be a blast damper to isolate the blast loads. Building Blast design data are pending a Building siting Overpressure study during EPC phase, as required.
j) The BAS shall automatically lead/lag the redundant HVAC units on a 7-day schedule. In the event of an equipment failure, the BAS shall automatically transfer to the stand- by system.
k) All ductwork and piping that penetrates a fire wall shall include fire rated sealant applicable to the fire rating of the wall that is being penetrated.
l) All motorized dampers on site shall be low leakage isolation dampers with limit switches to prove position.
m) The building on site shall have a full BAS system with graphical floor plans along with individual sequences for each piece of operating equipment.
n) All HVAC alarms shall be connected to the control room in the Multipurpose Building for remote monitoring.
o) Redundant HVAC Equipment shall account for scenarios, such that loss of one unit shall not lower the HVAC performance. In case of failure of the Duty unit, a fault alarm to the shall be generated to the HVAC Control Panel and consequently the standby unit shall take over its operation.

ADMIN BUILDING DESIGN

1) Design Conditions and Load Assumptions:
    a) The HVAC design conditions for the building area are based on the Internal Heat Gains, manufacturer cut sheets, and ASHRAE Handbook Fundamentals standard loads where Internal Heat Gains, are pending finalization during EPC Phase.
2) HVAC System Design:
    a) The ventilation rate will be the largest required between ASHRAE 62.1 and total exhaust + exfiltration, to maintain building positive pressure.

b) The portion of the building, which includes all offices, breakroom, Mech/Jan Storage, Conference, Corridor, Vestibules, Maintenance, Locker rooms, shall be conditioned by one packaged air handler unit, which include air filtration, DX cooling, and Electric heating. The air handlers shall each have a supply fan with a variable frequency drive (VFD) and provide air to variable air volume (VAV) boxes with electric reheat. The packaged air handler will be mounted outside the building on the ground on an equipment housekeeping pad. Outside air intake shall have a low leakage Isolation motorized damper. Vestibules in the admin areas will be heated by wall mounted cabinet electric unit heaters. The Control, DCS, Elec Rooms will be served by redundant packaged air handler units (same unit system description).

c) Each locker room and Mech/Janitor Room area shall be provided with separate a direct-drive centrifugal exhaust fans with low leakage isolation motorized damper, near the exterior wall louver

3) Type of HVAC Equipment:
   a) Packaged Air Handling Unit (AHU)
   b) Variable air volume (VAV) boxes
   c) Centrifugal exhaust fan

4) HVAC Controls:
   a) Refer to section above, “Design Requirements” for further Controls information
   b) HVAC controls shall be provided from a centrally located HVAC control panel and alarm to the Control Room DCS system. DCS network wiring to the control room for all alarms shall be installed by plant EPC contractor or Other.
   c) The HVAC controls shall include a graphical floor plan and Graphical User Interface (GUI) touch screen panel for control.
   d) Some HVAC Control Panel interfaces/signals:

      i) Fire Alarm Control Panel (FACP)
         1. HVAC Shutdown signal from FACP to HVAC Control Panel

      ii) Fire and Gas System Panel (FGS)
         1. Gas detection at OA intake
         2. Upon 20% LFL detection
            a. FGS panel sends a recirculation signal to HVAC Control Panel for action
            b. AHU’s close OA isolation motorized damper and go into recirculation mode, were Air conditioning proceeds with recirculated air only.
            c. EF’s shutdown and close isolation motorized damper
         3. Upon 40% LFL detection
            a. FGS panel sends a shutdown signal to HVAC Control Panel for action
            b. All HVAC equipment, such as: AHU’s, EF’s will shut down and associated motorized isolation dampers will close.

      iii) Safety Instrument System (SIS)
         1. SIS system will send HVAC system shut down signal to the HVAC Control Panel, upon confirmed fire inside of the building.

iv) Elec Room controls:
1. Wall-mounted temperature sensor
2. High space temperature alarm to HVAC Control Panel
3. Loss of ventilation alarm to HVAC Control Panel
4. Equipment fault alarm to HVAC Control Panel

HVAC DESIGN STANDARDS / REFERENCES

1) American Society of Heating, Refrigeration, and Air Conditioning Engineers (ASHRAE)
2) ASHRAE Handbooks
3) ASHRAE 62.1 Ventilation for Acceptable Indoor Air Quality
4) ASHRAE 90.1-2016 Energy Standard for Buildings Except Low-Rise Residential Buildings
5) IMC 2018 International Mechanical Code
6) Sheet Metal and Air Conditioning Contractors' National Association (SMACNA)
7) SMACNA HVAC Duct Construction Standards
8) NFPA 90A Standard for the Installation of Air-Conditioning and Ventilating Systems
9) API 500 Recommended Practice for Classification of Locations for Electrical Installations

HVAC EQUPMENT DESCRIPTION

1) Packaged AHUs:
   a) Packaged DX A/C Units complete w/ Electric Heat with SCR, Hot Gas Reheat, Variable Speed Compressors for Dehumidification Control, Low Ambient Kits, Disconnects, Filtration, VFDs, and 480/3/60 electrical service. Suitable for High Wind areas, such as Hurricanes, etc., (and as required by codes). Unit shall be suitable for coastal/marine outdoor environment
2) Ductwork:
   a) Galvanized Sheet Metal duct per SMACNA specifications. All supply ducts inside the building shall be external wrap type insulation. All ducts outside the bldg. shall be c/w board type insulation with weatherproofed jacket and suitable for outdoors (Coastal/marine environment) and High Wind areas, such as Hurricanes, etc. (as required by codes).
3) Wall Fans:
   a) Direct Drive or Belt Drive Wall Fans complete with Motor Guards, Low Leakage Motorized Dampers, Wall Collar, Bird screen, adjustable speed control, 480/3/60 electrical service, and shipped loose fan Manufacturer Combo Fan Motor Starter/Disconnects. Suitable for High Wind areas, such as Hurricanes, etc. (and as required by codes). Unit shall be suitable for coastal/marine outdoor environment.

2.5.7 Building Electrical

General

The design will be based upon the current building codes as adopted by the local Authority Having Jurisdiction, as well as the applicable codes and standards. Where conflicts between applicable codes or standards arise, the most stringent interpretation will be followed.

All electrical materials and equipment will be listed and labeled by a qualified testing agency in the US and provided with a manufacturer-applied label indicating as such.

All equipment, devices, and materials will be selected based on the environment in which they will be installed, in compliance with code requirements and manufacturer listings. All chosen electrical system components will, at a minimum, be capable of normal operation in the maximum ambient temperature range of their installed environment. Temperature ranges will be coordinated with the HVAC design.

Each type of device or equipment will be specified to be procured from a single manufacturer wherever possible.

Unless noted otherwise, enclosure types will be provided as: NEMA 1 for dry indoor areas with filtered supply air, NEMA 12 for dry indoor areas without filtered supply air, NEMA 3R for outdoor areas, NEMA 4 for indoor wet areas, and NEMA 4X for indoor/outdoor corrosive or wash down areas. Ratings for enclosures in hazardous areas will be provided as appropriate for each area classification and per the NEC.

Unless noted otherwise, all electrical provisions for process equipment and systems will be documented in.

Power Distribution

480V 3-phase 3-wire or 4-wire panelboards will serve 480V HVAC equipment, bridge cranes, motorized hoists, overhead doors, welding receptacles, elevators, etc.

Transformation of 480V, 3-phase, 3-wire power to 208Y/120V, 3-phase, 4-wire power shall be provided by step-down transformers fed from the 480V panelboards.

208Y/120V, 3-phase, 4-wire panelboards shall be fed from the step-down transformers and serve 120V lighting loads, HVAC equipment unable to be supplied at 480V, motors 1/2HP and smaller, convenience receptacles, fire alarm panels, lighting, and other miscellaneous small power loads.

All distribution system components will be sized to be capable of accommodating approximately 20% future load growth (% of equipment total capacity) where feasible.

Unless noted otherwise, this electrical distribution equipment will be used only to power loads documented in the building deliverables and is not intended to accommodate any process type loads.

Building electrical distribution equipment will be located in air-conditioned electrical rooms wherever possible, otherwise equipment will be located in ventilated interior areas. Equipment will not be located outdoors, in corrosive environments, or in hazardous classified areas unless no reasonable interior location is possible.

All breakers shall have fully-rated short circuit ratings capable of interrupting the calculated short circuit current plus approximately 10%. Panelboards will be braced for at least the same short circuit current value. Approximately 10% spare breakers will be provided (% of panelboard total pole quantity).

Surge protection will be provided at each main building panelboard/switchboard when a lightning protection system is provided.

Power Cabling and Conductors

All conductor sizes will be determined per NEC requirements, accounting for local temperatures, voltage drop, and other deratings as necessary. All conductors will be designed as copper. The minimum conductor size will be #12 AWG. All cabling will be routed in raceway (conduit or tray), with the exception of MC cable.

Grounding

Sizing of all grounding and bonding conductors will be in accordance with NEC requirements. All grounding and bonding conductors will be designed as copper.

The building electrical distribution system grounding will tie into the project grounding grid. Building steel will also tie into the grounding grid via connections to perimeter steel columns.

All feeders and branch circuits will be provided with an insulated equipment grounding conductor with the same insulation ratings as the current-carrying conductors.

All 208Y/120V step-down transformers will be solidly grounded.

Lightning Protection

A project-wide lightning protection study will be performed. A lightning protection system will be provided for each building in compliance with NFPA 780, unless it is determined during the lightning protection study that the building is protected by other structures. The lightning protection system will tie into the project grounding grid.

Lightning protection component materials will be selected to minimize the potential of galvanic corrosion.

Raceway

All raceways will be sized per NEC requirements at a minimum. Minimum size will be 3/4", except where final connections to devices or fixtures only allow 1/2".

In finished areas, boxes will be recessed, and raceways concealed. In unfinished areas and exterior areas, boxes and raceways will be surface mounted using slotted support systems.

Identification

All distribution equipment will be provided with identification tags in compliance with the project tagging procedure.

Wiring Devices

Convenience receptacles will be provided such that no point within the building is more than 50 feet away from a receptacle. In finished areas other than transitional ones (e.g. hallways), typically at least one duplex receptacle will be provided on each wall over five feet in length. At least one receptacle will be provided on each exterior façade where possible. Exterior receptacles, and any located within indoor wet locations, will be GFCI weather-resistant type as required by the NEC, and provided with cast metal in-use cover. Hazardous area receptacles will be provided only where necessary.

Welding receptacles will be 60A 480V 3-wire 4-pole with a designated ground pin and fused disconnect switch unless noted otherwise. Final number and location of welding receptacles will be mutually agreed upon with the Owner during the design process. Welding receptacles shall be wired no more than two to a circuit.

Lighting and Lighting Control

Lighting will be designed in compliance with IES recommendations and per IBC, NFPA 101 and NEC requirements.

Normal lighting will be provided for all interior areas and at exterior man doors and overhead doors. Emergency lighting will be provided for interior areas and at exterior egress doors. Exit signage will be provided in interior spaces as required by the IBC.

All lighting will be LED type. Interior lighting will be provided using commercial grade recessed fixtures in finished areas. Air-conditioned unfinished areas will be provided with pendant or surface mounted commercial or industrial grade fixtures. Exterior lighting will be provided as wall mounted commercial or industrial grade fixtures.

Emergency lighting will be provided via emergency lighting units with integral batteries and dual lamp LED heads. Exit signs will be self-illuminating with integral batteries.

All lighting controls will be provided in compliance with the locally-adopted energy code. In general, occupancy-sensing controls will be provided in finished interior areas, and in administration/control unfinished areas where controls failure would not be a safety concern. 100%-10% dimming controls will also be provided in normally occupied finished spaces such as control rooms and offices, and in various other rooms where dimming would be useful. Exterior lighting will be controlled via a photocells.

Communications, Security, Controls Systems

Rough-in (conduit, boxes) will be provided as needed in finished walls and ceilings for communication, security and control system components. Cabling and jacks will be provided for all communications outlet locations. Patch panels will be provided for cable termination and testing.

Calculations

Lighting calculations will be performed for both normal and emergency lighting using AGi32 by Lighting Analysts or similar software.

Voltage drop calculations will be performed for the building electrical distribution system as well as branch circuits.

Short circuit calculations will be performed for the building electrical distribution to confirm equipment AIC ratings.

Building feeder load summaries, panelboard loading, and branch circuit loading will be calculated per NEC requirements.

Energy code compliance calculations will be performed as required by local code.

Admin Control Building - Specific Provisions

One (1) 480V 3-phase 3-wire feeder shall be brought to the building. Additionally, a main 480V interior panelboard with main circuit breaker, and all necessary downstream electrical distribution equipment including, but not limited to, 480V sub-panelboards, transformers, 208/120V panelboards, feeders, and necessary downstream equipment as required shall be provided. The incoming building feeder shall be terminated at the main panelboard's MCB.

Power will be provided to owner-furnished appliances in the Breakroom.

Cabling grommets will be provided in control area as required for workstation power and control circuits. The access floor system will be grounded in accordance with manufacturer recommendations.

LIFE SAFETY LEGEND

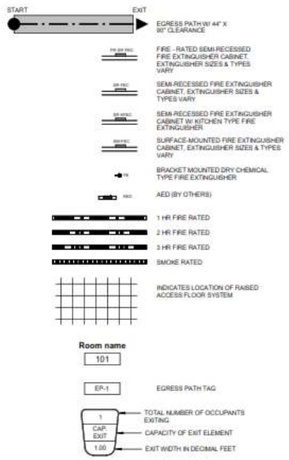

EGRESS PATH...

Group Mark	TOTAL DISTANCE
EP-01	33' - 1 1/16"
EP-02	41' - 3"
EP-03	59' - 9 3/16"
EP-04	37' - 8 1/16"

FIRE EXTINGUISHER LEGEND

NFPA SYMBOL	TYPE	DESCRIPTION	SIZE
K	CLASS K	PORTABLE FIRE EXTINGUISHER	1.6 GAL (6 LITER) MIN
A B C	CLASS ABC, 4-A:80-B:C	DRY CHEMICAL EXTINGUISHER FOR ALL TYPES EXCEPT METALS	10 LBS MIN
B C	CLASS BC, 5-B:C	CLEAN AGENT EXTINGUISHER	5 LBS MIN

EXTINGUISHER MOUNTING TYPE	
F.E	BRACKET MOUNTED FIRE EXTINGUISHER
SR-FEC	SEMI- RECESSED FIRE EXTINGUISHER CABINET
SM-FEC	SURFACE MOUNTED FIRE EXTINGUISHER CABINET
FR-FEC	FIRE RATED, SEMI-RECESSED, FIRE EXTINGUISHERCABINET

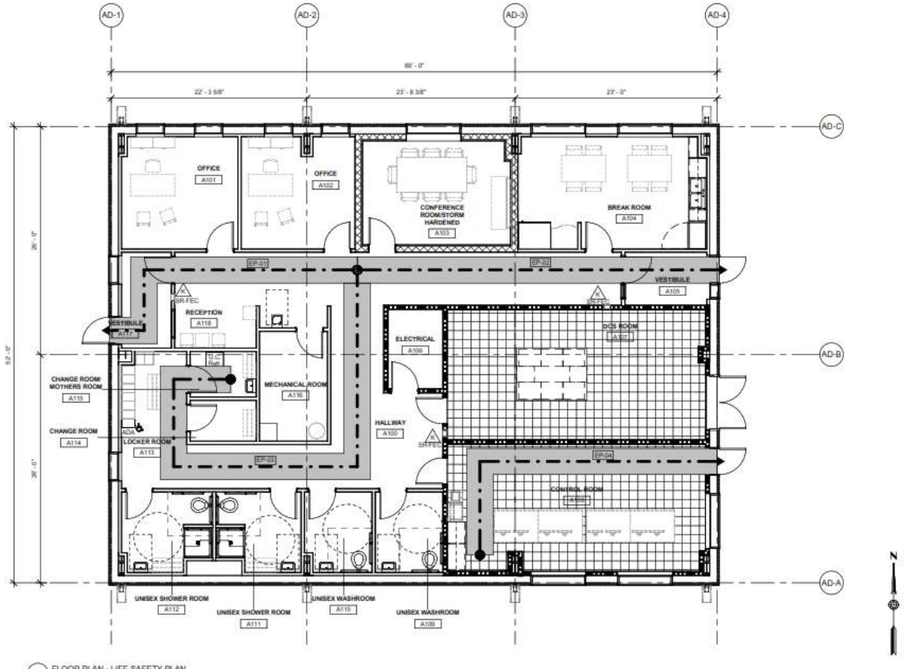

1 FLOOR PLAN - LIFE SAFETY PLAN
3/16" = 1'-0"

BUILDING CODE ANALYSIS MATRIX

PROJECT SUMMARY

THIS FACILITY IS A 1-STORY PRE-ENGINEERED METAL BUILDING STRUCTURE WITH METAL CLADDING AND INSULATION FOR WALLS AND ROOF.

APPLICABLE BUILDING CODES & LOCAL AMENDMENTS:

IBC 2018 - INTERNATIONAL BUILDING CODE
IFC 2018 - INTERNATIONAL FIRE CODE
IMC 2018 - INTERNATIONAL MECHANICAL CODE
IPC 2018 - INTERNATIONAL PLUMBING CODE
2017 NEC - NATIONAL ELECTRIC CODE
IFGC 2018 - INTERNATIONAL FUEL GAS CODE
NFPA 101 EDITION 2018 - LIFE SAFETY CODE
NFPA 10 EDITION 2018 - STANDARD FOR PORTABLE FIRE EXTINGUISHERS
NFPA 13 EDITION 2018 - STANDARD FOR THE INSTALLATION OF SPRINKLER SYSTEMS
2010 ADA AMERICANS WITH DISABILITIES ACT STANDARDS FOR ACCESSIBLE DESIGN
ICC A117.1-20XX - STANDARD FOR ACCESSIBLE AND USABLE BUILDINGS & FACILITIES
29-CFR PART 1910 - OCCUPATIONAL SAFETY AND HEALTH STANDARDS
ICC 500-2020 ICC/NSSA - STANDARD FOR THE DESIGN AND CONSTRUCTION OF STORM SHELTERS
ANSI/ASHRAE/IESNA STANDARD 90.1 - ENERGY STANDARD FOR BUILDINGS EXCEPT LOW-RISE RESIDENTIAL

ITEM	REMARKS		
	PER IBC CHAPTER 3	PER NFPA 101 CHAPTER 6	
BUILDING OCCUPANCY CLASSIFICATION	B	B	
	PER IBC CHAPTER 2	PER NFPA 400 3.3.4.1	
CONTROL AREAS, DEFINED	CONTROL AREAS ARE SPACES WITHIN A BUILDING WHERE QUANTITIES OF HAZARDOUS MATERIALS NOT EXCEEDING THE MAXIMUM ALLOWABLE QUANTITIES PER CONTROL AREA ARE STORED, DISPENSED, USED OR HANDLED.	CONTROL AREA IS A BUILDING OR PORTION OF A BUILDING OR OUTDOOR AREA WITHIN WHICH HAZARDOUS MATERIALS ARE ALLOWED TO BE STORED, DISPENSED, USED OR HANDLED IN QUANTITIES NOT EXCEEDING THE MAXIMUM ALLOWABLE QUANTITIES.	
AS DESIGNED (TABLE 414.2.2)	0 CONTROL AREA(S)		
FIRE RESISTANCE RATING OF ENCLOSURE (SECTION 414.2.1 & 414.2.4)	N/A		
	N/A		
SPECIAL REQUIREMENTS BY OCCUPANCY & USE (CHAPTER 4)	N/A		
	N/A		
CONSTRUCTION (TABLE 601)	TYPE II-B		

ALLOWABLE BUILDING HEIGHT, STORIES, AREA (TABLES 504.3, 504.4 & 506.2)	OCCUPANCY	HEIGHT	STORIES	ALLOWED AREA
	B	75'-0"	4	69,000 SF

DESIGNED BUILDING HEIGHT, STORIES, AREA	OCCUPANCY	HEIGHT	STORIES	DESIGNED AREA
	B	15'-0"	1	3,390 SF

REQUIRED SEPARATION OF OCCUPANCIES (TABLE 508.4)	N/A

FIRE - RESISTANCE RATING REQUIREMENTS (TABLE 601)	BUILDING ELEMENT		HOURLY RATING
	PRIMARY STRUCTURAL FRAME		0
	BEARING WALLS	EXTERIOR	0
		INTERIOR	0
	NON-BEARING WALLS & PARTITIONS INTERIOR		0
	FLOOR CONSTRUCTION & ASSOCIATED SECONDARY MEMBERS		0
	ROOF CONSTRUCTION & ASSOCIATED SECONDARY MEMBERS		0

FIRE RESISTANCE RATING FOR EXTERIOR WALLS BASED ON FIRE SEPARATION DISTANCE (TABLE 705.5)	FIRE SEPARATION DISTANCE = X (FEET)	CONSTRUCTION	OCCUPANCY	REQUIRED FIRE-RESISTANCE RATING (HOURS)
	10 < X < 30	TYPE IIB	B	0

RATING FOR SUPPORTING CONSTRUCTION (SECTION 707)	0 HOUR(S) FOR FLOOR & STRUCTURAL ELEMENTS ALONG LOAD PATH SUPPORTING FIRE BARRIERS
RATING FOR HORIZONTAL ASSEMBLIES (SECTION 711)	0 HOUR(S) FOR HORIZONTAL FLOOR & ROOF ASSEMBLIES
SHAFT ENCLOSURES (SECTION 713.4)	1 HOUR(S) FOR ELEVATOR & UTILITY SHAFTS WHERE LESS THAN 4 STORIES
CORRIDORS (TABLE 1020.2)	0 HOUR(S) FOR B OCCUPANCY, WITH XX OCCUPANT LOAD SERVED, IN FULLY SPRINKLERED BUILDING
STAIR ENCLOSURES (1023.2)	1 HOUR(S) FOR INTERIOR EXIT STAIRWAYS WHERE CONNECTING LESS THAN 4 STORIES
FIRE SUPPRESSION (SECTION 903.3.1.1)	FULLY SPRINKLERED: YES

ITEM	REMARKS			
	MIN. RATING	PROJECT AREA	MAX. AREA	MAX. TRAVEL DISTANCE
PORTABLE FIRE EXTINGUISHERS: (SECTION 906 & NFPA 10 TABLES 6.2.1.1 & 6.3.1.1)	2-A	OFFICE	6,000 SF	75 FT

MAXIMUM FLOOR AREA PER OCCUPANT (TABLE 1004.5)	OCCUPANCY	FUNCTION OF SPACE	OCCUPANT LOAD FACTOR
	B	BUSINESS AREAS	150 GROSS SF
	B	CONTROL ROOMS	150 GROSS SF

DESIGN OCCUPANT LOAD (SECTION 1004)	FLOOR LEVEL	OCCUPANCY	MAX. AREA	OCCUPANT LOAD
	LEVEL 1	B	3,390 SF	23

ACTUAL OCCUPANT LOAD (SECTION 1004.5 EXCEPTION & 2902.1)	FLOOR LEVEL	OCCUPANCY	MAX. AREA	OCCUPANT LOAD
	LEVEL 1	B	3,390 SF	23

EGRESS SIZING (REFER TO SECTIONS 1005.3.1 & 1005.3.2)	STAIRWAYS: 44" MIN. CLEAR BETWEEN HANDRAILS OR INDIVIDUAL STAIR OCCUPANT LOAD MULTPLIED BY 0.3" FOR INDIVIDUAL STAIR OCCUPANT LOADS GREATER THAN 146 DOORS: 32" MIN. MEASURED BETWEEN THE FACE OF THE DOOR AND THE STOP WITH THE DOOR OPEN 90 DEGREES OR INDIVIDUAL DOOR OCCUPANT LOAD MULTIPLIED BY 0.2" WHICHEVER IS GREATER

MAXIMUM ALLOWABLE EXIT ACCESS TRAVEL DISTANCE (REFER TO SECTION 1017.2)	OCCUPANCY	NON-SPRINKLERED	FULLY SPRINKLERED
	B	200 FT	300 FT

MAXIMUM ALLOWABLE COMMON PATH OF EGRESS TRAVEL DISTANCE (REFER TO TABLE 1006.2.1)	OCCUPANCY	NON-SPRINKLERED	FULLY SPRINKLERED
	B	75 FT	100 FT

[CALCULATED] OR [ACTUAL] MINIMUM NUMBER OF REQUIRED PLUMBING FIXTURES TABLE 2902.1

OCCUPANCY	WATER CLOSETS MALE	WATER CLOSETS FEMALE	LAVATORIES MALE	LAVATORIES FEMALE	BATHTUBS/ SHOWERS	DRINKING FOUNTAINS
B	1 PER 25 FOR THE FIRST 50 AND 1 PER 50 FOR THE REMAINDER EXCEEDING 50		1 PER 40 FOR THE FIRST80 AND 1 PER 80 FOR THE REMAINDER EXCEEDING 80		SEE SECTION 411 OF THE INTERNATIONAL PLUMBING CODE	1 PER 100

OTHER: 1 SERVICE SINK PER OCCUPANCY; NOT REQUIRED FOR BUSINESS OR MERCANTILE OCCUPANCIES WITH AN OCCUPANT LOAD OF 15 OR LESS

DESIGNED NUMBER OF REQUIRED PLUMBING FIXTURES

OCCUPANCY	WATER CLOSETS UNISEX	LAVATORIES UNISEX	BATHTUBS/ SHOWERS	DRINKING FOUNTAINS
B	4	4	2	1

OTHER: 0 SERVICE SINKS IN B

NOTE: SHARED RESTROOMS WITH X OCCUPANCY BELOW

OCCUPANCY	WATER CLOSETS UNISEX	LAVATORIES UNISEX	BATHTUBS/ SHOWERS	DRINKING FOUNTAINS
N/A				

OTHER: 0 SERVICE SINK(S)

CODE NOTES:

1. BUILDING CODE IBC 2009 XX EDITION OCCUPANCIES:
   OFFICE AREAS: BUSINESS GROUP B
   WATER TREATMENT: HAZARDOUS MATERIALS GROUP H-4
   SHOP AREA: FACTORY GROUP F-1
   WAREHOUSE AREA: STORAGE GROUP S-1
   OCCUPANCY SEPARATION: REQUIRED
2. NFPA 850 SECTION 5.1.1.3 (RECOMMENDED) SEPARATE CONTROL ROOM AND COMPUTER ROOMS FROM ADJACENT AREAS WITH TWO-HOUR BARRIERS.

-PRELIMINARY-
NOT FOR CONSTRUCTION

REV	DESIGNED BY	CHECKED BY	DATE
	D. HILL	A. MARTIN	

ADVANCED NGCC DE-FE-0032131
GE SOUTHERN LINDE

Kiewit

ADMINISTRATION-CONTROL BUILDING LIFE SAFETY FLOOR PLAN

OPEN

ENGINEER/ DESIGN ORIGINATOR	A. MARTIN	DRAWING NUMBER
LEAD ENG.	M. HOLDSWORTH	BA-100
ENG MGR	B. LOFGREEN	
PROJ MGR	B. LOFGREEN	

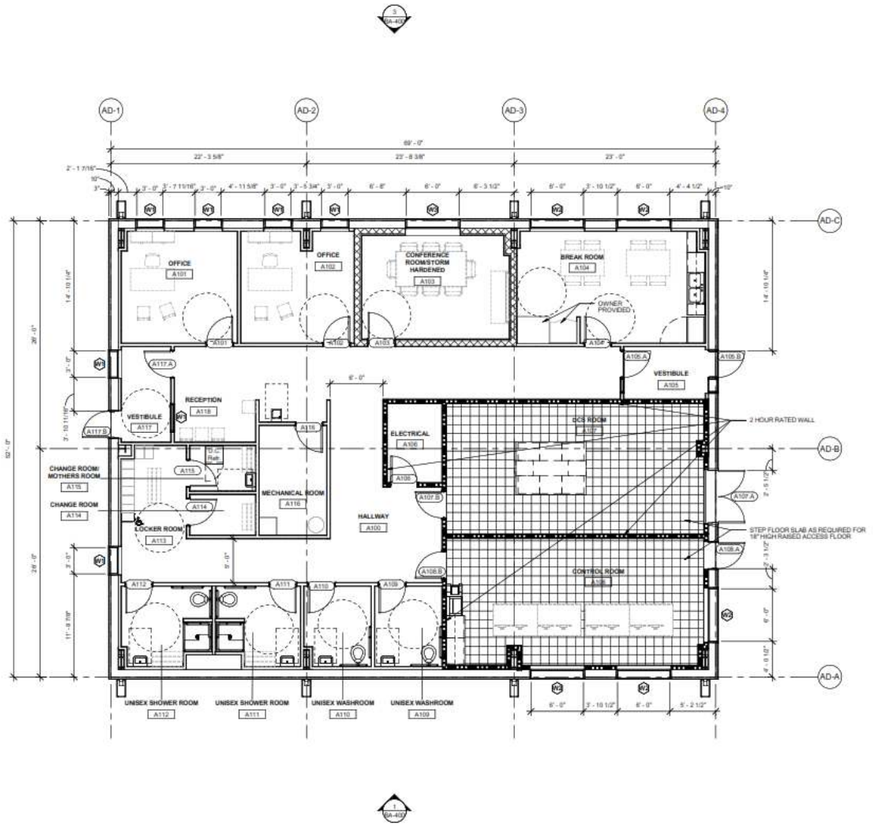

1 FLOOR PLAN
3/16" = 1'-0"

GENERAL NOTES:

1. COLUMN SIZES AND LOCATIONS ARE CONCEPTUAL ONLY INDICATING NOT TO EXCEED SIZES, AND ARE SUBJECT TO REVISIONS AS A RESULT OF: DETAILED DESIGN, DETAILED CODE REVIEW, AND METAL BUILDING SYSTEM SUPPLIERS FINAL DESIGN.
2. FINAL DESIGN MUST MEET APPLICABLE LOCAL, STATE, AND NATIONAL CODES AND STANDARDS.
3. OVERALL BUILDING DIMENSIONS AS SHOWN TO REMAIN UNCHANGED.
4. THE METAL BUILDING SYSTEMS (MBS) MANUFACTURER SHALL BE ACCREDITED UNDER THE INTERNATIONAL ACCREDITATION SERVICE, "ACCREDITATION CRITERIA FOR INSPECTION PROGRAMS FOR MANUFACTURERS OF METAL BUILDING SYSTEMS (AC472)".
5. ALL STRUCTURAL FRAMING AND CLADDING SHALL BE THE DESIGN OF A LICENSED PROFESSIONAL ENGINEER EXPERIENCED IN DESIGN OF THIS WORK IN THE JURISDICTION OF WHERE THE PROJECT IS LOCATED.
6. CONTRACTOR SHALL VERIFY FINAL SIZES AND LOCATIONS OF ALL MECHANICAL EQUIPMENT AND ASSOCIATED EQUIPMENT SUPPORT, UTILITIES, AND INSTALL REQUIREMENTS.

-PRELIMINARY-
NOT FOR CONSTRUCTION

REV	DESIGNED BY	CHECKED BY	DATE
	D. HILL	A. MARTIN	

ADVANCED NGCC DE-FE-0032131
GE SOUTHERN LINDE

Kiewit

ADMINISTRATION-CONTROL BUILDING FLOOR PLAN

OPEN

ENGINEER/ DESIGN		DRAWING NUMBER
ORIGINATOR	A. MARTIN	BA-200
LEAD ENG.	M. HOLDSWORTH	
ENG MGR.	B. LOFGREEN	
PROJ MGR.	B. LOFGREEN	

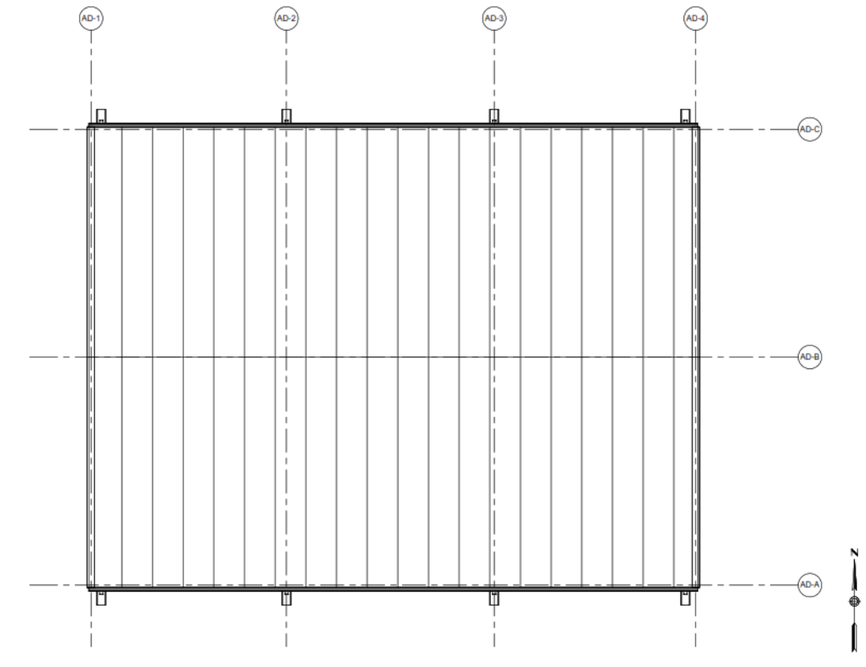

1 ROOF PLAN
3/16" = 1'-0"

GENERAL NOTES:

1. COLUMN SIZES AND LOCATIONS ARE CONCEPTUAL ONLY INDICATING NOT TO EXCEED SIZES, AND ARE SUBJECT TO REVISIONS AS A RESULT OF: DETAILED DESIGN, DETAILED CODE REVIEW, AND METAL BUILDING SYSTEM SUPPLIERS FINAL DESIGN.
2. FINAL DESIGN MUST MEET APPLICABLE LOCAL, STATE, AND NATIONAL CODES AND STANDARDS.
3. OVERALL BUILDING DIMENSIONS AS SHOWN TO REMAIN UNCHANGED.
4. THE METAL BUILDING SYSTEMS (MBS) MANUFACTURER SHALL BE ACCREDITED UNDER THE INTERNATIONAL ACCREDITATION SERVICE, "ACCREDITATION CRITERIA FOR INSPECTION PROGRAMS FOR MANUFACTURERS OF METAL BUILDING SYSTEMS (AC472)".
5. ALL STRUCTURAL FRAMING AND CLADDING SHALL BE THE DESIGN OF A LICENSED PROFESSIONAL ENGINEER EXPERIENCED IN DESIGN OF THIS WORK IN THE JURISDICTION OF WHERE THE PROJECT IS LOCATED.
6. SEE MECHANICAL DRAWINGS FOR HVAC EQUIPMENT, SHAFT, AND PENETRATION LOCATIONS.
7. MECHANICAL AND PLUMBING EQUIPMENT PLATFORM DIMENSIONS SHALL BE A MINIMUM OF 4 INCHES ABOVE ADJACENT ROOF ELEVATION.
8. CONTRACTOR SHALL VERIFY FINAL SIZES AND LOCATIONS OF ALL MECHANICAL EQUIPMENT AND ASSOCIATED EQUIPMENT SUPPORT, UTILITIES, AND INSTALL REQUIREMENTS.

-PRELIMINARY-
NOT FOR CONSTRUCTION

REV	DESIGNED BY	CHECKED BY	DATE
	D. HILL	A. MARTIN	

ADVANCED NGCC DE-FE-0032131
GE SOUTHERN LINDE

Kiewit

ADMINISTRATION-CONTROL BUILDING ROOF PLAN

OPEN

ENGINEER/ DESIGN ORIGINATOR	A. MARTIN
LEAD ENG	M. HOLDSWORTH
ENG MGR	B. LOFGREEN
PROJ MGR	B. LOFGREEN

DRAWING NUMBER
BA-202

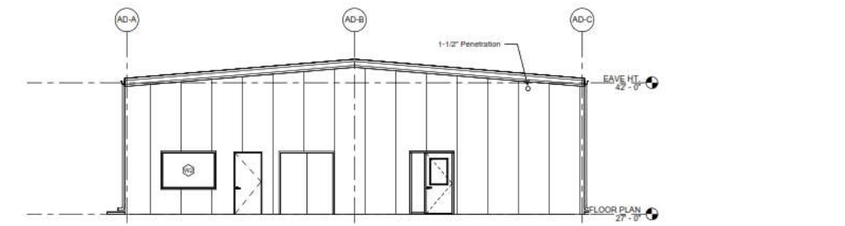

4 EAST EXTERIOR ELEVATION
3/16" = 1'-0"

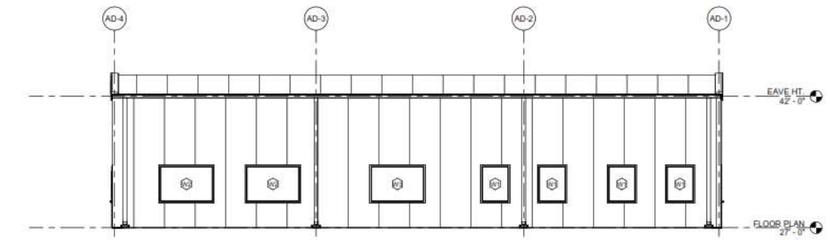

3 NORTH EXTERIOR ELEVATION
3/16" = 1'-0"

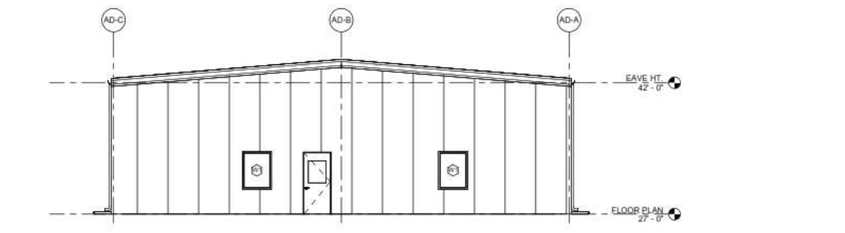

2 WEST EXTERIOR ELEVATION
3/16" = 1'-0"

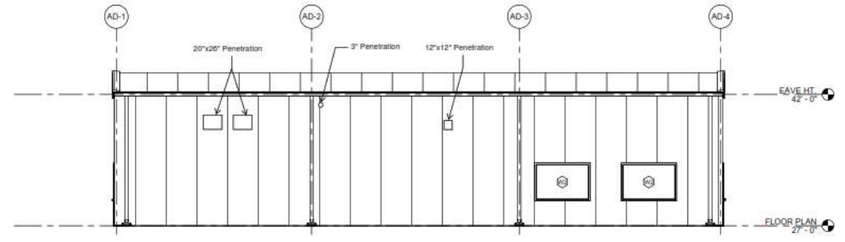

1 SOUTH EXTERIOR ELEVATION
3/16" = 1'-0"

GENERAL NOTES:

1. ALL VERTICAL DIMENSIONS SHOWN ARE FROM TOP OF FLOOR SLAB, UNLESS OTHERWISE NOTED.
2. DO NOT SCALE DRAWINGS. ENLARGED FLOOR PLANS AND DETAILS/SECTIONS OVERRIDE SMALLER SCALE FLOOR PLANS AND DETAILS/SECTIONS.

-PRELIMINARY-
NOT FOR CONSTRUCTION

REV	D. HILL DESIGNED BY	A. MARTIN CHECKED BY	DATE

ADVANCED NGCC DE-FE-0032131
GE SOUTHERN LINDE

Kiewit

ADMINISTRATION-CONTROL BUILDING EXTERIOR ELEVATIONS

OPEN

ENGINEER/ DESIGN ORIGINATOR	A. MARTIN
LEAD ENG.	M. HOLDSWORTH
ENG MGR.	B. LOFGREEN
PROJ. MGR.	B. LOFGREEN

DRAWING NUMBER
BA-400

INTERIOR FINISH SCHEDULE

ROOM NUMBER	ROOM NAME	FLOOR FINISH	BASE FINISH	EAST WALL		SOUTH WALL		WEST WALL		NORTH WALL		CEILING			CABINET	COUNTERTOP	COMMENTS
				MATERIAL	FINISH	MATERIAL	FINISH	MATERIAL	FINISH	MATERIAL	FINISH	MATERIAL	FINISH	HEIGHT			
A100	HALLWAY	SC	RB	GB	PT	GB	PT	GB	PT	GB	PT	ACT	PF	10' - 0"			
A101	OFFICE	SC	RB	GB	PT	GB	PT	GB	PT	GB	PT	ACT	PF	10' - 0"			
A102	OFFICE	SC	RB	GB	PT	GB	PT	GB	PT	GB	PT	ACT	PF	10' - 0"			
A103	CONFERENCE ROOM/STORM HARDENED	SC	RB	GB	PT	GB	PT	GB	PT	GB	PT	ACT	PF	10' - 0"			
A104	BREAK ROOM	SC	RB	GB	PT	GB	PT	GB	PT	GB	PT	ACT	PF	10' - 0"	PLAM	SSF	
A105	VESTIBULE	SC	RB	GB	PT	GB	PT	GB	PT	GB	PT	ACT	PF	10' - 0"			
A106	ELECTRICAL	SC	RB	GB	PT	GB	PT	GB	PT	GB	PT	EXP	PF	10' - 0"			
A107	DCS ROOM	SDT/ACF	RB	GB	PT	GB	PT	GB	PT	GB	PT	ACT	PF	10' - 0"			
A108	CONTROL ROOM	SDT/ACF	RB	GB	PT	GB	PT	GB	PT	GB	PT	ACT	PF	10' - 0"			
A109	UNISEX WASHROOM	CT	CT	CT/GB	CT/PT	CT/GB	CT/PT	GB	PT	GB	PT	ACT	PF	10' - 0"			
A110	UNISEX WASHROOM	CT	CT	CT/GB	CT/PT	CT/GB	CT/PT	GB	PT	GB	PT	ACT	PF	10' - 0"			
A111	UNISEX SHOWER ROOM	CT	CT	GB	PT	CT/GB	CT/PT	CT/GB	CT/PT	CT/GB	CT/PT	ACT	PF	10' - 0"			
A112	UNISEX SHOWER ROOM	CT	CT	CT/GB	CT/PT	CT/GB	CT/PT	GB	PT	CT/GB	CT/PT	ACT	PF	10' - 0"			
A113	LOCKER ROOM	SC	RB	GB	PT	GB	PT	GB	PT	GB	PT	ACT	PF	10' - 0"			
A114	CHANGE ROOM	SC	RB	GB	PT	GB	PT	GB	PT	GB	PT	ACT	PF	10' - 0"			
A115	CHANGE ROOM/ MOTHERS ROOM	SC	RB	GB	PT	GB	PT	GB	PT	GB	PT	ACT	PF	10' - 0"			
A116	MECHANICAL ROOM	SC	RB	GB	PT	GB	PT	GB	PT	GB	PT	EXP	PF	10' - 0"			
A117	VESTIBULE	SC	RB	GB	PT	GB	PT	GB	PT	GB	PT	ACT	PF	10' - 0"			
A119	RECEPTION	SC	RB	GB	PT	GB	PT	GB	PT	GB	PT	ACT	PF	10' - 0"			

DOOR SCHEDULE

DOOR NUMBER	DOOR								FRAME		REMARKS
	DOOR SIZE			TYPE	MATERIAL	FINISH	FIRE RATING	GLAZING TYPE	MATERIAL	FINISH	
	WIDTH	HEIGHT	THICK								
Exterior											
A100.B	3' - 0"	7' - 0"	1 3/4"	F-H	HM	PT		TQ	HM	PT	F3 - FRAME TYPE
A107.A	6' - 0"	7' - 0"	1 3/4"	DF	HM	PT			HM	PT	
A108.A	3' - 0"	7' - 0"	1 3/4"	F-H	HM	PT		TQ	HM	PT	
A117.B	3' - 0"	7' - 0"	1 3/4"	F-H	HM	PT		TQ	HM	PT	F3 - FRAME TYPE
Interior											
A101	3' - 0"	7' - 0"	1 3/4"	F-N	HM	PT		TQ	HM	PT	
A102	3' - 0"	7' - 0"	1 3/4"	F-N	HM	PT		TQ	HM	PT	
A103	3' - 0"	7' - 0"	1 3/4"	F-N	HM	PT		TQ	HM	PT	
A104	3' - 0"	7' - 0"	1 3/4"	F-N	HM	PT		TQ	HM	PT	
A105.A	3' - 0"	7' - 0"	1 3/4"	F-H	HM	PT		TQ	HM	PT	F3 - FRAME TYPE
A106	3' - 0"	7' - 0"	1 3/4"	F	HM	PT	90 MINUTES	-	HM	PT	
A107.B	3' - 0"	7' - 0"	1 3/4"	F	HM	PT	90 MINUTES	-	HM	PT	
A108.B	3' - 0"	7' - 0"	1 3/4"	F	HM	PT	90 MINUTES	-	HM	PT	
A109	3' - 0"	7' - 0"	1 3/4"	F	HM	PT		-	HM	PT	
A110	3' - 0"	7' - 0"	1 3/4"	F	HM	PT		-	HM	PT	
A111	3' - 0"	7' - 0"	1 3/4"	F	HM	PT		-	HM	PT	
A112	3' - 0"	7' - 0"	1 3/4"	F	HM	PT		-	HM	PT	
A114	3' - 0"	7' - 0"	1 3/4"	F	HM	PT		-	HM	PT	
A115	3' - 0"	7' - 0"	1 3/4"	F	HM	PT		-	HM	PT	
A116	3' - 0"	7' - 0"	1 3/4"	F	HM	PT		-	HM	PT	
A117.A	3' - 0"	7' - 0"	1 3/4"	F-H	HM	PT		TQ	HM	PT	F3 - FRAME TYPE

WINDOW SCHEDULE

TYPE	Count	DESCRIPTION	WINDOW				GLAZING TYPE	FRAME		REMARKS
			WINDOW SIZE		SILL HEIGHT	FIRE RATING		FRAME MATERIAL	FRAME FINISH	
			WIDTH	HEIGHT						
W1	7	ALUMINUM FRAME	3' - 0"	4' - 0"	3' - 0"		INS	HM	PT	
W2	5	ALUMINUM FRAME	6' - 0"	4' - 0"	3' - 0"		INS	HM	PT	
W3	1	ALUMINUM FRAME - STORM SHELTER COMPLIANT	6' - 0"	4' - 0"	3' - 0"		INS	HM	PT	

INTERIOR FINISH LEGEND

FLOOR:

- SC: SEALED CONCRETE
- ST: STEEL FLOOR
- CT: CERAMIC FLOOR TILE
- SDT: STATIC DISSIPATIVE TILE
- RF: RESINOUS FLOORING
- VCT: VINYL COMPOSITE TILE
- ACF: ACCESS FLOORING
- CPT: CARPET TILE

BASE:

- RB: RUBBER BASE
- CT: CERAMIC TILE

WALL MATERIALS:

- GB: GYPSUM BOARD
- MLP: METAL LINER PANEL
- EXP: EXPOSED STRUCTURE
- CMU: CONCRETE MASONRY UNIT
- CONC: CONCRETE

CEILING MATERIALS:

- GB: GYPSUM BOARD
- ACT: ACOUSTICAL CEILING TILE
- EXP: EXPOSED TO PAINTED STRUCTURE

FINISHES:

- HPC: HIGH PERFORMANCE COATING
- PT: PAINTED FINISH
- PF: PRE FINISHED
- CT: CERAMIC TILE

CASEWORK:

- PLAM: PLASTIC LAMINATE
- MTL: METAL
- SSF: SOLID SURFACE
- CSF: CHEMICAL RESISTANT SOLID SURFACE

GENERAL NOTES:

1. PROVIDE HOLD-DOWN CLIPS FOR ACOUSTICAL CEILING TILES WITHIN 10' OF ALL EXTERIOR DOORS.
2. LOCATE FLOOR MATERIAL TRANSITIONS AT CENTER LINE OF DOORS IN THE CLOSED POSITION

DOOR / WINDOW LEGEND

- AL: ALUMINUM STOREFRONT SYSTEM
- HM: HOLLOW METAL
- ST: STEEL
- PF: PREFINISHED BY MANUFACTURER
- PT: PAINTED FINISH
- WD: WOOD
- FRP: FIBER-REINFORCED POLYMER
- SS: STAINLESS STEEL

GLAZING LEGEND

- BRG: BLAST RESISTANT GLASS
- FRG: FIRE RATED GLASS
- TG: TEMPERED GLASS
- CLR: CLEAR
- INS: INSULATED

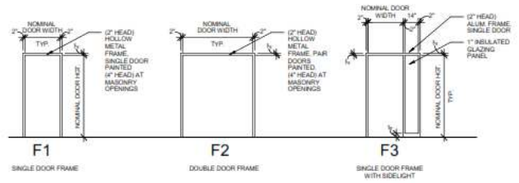

FRAME TYPES

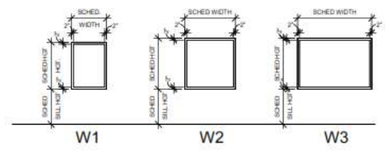

WINDOW TYPES

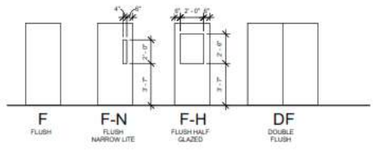

DOOR TYPES

GENERAL NOTES:

1. DOOR OPENINGS ARE TO BE LOCATED WITHIN 4" MINIMUM OF ADJACENT PERPENDICULAR PARTITIONS UNLESS NOTED OTHERWISE.
2. CONTRACTOR IS RESPONSIBLE TO COORDINATE & VERIFY ALL DOOR FRAME THROAT THICKNESS FOR EACH LOCATION.
3. ALL DOOR STOPS TO HAVE BLOCKING IN WALL BEYOND.
4. ALL VERTICAL DIMENSIONS SHOWN ARE FROM TOP OF FLOOR SLAB, UNLESS OTHERWISE NOTED.
5. DO NOT SCALE DRAWINGS. ENLARGED FLOOR PLANS AND DETAILS/SECTIONS OVERRIDE SMALLER SCALE FLOOR PLANS AND DETAILS/SECTIONS.

-PRELIMINARY-
NOT FOR CONSTRUCTION

REV	D. HILL DESIGNED BY	A. MARTIN CHECKED BY	DATE

ADVANCED NGCC DE-FE-0032131
GE SOUTHERN LINDE

Kiewit

ADMINISTRATION-CONTROL BUILDING SCHEDULES

OPEN

ENGINEER DESIGN ORIGINATOR	A. MARTIN	DRAWING NUMBER
LEAD ENG	M. HOLDSWORTH	BA-800
ENG MGR	B. LOFGREEN	
PROJ MGR	B. LOFGREEN	

BUILDING ELECTRICAL SPECIFICATIONS

ELECTRICAL REQUIREMENTS

SECTION 1 - LOW VOLTAGE ELECTRICAL POWER CONDUCTORS AND CABLING

1.1 Conductors: Copper, stranded, complying with ASTM B 3 and B 8.

1.2 Insulation: THHN/THWN-2 or XHHW-2, 600V, 90°C wet and dry rated. NEMA WC 70/ICEA S-95-658 compliant.

1.3 MC and MC-PCS Cable: Conductors and insulation as indicated above, with bare or insulated equipment grounding conductor and interlocked steel armor, UL 1569 compliant. MC-PCS provided with twisted jacketed pair for 0-10V dimming control.

1.4 Minimum Conductor Size: No. 12 AWG.

1.5 Connectors: No. 8 AWG and larger use double indent, long barrel, two-hole copper compression lugs: No. 10 AWG and smaller use pre-insulated ring type compression lugs. No. 8 AWG and smaller use twist type insulated spring connectors for splicing.

1.6 Execution:
- 1.6.1 Route all cabling in raceway, except for MC type cabling.
- 1.6.2 Size conductors per NEC requirements, accounting for local temperatures, voltage drop, and other deratings as necessary.
- 1.6.3 MC and MC-PCS cable may be provided when concealed in finished walls or ceiling spaces, for final connections to fixtures and devices. MC and MC-PCS cable will not be allowed for circuit homeruns.
- 1.6.4 Perform each visual and mechanical inspection and electrical test stated in NETA Acceptance Testing Specification. Certify compliance with test parameters.

SECTION 2 - GROUNDING

2.1 Cables and Conductors: Comply with section "Low Voltage Electrical Power Conductors and Cabling" of this document.

2.2 Execution:
- 2.2.1 Provide an insulated equipment grounding conductor with all branch circuits and feeders, sized per NEC requirements at a minimum.
- 2.2.2 Ground metallic conduit at both end points by bonding to a grounding conductor, a grounded metal enclosure, or to a grounded metal cable tray.
- 2.2.3 Bond water supply piping and gas supply piping to the grounding system.
- 2.2.4 Solidly ground all 208Y/120V step-down transformers.
- 2.2.5 Connections to Structural Steel: Bolted or clamped connectors.
- 2.2.6 Above Grade Connections: Bolted or clamped connectors.
- 2.2.7 Below Grade Connections: Irreversible compression connectors.

SECTION 3 - HANGERS AND SUPPORTS

3.1 Slotted Support Systems: Pre-formed steel channels, hot-dipped galvanized coating, minimum 1-5/8" width, MFMA-4 compliant.

3.2 Conduit and Cable Support Devices: Galvanized steel or malleable iron.

3.3 Fasteners, Hardware and Rods: Galvanized steel.

SECTION 4 - RACEWAYS AND BOXES

4.1 GRC: Comply with ANSI C80.1 and UL 6.

4.2 EMT: Comply with ANSI C80.3 and UL 797, with steel compression fittings.

4.3 FMC: Comply with UL 1; zinc-coated steel.

4.4 LFMC: Flexible steel conduit with PVC jacket and complying with UL 360.

4.5 RNC: Type EPC-40-PVC or EPC-80-PVC, complying with NEMA TC 2 and UL 651 unless otherwise indicated.

4.6 Small Sheet Metal Pull and Junction Boxes: NEMA OS 1.

4.7 Cast-Metal Access, Pull, and Junction Boxes: Comply with NEMA FB 1 and UL 1773, galvanized, cast iron with gasketed cover.

4.8 Execution:
- 4.8.1 Size all raceways per NEC requirements. Minimum size shall be 3/4".
- 4.8.2 Do not route building interior branch circuits and feeders below grade unless no above grade option exists.
- 4.8.3 In finished areas, recess boxes and conceal raceways. In all exterior areas, surface mount boxes and raceways using slotted support systems.
- 4.8.4 Provide RGS in all exterior areas.
- 4.8.5 Provide EMT above the floor slab in finished areas as well as electrical and telecom rooms.
- 4.8.6 Provide flexible conduit to connect vibrating equipment to the conduit system, at no more than 3ft except where allowed by the NEC to be 6ft.
- 4.8.7 Provide PVC (Schedule 40 or 80) or RGS for below grade raceways. Provide vertical elbows and risers through slabs as RGS.
- 4.8.8 Provide galvanized stamped steel boxes in finished areas, as well as electrical and telecom rooms. Provide cast metal boxes in all exterior areas.

SECTION 5 - IDENTIFICATION

5.1 Performance Requirements: Comply with ASME A13.1, NFPA 70, NFPA 70E, 29 CFR 1910.144, 29 CFR 1910.145, and ANSI Z535.4.

5.2 Execution:
- 5.2.1 Provide all distribution equipment with a plastic engraved nameplate, white background with black lettering.
- 5.2.2 Branch circuit designations will be indicated on associated wiring device cover plates and on junction/pull boxes.
- 5.2.3 Provide color-coding for conductors as factory-applied, or field applied for sizes larger than No. 8 AWG if authorities having jurisdiction allows.

SECTION 6 - TRANSFORMERS

6.1 Distribution Transformers:
- 6.1.1 Coil Material: Aluminum or copper.
- 6.1.2 Enclosure: Ventilated, NEMA 2 unless installed location requires otherwise.
- 6.1.3 Insulation Class: 220 deg C, UL-component-recognized insulation system with a maximum of 150 deg C rise above 40 deg C ambient temperature.
- 6.1.4 Taps: At least two 2.5 percent taps above and two 2.5 percent taps below normal full capacity.

6.2 Transformers shall be seismic certified where required by the project seismic conditions and ASCE 7.

6.3 Execution:
- 6.3.1 Install transformers with vibration-dampening supports.
- 6.3.2 Provide visual and mechanical inspections and electrical tests in accordance with NETA ATS. Adjust taps as necessary.

SECTION 7 - PANELBOARDS

7.1 Power Panelboard, Lighting and Appliance Branch Circuit Panelboards and Load Centers:
- 7.1.1 Enclosures: Surface-mounted, dead-front cabinet with hinged and lockable door, factory painted panels, trim and back box.
- 7.1.2 Mains: Provide main circuit breaker.
- 7.1.3 Buses: Copper. Provide phase buses arranged as A/B/C top-to-bottom, left-to-right and front-to-back.
- 7.1.4 Conductor Connectors: Copper, mechanical type lugs, allows use of 75 deg C rated conductors without derating.
- 7.1.5 Short-Circuit Current Rating: Fully-rated, 22kA RMS minimum for 208Y/120V boards and 65kA RMS minimum for 480V boards. Perform short circuit calculations to verify adequate ratings. Short circuit current ratings shall be at least 10% higher than the calculated short circuit.
- 7.1.6 Provide a minimum of 20% spare breakers (% of panelboard total pole quantity).

7.2 Circuit Breakers:
- 7.2.1 Attachment: Bolt-on, or plug-in where individual positive-locking device requires mechanical release for removal.
- 7.2.2 Thermal-magnetic or electronic trip type.
- 7.2.3 Lugs: Mechanical type.

7.3 Execution:
- 7.3.1 Provide each panelboard with a typed circuit directory.
- 7.3.2 Provide visual and mechanical inspections and electrical tests in accordance with NETA ATS.

SECTION 8 - SURGE PROTECTION DEVICES

8.1 SPDs: Field-mounted, Type 2, UL 1449 compliant, 100kA peak surge current rating per phase, minimum 100kA SCCR rating.

8.2 Protection Modes: Line-to-line and line-to-ground modes appropriate for 480V 3-phase 3-wire panelboards fed from a 480Y/277V 3-phase high-resistance grounded system.

8.3 Execution:
- 8.3.1 Connect to associated panelboard via an appropriately sized branch circuit breaker.

SECTION 9 - WIRING DEVICES

9.1 Duplex Receptacles: 20A, 125V, NEMA 5-20R, industrial grade.

9.2 Isolated Ground Receptacles: 20A, 125V, NEMA 5-20R, grounding components electrically isolated from mounting strap, orange device color, industrial grade.

9.3 Tamper and Weather-Resistant GFCI Receptacles: 20A, 125V, NEMA 5-20R, non-feed-through type, industrial grade, with "test" and "reset" buttons and indicator light, compliant with UL 934 Class A.

9.4 Wall Plates: Brushed stainless steel.

9.5 Wet Location Covers: Cast metal construction, in-use type, lockable.

9.6 Floor Boxes: Flush type, dual-service with internal barriers, and hinged die-cast metal lid with retractable or hinged cord flaps. Provide with at least one duplex 20A 125V receptacle, one gang for data and/or A/V devices, and one spare gang with blank cover plate.

9.7 TV Boxes: Recessed dual-service steel box assembly, with one duplex 20A 125V receptacle and one gang for AV and/or data devices, and overall white trim, allowing for cord connections within recessed housing.

9.8 Execution:
- 9.8.1 Provide receptacles served by UPS-fed panelboards as isolated ground type.
- 9.8.2 For each floorbox, provide two 1-inch empty conduits with pullstrings, in addition to any power conduits, for data and/or AV cabling by others.

SECTION 10 - DISCONNECTS AND STARTERS

10.1 Fusible and Non-Fusible Switches :
- 10.1.1 Heavy-duty, single throw, three-pole, 600V, lockable handle.
- 10.1.2 Provide fusible switches with Class R fuse kit.
- 10.1.3 Disconnects shall be seismic certified where required by the project seismic conditions and ASCE 7.

10.2 Combination Starters:
- 10.2.1 Non-reversing, full-voltage magnetic controller with disconnecting means.
- 10.2.2 Control power transformer with spare capacity.
- 10.2.3 Solid-state overload relay, Class 10/20 selectable.
- 10.2.4 MCP disconnecting means with lockable handle.
- 10.2.5 Reset button.
- 10.2.6 Pilot Lights: One red for "on", one green for "off".
- 10.2.7 Combination starters shall be seismic certified where required by the project seismic conditions and ASCE 7.

10.3 Execution:
- 10.3.1 Provide visual and mechanical inspections and electrical tests in accordance with NETA ATS.

SECTION 11 - LIGHTNING PROTECTION

11.1 Performance: System compliant with NFPA 780 and UL 96A, Class I or II as appropriate for height of building.

11.2 Components:
- 11.2.1 Air Terminals: Aluminum, rounded tip, threaded base with adhesive mounting.
- 11.2.2 Conductors: Stranded aluminum.
- 11.2.3 Rooftop Conductor Mounts: Bolted conductor connection, adhesive mounting.
- 11.2.4 Down Conductor Mounts: Aluminum or stainless steel clips, sealing washer and stainless steel screw.
- 11.2.5 Splicing Connectors: Bolted conductor connection, bi-metallic construction.

11.3 Execution:
- 11.3.1 Provide above ground components as surface mounted. No roof penetrations will be allowed.
- 11.3.2 Provide UL Master Label for each lightning protection system.

SECTION 12 - LIGHTING CONTROLS

12.1 Outdoor Photoelectric Switches: SPST, adjustable light level sensing.

12.2 Lighting Contactors: Electrically operated and electrically held, with enclosure and HOA switch.

12.3 Interior Occupancy-Sensor Based Controls: Digital, connected via UTP cabling.

12.4 Execution:
- 12.4.1 Provide commissioning for lighting controls in compliance with applicable energy code.

SECTION 13 - LIGHTING

13.1 General Light Fixtures: LED, with integral driver.

13.2 Emergency Light Fixtures: Emergency lighting units, with integral batteries and dual lamp heads.

13.3 Exit Signs: LED, with integral batteries.

SHEET NOTES:

1. REFER TO SHEETS 8A SERIES FOR ARCHITECTURAL DRAWINGS, NOTES, DETAILS, SCHEDULES AND REQUIREMENTS.
2. REFER TO SHEETS 8E SERIES FOR BUILDING ELECTRICAL DRAWINGS, NOTES, DETAILS, SCHEDULES AND REQUIREMENTS.
3. REFER TO SHEETS 8H SERIES FOR HVAC MECHANICAL DRAWINGS, NOTES/DETAILS, SCHEDULES AND REQUIREMENTS.
4. REFER TO SHEETS 8P SERIES FOR PLUMBING DRAWINGS, NOTES, DETAILS, SCHEDULES AND REQUIREMENTS.

-PRELIMINARY-
NOT FOR CONSTRUCTION

REV		Designer DESIGNED BY	Checker CHECKED BY	DATE

ADVANCED NGCC DE-FE-0032131
GE SOUTHERN LINDE

Kiewit

ELECTRICAL DESIGN CRITERIA & SPECIFICATIONS

ENGINEERS' DESIGN ORIGINATOR
LEAD ENG
ENG MGR
PROJ MGR

DRAWING NUMBER
BE-000

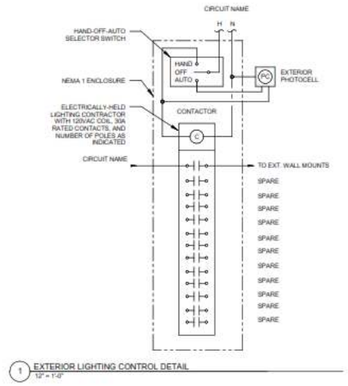

1 EXTERIOR LIGHTING CONTROL DETAIL
1/2" = 1'-0"

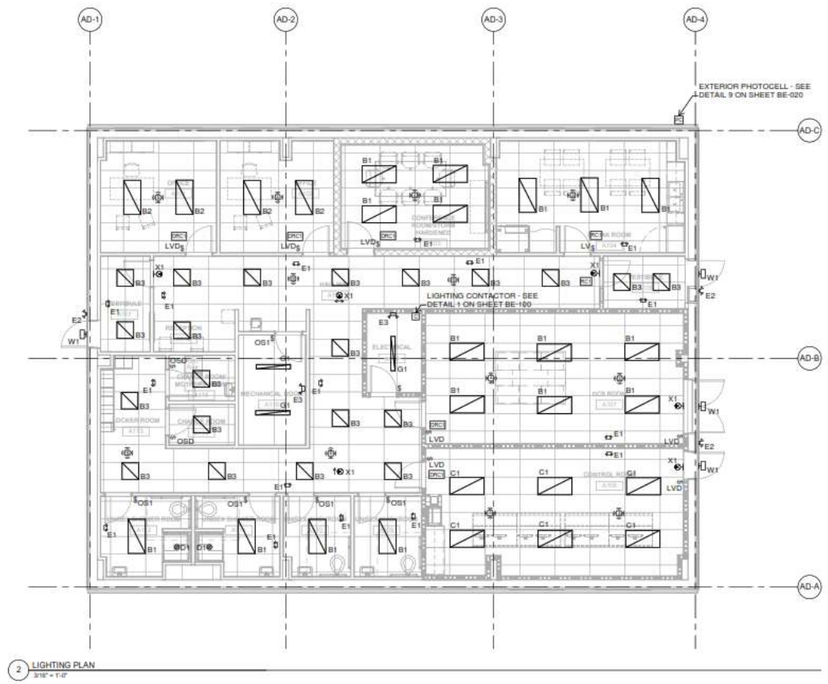

2 LIGHTING PLAN
3/16" = 1'-0"

ELECTRICAL GENERAL NOTES

1. REFER TO SHEET 20041223-0000-BE-000 FOR GENERAL NOTES
2. REFER TO SHEET 20041223-0001-BE-030 FOR LIGHTING CONTROL DEVICE SCHEDULE AND LIGHT FIXTURE SCHEDULE.

-PRELIMINARY-
NOT FOR CONSTRUCTION

REV	T. LY DESIGNED BY	B. MCCLEISH CHECKED BY	DATE

ADVANCED NGCC DE-FE-0032131
GE SOUTHERN LINDE

Kiewit

ADMINISTRATION-CONTROL BUILDING LIGHTING PLAN

OPEN

ENGINEERS DESIGN ORIGINATOR	B. MCCLEISH
LEAD ENG	M. HOLDSWORTH
ENG MGR	B. LOFGREEN
PROJ MGR	B. LOFGREEN

DRAWING NUMBER: BE-100

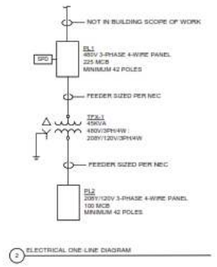

2 ELECTRICAL ONE-LINE DIAGRAM

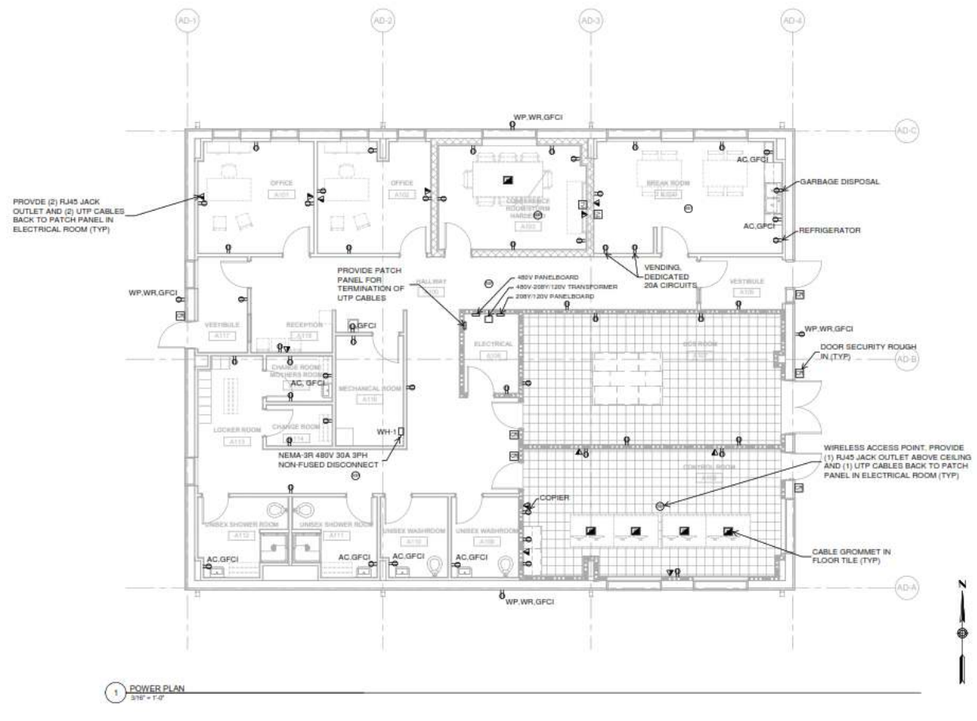

1 POWER PLAN
3/16" = 1'-0"

ELECTRICAL GENERAL NOTES

1. 20A 120V RECEPTACLE CIRCUITS SHALL HAVE NO MORE THAN (8) RECEPTACLES ON THE CIRCUIT.
2. PROVIDE ALL POWER CONNECTIONS TO HVAC AND PLUMBING EQUIPMENT UNO. PROVIDE REQUIRED DISCONNECTS AND STARTERS WHERE NOT PROVIDED BY HVAC AND PLUMBING CONTRACTORS. REFER TO MECHANICAL DRAWINGS FOR MORE INFORMATION.

-PRELIMINARY-
NOT FOR CONSTRUCTION

REV	DESIGNED BY	CHECKED BY	DATE
	T. LY	B. MCCLEISH	

ADVANCED NGCC DE-FE-0032131
GE SOUTHERN LINDE

Kiewit

ADMINISTRATION-CONTROL BUILDING POWER PLAN

OPEN

ENGINEER/ DESIGN ORGANIZATION		DRAWING NUMBER
LEAD ENG	M. HOLDSWORTH	BE-200
ENG MGR	B. LOFGREEN	
PROJ MGR	B. LOFGREEN	

LIGHT FIXTURE SCHEDULE

TYPE IN PROJECT	MANUFACTURER/SERIES	LAMPS NO.	LAMPS LAMP	VOLTAGE	INPUT WATTS	INPUT VA	DESCRIPTION	FIXTURE NOTES
B1	LITHONIA 2RTL4 SERIES **EQUIVALENT** H.E.WILLIAMS HE7L SERIES METALUX 24AC SERIES COLUMBIA LEFC24 SERIES		LED 3000 LUMENS 4000K, 82 CRI	120	29	32	2'W x 4'L x 3-1/8"D RECESSED VOLUMETRIC LED TROFFER. GRID MOUNTING. WHITE FINISH. PROVIDE WITH GRID MOUNTING, STATIC AIR FUNCTION, METAL DIFFUSER WITH ROUND HOLES, AND PROVIDE WITH 100-1% 0-10V DIMMING DRIVER.	
B2	LITHONIA 2RTL4 SERIES **EQUIVALENT** H.E.WILLIAMS HE7L SERIES METALUX 24AC SERIES COLUMBIA LEFC24 SERIES		LED 4000 LUMENS 4000K, 82 CRI	120	39	43	2'W x 4'L x 3-1/8"D RECESSED VOLUMETRIC LED TROFFER. GRID MOUNTING. WHITE FINISH. PROVIDE WITH GRID MOUNTING, STATIC AIR FUNCTION, METAL DIFFUSER WITH ROUND HOLES, AND PROVIDE WITH 100-1% 0-10V DIMMING DRIVER.	
B3	LITHONIA 2RTL4 SERIES **EQUIVALENT** H.E.WILLIAMS HE7L SERIES METALUX 24AC SERIES COLUMBIA LEFC22 SERIES		LED 2000 LUMENS 4000K, 82 CRI	120	20	22	2'W x 2'L x 3-1/8"D RECESSED VOLUMETRIC LED TROFFER. GRID MOUNTING. WHITE FINISH. PROVIDE WITH GRID MOUNTING, STATIC AIR FUNCTION, METAL DIFFUSER WITH ROUND HOLES, AND PROVIDE WITH 100-1% 0-10V DIMMING DRIVER.	
C1	LITHONIA 2AVL4 SE SERIES **EQUIVALENT** H.E.WILLIAMS DI LED SERIES CORELITE RX2X LED SERIES COLUMBIA LSTR24 SERIES		LED 3000 LUMENS 4000K, 82 CRI	120	36	40	2'W x 4'L x 5-1/2"D RECESSED DIRECT/INDIRECT LED TROFFER. GRID MOUNTING. WHITE FINISH. PROVIDE WITH GRID MOUNTING, STATIC AIR FUNCTION, METAL DIFFUSER WITH ROUND HOLES, AND PROVIDE WITH 100-1% 0-10V DIMMING DRIVER.	
D1	LITHONIA LDM SERIES **EQUIVALENT** H.E.WILLIAMS 6DR HALO HD6 LED SERIES HUBBELL LTR-6RD SERIES		LED 700 LUMENS 4000K, 80 CRI	120	6	7	6" DIAMETER x 5-11/16"D RECESSED LED DOWNLIGHT. PROVIDE WITH DOWNLIGHT APERTURE, WHITE TRIM, AND 100-1% 0-10V DRIVER. PROVIDE WITH WET LOCATION LISTING.	
E1	EMERGI-LITE RS SERIES	2	LED 12V 6W MR16 542 LUMENS (INCLUDED)	120	36	40	11-1/2"L x 7-1/4"W x 6-1/4"D RECESSED LED EMERGENCY LIGHTING UNIT. FULLY ADJUSTABLE HEADS. PROVIDE WITH WHITE FINISH, 12V 36W LEAD-CALCIUM BATTERY, TWO HEADS, EF13 MINI PLASTIC MR16 HEAD STYLE, AND ADVANCED DIAGNOSTICS (NON-AUDIBLE).	
E2	EMERGI-LITE HPR, SERIES	2	LED 12V 6W MR16 555 LUMENS (INCLUDED)	120	-	-	9-1/8"W x 5"H x 6-1/2"D REMOTE EXTERIOR LED EMERGENCY LIGHT FIXTURE. ENCLOSURE RATED NEMA 4X. TWIN FULLY ADJUSTABLE HEADS. GRAY FINISH. PROVIDE LOW VOLTAGE CONNECTION TO EXIT SIGN OR EMERGENCY LIGHTING UNIT WITHIN INTERIOR OF BUILDING AS INDICATED ON THE DRAWINGS. MOUNT TO EXTERIOR WALL WITH TOP OF FIXTURE EVEN WITH TOP OF ADJACENT DOOR FRAME UNO. USING NEMA 4X JUNCTION BOX.	1,3
E3	EMERGI-LITE 12HF SERIES	2	LED 12V 24V 6W 555 LUMENS (INCLUDED)	120	36	40	11-1/2"W x 12-5/8"H x 5-1/2"D LED EMERGENCY LIGHTING UNIT. ENCLOSURE RATED NEMA 4X. TWIN FULLY ADJUSTABLE HEADS. 0-90DEG C OPERATING TEMPERATURE. PROVIDE WITH 12V-36W LEAD-CALCIUM BATTERY, TWO HEADS, ADVANCED DIAGNOSTICS (AUDIBLE). MOUNT AT 10'-0" AFF UNO.	4
G1	LITHONIA ZLTD SERIES **EQUIVALENT** H.E.WILLIAMS 7SR LED SERIES CORELITE HCL SERIES COLUMBIA MP5 LED SERIES		LED 3000 LUMENS 5000K, 80 CRI	120	30	33	4' LONG LED LINEAR STRIP. PROVIDE WITH ROUND DROP LENS, WHITE FINISH, AND 10' AIRCRAFT CABLES. MOUNT AT 9'-0"AFF UNO.	
W1	LITHONIA WST SERIES **EQUIVALENT** H.E.WILLIAMS WPTZS LUMARK WAL-PAK SERIES HUBBELL LNC2 LED SERIES		LED 1500 LUMENS 4000K, 70 CRI	120	12	13	17"W x 8-1/2"H x 10-3/16" DEEP TRAPEZOIDAL EXTERIOR WALL LED SCONCE. PROVIDE WITH VISUAL COMFORT FORWARD THROW, PREMIUM SURFACE MOUNTED BACK BOX, AND BLACK FINISH. UNLESS NOTED OTHERWISE, MOUNT (TO CENTERLINE) AT 7'-0" ABOVE TOP OF PERSONNEL DOOR FRAME AND 2'-6" ABOVE TOP OF OVERHEAD DOOR OPENING AS APPLICABLE.	3
X1	EMERGI-LITE PREM SERIES		LEDS (INCLUDED)	120	3	3	11-7/8"W x 9"H x 2"D LED EXIT SIGN. SEALED AND MAINTENANCE-FREE NICKEL CADMIUM BATTERY, CHARGER, TEST SWITCH, INDICATOR LIGHT, AND BAR HANGERS. PROVIDE WITH WHITE FINISH, SELF-POWERED ADVANCED DIAGNOSTICS, SINGLE FACE, AND RED LEGEND. PROVIDE ARROWS AS INDICATED ON THE DRAWINGS. WHERE SHOWN AS WALL MOUNTED, MOUNT AT 1'-0" ABOVE TOP OF DOOR FRAME, UNO.	

GENERAL NOTES:

A. **PROVIDE LAMP AND DRIVER PRODUCT DATA SHEETS FOR EACH LIGHT FIXTURE AS PART OF THE SUBMITTAL REVIEW PROCESS.**
B. **FIXTURE AMBIENT TEMPERATURE OPERATING RANGES MUST BE CLEARLY INDICATED ON DATA SHEETS PROVIDED AS PART OF THE SUBMITTAL REVIEW PROCESS.**
C. PACKAGING OF LIGHT FIXTURES WILL NOT BE CONSIDERED OR APPROVED.
D. LIGHTING CONTROLS PRICING, INCLUDING BUT NOT LIMITED TO THOSE REFERENCED IN 260923, SHALL BE COMPLETELY SEPARATE OF ANY LIGHT FIXTURE PRICING.
E. VERIFY CEILING CONDITIONS AND COORDINATE LIGHT FIXTURE MOUNTING HARDWARE AND TRIMS NEEDED TO SUIT CEILING CONDITIONS PRIOR TO ORDERING.
F. VERIFY QUANTITIES, MODEL NUMBERS AND DESCRIPTIONS WITH MANUFACTURER PRIOR TO PLACING ORDER.
G. USE THIS TABLE IN CONJUNCTION WITH THE LIGHTING PLANS AND SPECIFICATIONS TO DETERMINE THE EXACT ORDERING NUMBERS FOR FIXTURES, LAMPS AND ACCESSORIES.
H. REFER TO ARCHITECTURAL DRAWINGS AND DETAILS FOR EXACT LOCATIONS, MOUNTING HEIGHTS AND ADDITIONAL MOUNTING INFORMATION. CONTACT ARCHITECT AND ENGINEER OF RECORD IF THERE ARE DISCREPANCIES BETWEEN THE ARCHITECTURAL AND ELECTRICAL PLANS.
I. PROVIDE ALL LIGHT FIXTURES UNLESS NOTED OTHERWISE.
J. LISTED VOLTAGES ARE THOSE THAT THE FIXTURES ARE TO BE OPERATED AT. WHERE SINGLE VOLTAGES ARE LISTED, UNIVERSAL-VOLTAGE AND MULTI-TAP BALLASTS/DRIVERS ARE ACCEPTABLE IF CAPABLE OF SUPPLYING THE VOLTAGES LISTED IN THIS SCHEDULE.

LIGHTING CONTROL DEVICE SCHEDULE

TAG	MANUFACTURER & MODEL SERIES	SENSOR DESCRIPTION	COVERAGE AREA (WxD OR RADIUS Ø)	VOLTAGE	MODE SETTINGS	TIME DELAY	DEVICE FINISH COLOR	SENSOR NOTES
WALL SWITCH OCCUPANCY SENSORS								
OS1	WATTSTOPPER PW-301	SINGLE RELAY PASSIVE INFRARED OCCUPANCY SENSOR WALL SWITCH WITH MANUAL OVERRIDE BUTTON.	MAJOR 30' x 35' MINOR 15' x 20'	120/277V	MANUAL ON AUTO OFF	5 MIN	GREY	1
OSD	WATTSTOPPER DW-311	DUAL TECHNOLOGY PASSIVE INFRARED AND ULTRASONIC OCCUPANCY SENSOR AND DIMMING WALL SWITCH WITH MANUAL OVERRIDE BUTTON.	MAJOR 30' x 35' MINOR 15' x 20'	120/277V	MANUAL ON AUTO OFF	5 MIN	GREY	1
CEILING MOUNTED OCCUPANCY SENSORS								
A	WATTSTOPPER LMDC-100	CEILING MOUNT DUAL TECHNOLOGY DIGITAL OCCUPANCY SENSOR. 360 DEGREE COVERAGE. PLUG-AND-PLAY CONFIGURATION. (2) RJ45 PORTS, LCD DISPLAY, IR RECEIVER, CONFIGURATION BUTTONS.	PIR MAJOR 44' Ø PIR MINOR 25' Ø ULT MAJOR 48' X 48' ULT MINOR 31' X 31'	24V		20 MIN	WHITE	
B	WATTSTOPPER LMUC-100-2	CEILING MOUNT ULTRASONIC DIGITAL OCCUPANCY SENSOR. 360 DEGREE COVERAGE. PLUG-AND-PLAY CONFIGURATION. (2) RJ45 PORTS, LCD DISPLAY, IR RECEIVER, CONFIGURATION BUTTONS.	ULT MAJOR 32' X 32' ULT MINOR 23' X 23'	24V		20 MIN	WHITE	2
POWER SUPPLIES/ROOM CONTROLLERS								
RC1	WATTSTOPPER LMRC-101	DIGITAL SINGLE-RELAY ON/OFF ROOM CONTROLLER. MAXIMUM 20A LOAD RATING. PLUG-AND-PLAY CONFIGURATION. (3) RJ45 PORTS, LED STATUS INDICATORS, CONFIGURATION BUTTONS, PLENUM RATED.	-	120/277V LOAD, 24VDC CONTROL OUTPUT	AUTO ON AUTO OFF	-	-	
DRC1	WATTSTOPPER LMRC-211	DIGITAL SINGLE-RELAY ON/OFF/DIMMING ROOM CONTROLLER. 0-10V DIMMING. MAXIMUM 20A TOTAL LOAD RATING. PLUG-AND-PLAY CONFIGURATION. (4) RJ45 PORTS, LED STATUS INDICATORS, CONFIGURATION BUTTONS, PLENUM RATED.	-	120/277V LOAD, 24VDC CONTROL OUTPUT	MANUAL ON AUTO OFF	-	-	
LOW VOLTAGE SWITCHES								
LV	WATTSTOPPER LMSW-101	DIGITAL WALL SWITCH. PLUG-AND-PLAY CONFIGURATION. (2) RJ45 PORTS, LED STATUS INDICATOR, INFRARED RECEIVER, HIDDEN CONFIGURATION BUTTONS.	-	24VDC	-	-	GREY	3
LVD	WATTSTOPPER LMDM-101	DIGITAL DIMMING WALL SWITCH. PLUG-AND-PLAY CONFIGURATION. (2) RJ45 PORTS, LED STATUS INDICATOR, INFRARED RECEIVER, HIDDEN CONFIGURATION BUTTONS.	-	24VDC	-	-	GREY	3

GENERAL NOTES:

A. SENSOR LAYOUT BASED ON WATTSTOPPER COVERAGE PATTERNS. ADJUST QUANTITIES AND LOCATIONS FOR ALTERNATE MANUFACTURERS LISTED BELOW PER MANUFACTURER SPECIFIC SPACING CRITERIA.

B. ACUITY, COOPER-GREENGATE, CRESTRON, HUBBELL BUILDING AUTOMATION, AND LEVITON ARE CONSIDERED EQUIVALENT MANUFACTURERS FOR SUBMISSION AS AN APPROVED MANUFACTURER, CONTINGENT ON LISTINGS APPROPRIATE FOR THE APPLICATION.
C. DURING SHOP DRAWINGS, PROVIDE LIGHTING PLANS SHOWING LOCATION, MOUNTING HEIGHT, ORIENTATION AND COVERAGE AREAS FOR EACH OCCUPANCY SENSOR FOR REVIEW AND APPROVAL BY ENGINEER. ALSO INCLUDE ON PLANS OTHER CEILING MOUNTED SYSTEMS, SHOWING COORDINATION WITH CEILING DEVICES INCLUDING BUT NOT LIMITED TO HVAC SUPPLY AND RETURN GRILLES, SPRINKLERS, AND LIGHT FIXTURES.
D. PROVIDE ALL SENSORS BY THE SAME MANUFACTURER.
E. PROVIDE COPIES OF SENSOR AND POWER SUPPLY OPERATION INSTRUCTIONS TO OWNER.
F. PROVIDE WALL SWITCH AND CEILING SENSORS WITH AN ADJUSTABLE TIME DELAY RANGE OF 5-30 MIN, UNO.
G. DO NOT INSTALL LINE VOLTAGE SENSORS ON GFCI PROTECTED CIRCUITS.
H. LIGHTING CONTROLS PRICING, INCLUDING BUT NOT LIMITED TO THOSE REFERENCED IN 260923, SHALL BE COMPLETELY SEPARATE OF ANY LIGHT FIXTURE PRICING.
I. REFER TO SPECIFICATION SECTION 260923 FOR ADDITIONAL INFORMATION ON LIGHTING CONTROLS.
J. FIELD-SET DEVICES TO THE ON MODE INDICATED IN TABLE. DISABLE ANY VISABLE/AUDIBLE ALERT SETTINGS, AND SET SENSITIVITIES TO MAXIMUM LEVELS.
K. PROVIDE ALL LOW VOLTAGE WIRING BETWEEN SENSORS, DEVICES, AND POWER SUPPLIES AS REQUIRED AND PER MANUFACTURER RECOMMENDATIONS.
L. WHERE OCCUPANCY SENSORS USE BOTH PIR AND ULTRASONIC TECHNOLOGIES, PROGRAM OFF MODES (MAINTAIN OCCUPANCY AND RE-TRIGGER) TO TRIGGER ON A SIGNAL FROM EITHER TECHNOLOGY.

M. WHERE MULTIPLE LOW VOLTAGE SWITCHES ARE CONNECTED WITHIN THE SAME SPACE, PROGRAM THE SWITCHES TO CONTROL THE LIGHTING IN THE EXACT SAME MANNER, UNO.

SENSOR NOTES:

1. WALL SWITCH SENSOR REQUIRES A NEUTRAL CONDUCTOR FOR OPERATION.
2. FOR LARGE RESTROOMS, SET TIME DELAY TO 30 MINS.
3. PROVIDE CUSTOM BUTTON ENGRAVING PER ENGINEER'S DIRECTION.

-PRELIMINARY-
NOT FOR CONSTRUCTION

REV	Designer DESIGNED BY	Checker CHECKED BY	DATE

Retrofitable Advanced Combined Cycle Integration for Flexible Decarbonized Generation DE-FE-0032131

Kiewit

ELECTRICAL SCHEDULES

OPEN

ENGINEER DESIGNATION
LEAD ENG
ENG MGR
PROJ MGR

DRAWING NUMBER
BE-500

DUCTWORK INSULATION SCHEDULE

DUCT				INSULATION			JACKET		
PURPOSE	DUTY	LOCATION	STYLE	MATERIAL	APPLICATION	THICKNESS	MATERIAL	THICKNESS	NOTES
SUPPLY	MEDIUM PRESSURE/ VELOCITY	CONCEALED	RECTANGULAR	FIBERGLASS	DUCT LINER	1"			-
		CONCEALED	RECTANGULAR	MINERAL FIBER	WRAPPED	2"	FOIL FACING		-
		CONCEALED	ROUND	MINERAL FIBER	WRAPPED	2"	FOIL FACING		-
		EXPOSED	RECTANGULAR	FIBERGLASS	LINED	1"			-
		EXPOSED	ROUND	FIBERGLASS	WRAPPED	2"	INTEGRAL FSK		-
		PROCESS	RECTANGULAR	POLYISOCYANURATE	PRE-FORMED	1-1/2"	STAINLESS STEEL	22 GAUGE	-
		PROCESS	ROUND	POLYISOCYANURATE	PRE-FORMED	1-1/2"	STAINLESS STEEL	22 GAUGE	-
	LOW PRESSURE/ VELOCITY	CONCEALED	RECTANGULAR	FIBERGLASS	LINED	1/2"			-
		CONCEALED	ROUND	MINERAL FIBER	WRAPPED	1-1/2"	FOIL FACING		-
		EXPOSED	RECTANGULAR	FIBERGLASS	LINED	1/2"			-
		EXPOSED	ROUND	FIBERGLASS	WRAP	1"	INTEGRAL FSK		-
		PROCESS	RECTANGULAR	POLYISOCYANURATE	PRE-FORMED	1-1/2"	STAINLESS STEEL	22 GAUGE	-
		PROCESS	ROUND	POLYISOCYANURATE	PRE-FORMED	1-1/2"	STAINLESS STEEL	22 GAUGE	-
	ALL	UNCONDITIONED SPACES (CZ 1-4)	ALL	FIBERGLASS & MINERAL FIBER	LINED & WRAPPED	1/2" & 2"	FOIL FACING		-
		UNCONDITIONED SPACES (CZ 5-8)	ALL	FIBERGLASS & MINERAL FIBER	LINED & WRAPPED	1" & 3"	FOIL FACING		-
		EXTERIOR (CZ 1-4)	ALL	FLEXIBLE ELASTOMERIC	WRAPPED	2"	ALUMINUM	30 MIL	-
		EXTERIOR (CZ 5-8)	ALL	FLEXIBLE ELASTOMERIC	WRAPPED	2 LAYERS 1-1/2"	ALUMINUM	30 MIL	-
RETURN	LOW PRESSURE/ VELOCITY	CONCEALED	RECTANGULAR	FIBERGLASS	DUCT LINER	1/2"			-
		CONCEALED	ROUND	MINERAL FIBER	WRAPPED	1-1/2"	INTEGRAL FSK		-
		EXPOSED	RECTANGULAR	FIBERGLASS	DUCT LINER	1/2"			-
		RETURN/MANIFOLD BOOTS	RECTANGULAR	FIBERGLASS	DUCT LINER	1/2"			-
		PROCESS	RECTANGULAR	POLYISOCYANURATE	PRE-FORMED	1-1/2"	STAINLESS STEEL	22 GAUGE	-
		PROCESS	ROUND	POLYISOCYANURATE	PRE-FORMED	1-1/2"	STAINLESS STEEL	22 GAUGE	-
	ALL	UNCONDITIONED ATTICS (CZ 1-4)	ALL	FIBERGLASS & MINERAL FIBER	LINED & WRAPPED (R-8 MIN)	1/2" & 2.2"	FOIL FACING		-
		UNCONDITIONED ATTICS (CZ 5-8)	ALL	FIBERGLASS & MINERAL FIBER	LINED & WRAPPED (R-12 MIN)	1" & 3"	FOIL FACING		-
		EXTERIOR (CZ 1-4)	ALL	FLEXIBLE ELASTOMERIC	WRAPPED (R-9 MIN)	2"	ALUMINUM	30 MIL	-
		EXTERIOR (CZ 5-8)	ALL	FLEXIBLE ELASTOMERIC	WRAPPED (R-12 MIN)	2 LAYERS 1-1/2"	ALUMINUM	30 MIL	-
EXHAUST	LOW PRESSURE/VELOCITY	CONCEALED	RECTANGULAR	MINERAL-FIBER DUCTWRAP	WRAPPED	1"	INTEGRAL FSK		-
		CONCEALED	ROUND	MINERAL-FIBER DUCTWRAP	WRAPPED	1/2"	INTEGRAL FSK		-
		EXPOSED	RECTANGULAR	FIBERGLASS	DUCT LINER	1/2"			-
		EXPOSED	ROUND	FIBERGLASS	DUCT LINER	1"			-
		UNCONDITIONED SPACE	ALL	MINERAL-FIBER DUCTWRAP	WRAPPED	1-1/2"	INTEGRAL FSK		-
OUTSIDE AIR	ALL	CONCEALED OR MECH. SPACE	RECTANGULAR	MINERAL-FIBER DUCTWRAP	WRAPPED	1-1/2"	INTEGRAL FSK		-
		CONCEALED OR MECH. SPACE	ROUND	MINERAL-FIBER DUCTWRAP	WRAPPED	1-1/2"	INTEGRAL FSK		-
		EXPOSED (NON MECH. SPACE)	RECTANGULAR	MINERAL FIBER BOARD	PRE-FORMED	1-1/2"	PVC	30 MIL	-
		EXPOSED (NON MECH SPACE)	ROUND	MINERAL FIBER BOARD	PRE-FORMED	2"	PVC	30 MIL	-

NOTES:
1. -

GENERAL NOTES:
1) ALL DUCTWORK, INSULATION AND MATERIALS IN PLENUMS MUST MEET ASTM E84 FLAME/SMOKE RATING OF 25/50.
2) REFER TO SPECIFICATIONS FOR MORE DETAILED INFORMATION FOR INSULATION PRODUCTS AND SYSTEMS.
3) SEAL ALL SHEET METAL JOINTS PRIOR TO INSULATING DUCTS.
4) PROVIDE SEALED VAPOR BARRIER FOR INSULATION.

MATERIALS OF CONSTRUCTION

RIGID DUCT:
•Rectangular and round ductwork material shall be galvanized steel sheets, lock-forming quality per ASTM A653/ASTM A653 M, G90, mill-phosphatized finish.

FLEXIBLE DUCT:
•Flexible duct shall be steel-wire helix with polyethylene inner liner, 1.5" thick fiberglass insulation with mylar or polyethylene outer jacket (+6"wg pressure rating).

PRESSURE CLASSIFICATIONS:
•Supply Ducts: +2" w.g.
•Return Ducts: -2" w.g.
•Outside Air Ducts: -2" w.g.
•Exhaust Ducts: +/-2" w.g.

HVAC DESIGN WILL BE PER THE FOLLOWING STANDARDS:
•International Building Code 2018 Edition
•International Mechanical Code 2018 Edition
•ACGIH Industrial Ventilation: American Conference of Governmental Industrial Hygienists
•ASHRAE: American Society of Heating, Refrigeration, and Air-Conditioning Engineers
•SMACNA: Sheet Metal and Air Conditioning Contractors National Association
•NFPA: National Fire Protection Association

TESTING AND BALANCING
•Testing and Balancing (TAB) of the mechanical systems will be performed under the direction of a certified test and balance contractor.

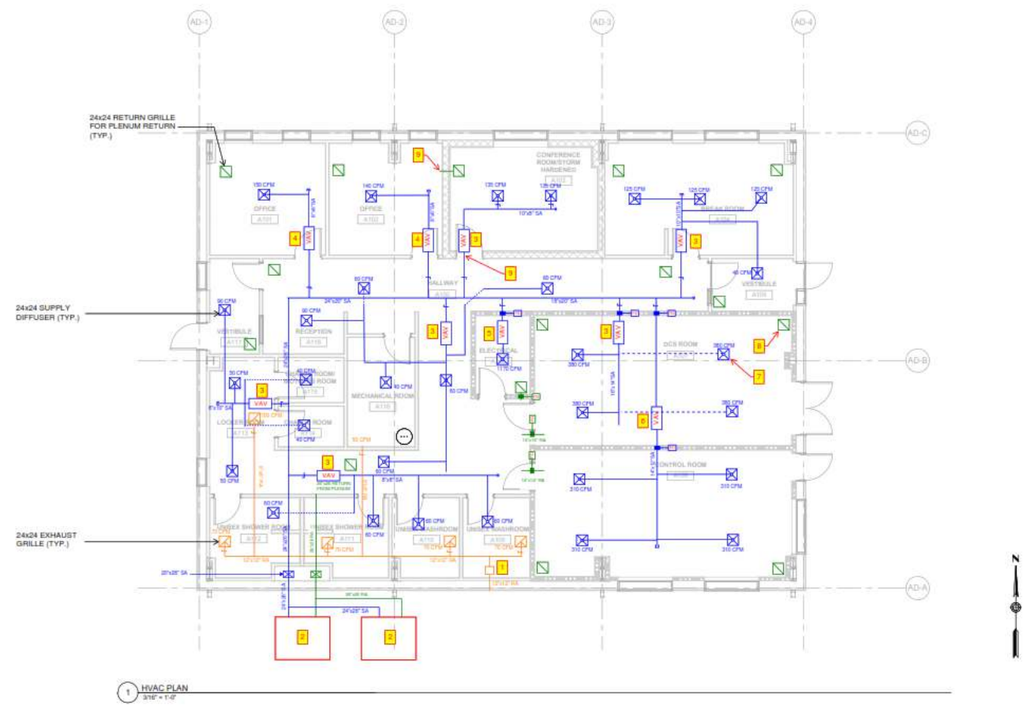

1 HVAC PLAN
3/16" = 1'-0"

GENERAL HVAC NOTES:

1. MANUFACTURERS AND MODELS SHOWN ON THE DRAWINGS ARE THE BASIS OF DESIGN. PRODUCTS FROM OTHER MANUFACTURERS THAT ARE EQUAL IN QUALITY, CAPACITY, AND PERFORMANCE ARE ACCEPTABLE FOR ESTIMATING PURPOSES. MANUFACTURERS USED FOR ESTIMATING SHALL BE ON THE CLIENT'S APPROVED VENDOR LIST LOCATED WITHIN THE RFP DOCUMENT.

2. PROVIDE A 6" THICK REINFORCED CONCRETE EQUIPMENT PAD FOR ALL OUTDOOR HVAC EQUIPMENT.

HVAC CONTROL NOTES:

1. CONTRACTOR SHALL PROVIDE A CENTRALIZED HMI CONTROL PANEL WITH THE CAPABILITY OF CONTROLLING ALL THE BUILDINGS HVAC SYSTEMS. THE CENTRAL CONTROLLER SHALL INCLUDE CONTROL SOFTWARE THAT RUNS ON A BACnet PROTOCOL AND INCLUDES VISUAL ON-SCREEN GRAPHICS TO LOCATE CONTROL POINTS AND FEATURES FOR ALL ZONES WITH THE BUILDING.

2. EQUIPMENT BELOW SHALL BE PROVIDED WITH A LOCAL CONTROLLER THAT IS CAPABLE OF SENDING AND RECEIVING THE LISTED SIGNALS/CONTROL AND SHALL ALARM UNDER PROGRAMMED HIGH AND LOW LIMIT CONDITIONS:

PACKAGED AIR HANDLING UNIT WITH ENERGY WHEEL
•AIR HANDLER START/STOP (ON/OFF)
•AIR HANDLER STATUS (ON/OFF)
•SUPPLY FAN VFD OUTPUT (%)
•SUPPLY AIR FLOW (CFM)
•SUPPLY AIR DAMPER (OPEN/CLOSED)
•EXHAUST FAN VFD OUTPUT (%)
•EXHAUST AIR FLOW (CFM)
•EXHAUST AIR DAMPER (OPEN/CLOSED)
•RETURN AIR TEMPERATURE (DEF F)
•RETURN AIR HUMIDITY (%RH)
•MODULATING RETURN AIR DAMPER (%OPEN)
•MIXED AIR TEMPERATURE (DEG F)
•MODULATING OUTDOOR AIR DAMPER (% OPEN)
•VENTILATION AIR FLOW (CFM)
•VENTILATION AIR FLOW SETPOINT (CFM)
•COOLING COIL AIR TEMPERATURE (DEG F)
•COOLING COIL AIR TEMPERATURE SETPOINT (DEG F)
•SUPPLY AIR TEMPERATURE (DEG F)
•SUPPLY AIR TEMPERATURE SETPOINT (DEG F)
•SUPPLY AIR RELATIVE HUMIDITY (%RH)
•ENERGY WHEEL VFD OUTPUT (%)
•REHEAT AIR TEMPERATURE (DEG F)
•FILTER DIFFERENTIAL PRESSURE (IN WG)
•SUPPLY STATIC AFTER FAN (IN WG)
•STATIC 2/3 IN DUCT (IN WG)
•STATIC 2/3 IN DUCT SETPOINT (IN WG)
PACKAGED UNIT SHALL INCLUDE SENSORS THAT MONITOR AND CONTROL REFRIGERANT TEMPERATURES/PRESSURES, COMPRESSOR/VALVE STATUSES, AND DAMPER POSITIONS.

VAV WITH ELECTRIC RE-HEAT
•SUPPLY AIR FLOW (CFM)
•SUPPLY AIR DAMPER (% OPEN)
•SUPPLY AIR TEMPERATURE (DEG F)
•SCR ELECTRIC REHEAT OUTPUT (%)
•OCCUPANCY STATUS (OCC/UNOCC)
•ZONE TEMPERATURE (DEG F)
•ZONE TEMPERATURE SETPOINT (DEG F)
•ZONE HUMIDITY (%RH)
•TEMPORARY OCCUPANCY OVERRIDE (OCC/UNOCC)

GENERAL EXHAUST FAN
•START/STOP (ON/OFF)
•STATUS (ON/OFF)

SPLIT SYSTEM HEAT PUMP
•SUPPLY AIR FLOW (CFM)
•SUPPLY FAN SPEED (LOW/MID1/MID2/HIGH)
•SUPPLY AIR TEMPERATURE (DEG F)
•OCCUPANCY STATUS (OCC/UNOCC)
•ZONE TEMPERATURE (DEG F)
•ZONE TEMPERATURE SETPOINT (DEG F)
•ZONE HUMIDITY (%RH)
•TEMPORARY OCCUPANCY OVERRIDE (OCC/UNOCC)

ELECTRIC WALL HEATER
INTEGRAL THERMOSTATIC CONTROLS. NO BACNET CONNECTION.

HVAC PLAN NOTES:

1. FURNISH AND INSTALL IN-LINE RESTROOM EXHAUST FAN @ 720 CFM. SHALL OPERATE CONTINUOUSLY WHILE BUILDING IS OCCUPIED. FAN BASIS OF DESIGN: **GREENHECK SQ-120-VG.**
2. FURNISH AND INSTALL 12-TON PACKAGED AIR HANDLING UNIT @ 5,500 CFM. PAHU SHALL BE EQUIPPED WITH AIR-COOLED CONDENSER, DX EVAPORATOR COIL, HEAT PUMP HEATING, AND 20 kW ELECTRIC HEATING COIL. PROVIDE HOT GAS REHEAT, VARIABLE SPEED COMPRESSORS FOR DEHUMIDIFICATION CONTROL, MANUFACTURER DISCONNECTS AND VFDS, WASHABLE MERV 8 FILTER AND SUPPLY/RETURN DUCT SMOKE DETECTORS. UNIT SHALL BE CONFIGURED FOR HORIZONTAL SUPPLY AND RETURN.
3. FURNISH AND INSTALL TRANE VAV TERMINAL BOX MODEL: VCEF-06 WITH 4KW ELECTRIC HEATING ELEMENT, 277 V / 1PHASE.
4. FURNISH AND INSTALL TRANE VAV TERMINAL BOX MODEL: VCEF-04 WITH 2KW ELECTRIC HEATING ELEMENT, 277 V / 1PHASE.
5. FURNISH AND INSTALL TRANE VAV TERMINAL BOX MODEL: VCEF-10 WITH 12 KW ELECTRIC HEATING ELEMENT, 480 V / 3 PHASE.
6. FURNISH AND INSTALL TRANE VAV TERMINAL BOX MODEL: VCEF-08 WITH 7.5 KW ELECTRIC HEATING ELEMENT, 480 V / 3 PHASE.
7. FURNISH AND INSTALL TITUS OMNI ARCHITECTURAL DIFFUSER (TYPICAL).
8. FURNISH AND INSTALL TITUS PXP PERFORATED RETURN PANEL (TYPICAL).
9. PROVIDE PENETRATIONS THROUGH MASONRY WALLS OF HARDENED STORM STRUCTURE (TYPICAL).

-PRELIMINARY-
NOT FOR CONSTRUCTION

REV	D. HILL DESIGNED BY	NAME CHECKED BY	DATE

ADVANCED NGCC DE-FE-0032131
GE SOUTHERN LINDE

Kiewit

ADMINISTRATION-CONTROL BUILDING HVAC PLAN

OPEN

ENGINEER/ DESIGN ORIGINATOR	NAME	DRAWING NUMBER
LEAD ENG.	M. HOLDSWORTH	BH-100
ENG MGR	B. LOFGREEN	
PROJ MGR	B. LOFGREEN	

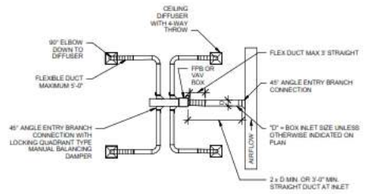

11 TYPICAL VAV OR FAN POWERED BOX DUCTWORK LAYOUT DETAIL
NTS

HANGER SIZES FOR ROUND DUCT		
DUCT DIAMETER	STRAP HANGERS	MAXIMUM SPACING
UP THRU 20"	ONE 1" X 22 GA.	12 FT.
21" THRU 36"	ONE 1" X 18 GA.	12 FT.
37" THRU 50"	ONE 1" X 16 GA.	12 FT.
51" THRU 60"	ONE 1" X 16 GA.	12 FT.
61" THRU 84"	ONE 1" X 16 GA.	12 FT.

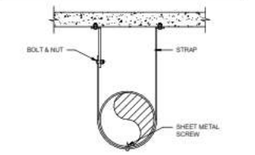

7 ROUND DUCT STRAP HANGER DETAIL
NTS

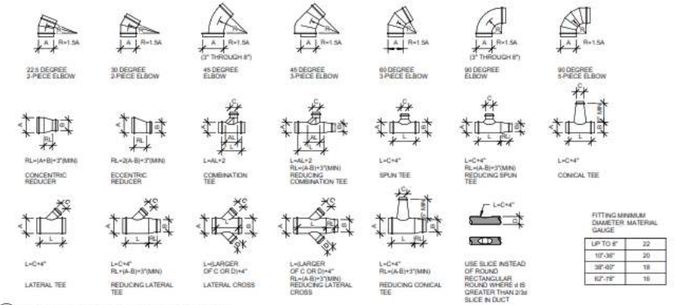

4 MEDIUM AND HIGH VELOCITY DUCT FITTINGS DETAIL
NTS

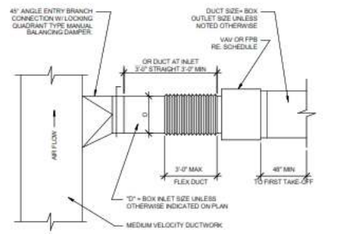

10 VAV OR FAN POWERED BOX INSTALLATION DETAIL
NTS

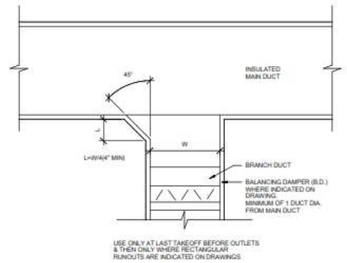

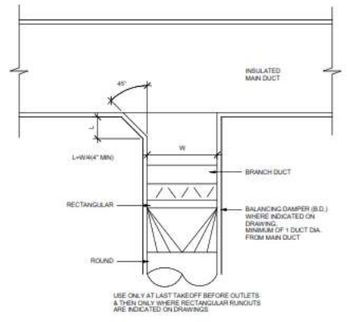

6 TYPICAL BRANCH CONNECTION
NTS

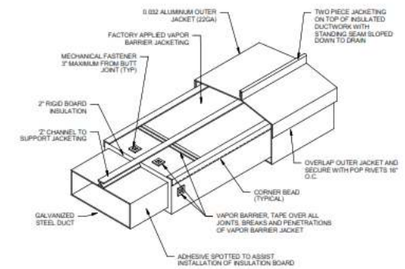

3 EXTERIOR JACKETED SUPPLY DUCT
NTS

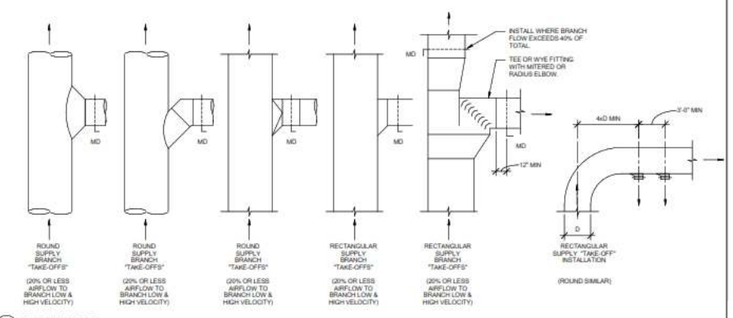

2 DUCT STANDARDS
NTS

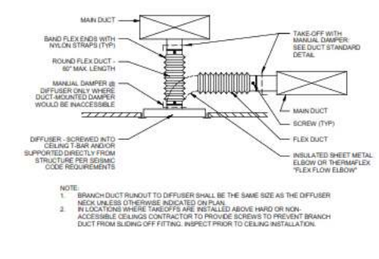

8 DIFFUSER DETAIL
NTS

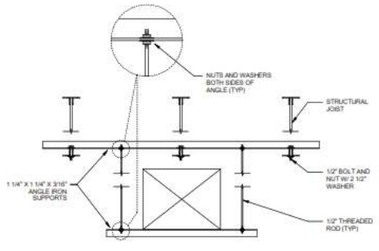

5 DUCT HANGER DETAIL
NTS

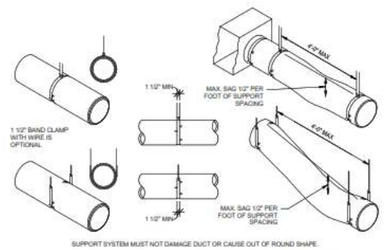

1 FLEXIBLE DUCT SUPPORT DETAIL
NTS

-PRELIMINARY-
NOT FOR CONSTRUCTION

REV	DESIGNED BY: D. HILL	CHECKED BY: NAME	DATE

ADVANCED NGCC DE-FE-0032131
GE SOUTHERN LINDE

Kiewit

ADMINISTRATION-CONTROL BUILDING HVAC DETAILS

OPEN

ENGINEER DESIGN ORGANIZATION	NAME
LEAD ENG	M. HOLDSWORTH
ENG MGR	B. LOFGREEN
PROJ MGR	B. LOFGREEN

DRAWING NUMBER
BH-200

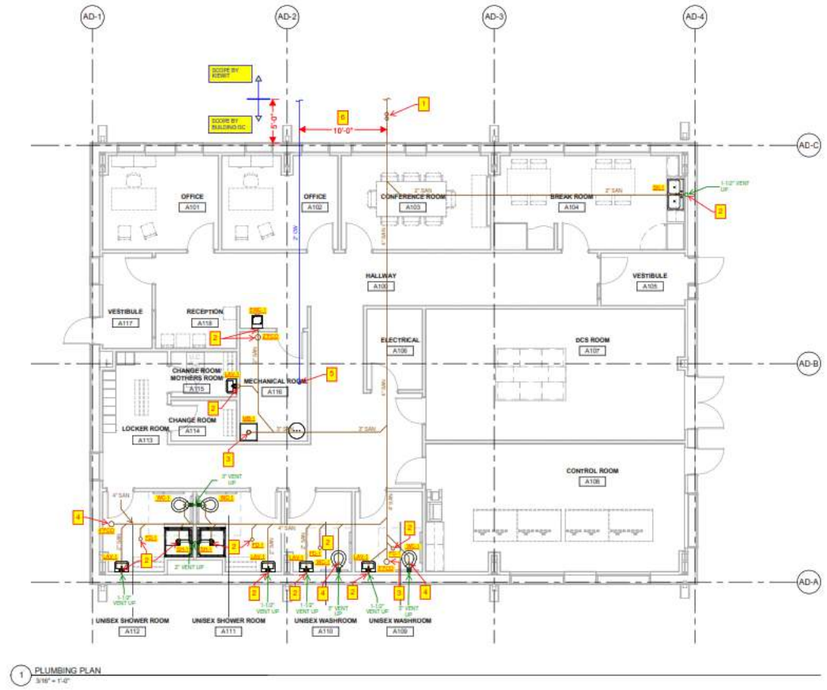

1 PLUMBING PLAN
3/16" = 1'-0"

PLUMBING GENERAL NOTES:

1) POTABLE WATER SUPPLY AND SANITARY SEWER SHALL BE PROVIDED TO 5' OUTSIDE OF THE BUILDING
2) SERVICE UTILITY ENTRANCE LOCATIONS SHOWN ARE APPROXIMATE AND SHALL BE CONFIRMED DURING DETAILED DESIGN.
4) PROVIDE ISOLATION BALL VALVES AT EACH PLUMBING FIXTURE.
5) ALL SANITARY PIPING SHALL BE SLOPDE 1/8" PER FOOT.
6) REFER TO PLUMBING FIXTURE SCHEDULE FOR CONNECTION SIZES.

PLUMBING PLAN NOTES:

1. PROVIDE 2-WAY 4" CLEANOUT APPROXIMATELY 3'-0" OUTSIDE THE BUILDING.
2. PROVIDE 2" SANITARY LINE UP.
3. PROVIDE 3" SANITARY LINE UP.
4. PROVIDE 4" SANITARY LINE UP.
5. PROVIDE 2" COLD WATER LINE UP TO DOUBLE CHECK VALVE BACKFLOW PREVENTER.
6. PROVIDE MINIMUM SEPARATION OF 10'-0" BETWEEN BELOW GRADE POTABLE WATER AND SANITARY PIPING.

-PRELIMINARY-
NOT FOR CONSTRUCTION

REV	D. HILL DESIGNED BY	NAME CHECKED BY	DATE

ADVANCED NGCC DE-FE-0032131
GE SOUTHERN LINDE

Kiewit

ADMINISTRATION-CONTROL BUILDING BELOW GRADE SANITARY AND VENT PLUMBING PLAN

ENGINEER/ DESIGN ORIGINATOR	NAME
LEAD ENG	M. HOLDSWORTH
ENG MGR	B. LOFGREEN
PROJ MGR	B. LOFGREEN

DRAWING NUMBER
BP-100

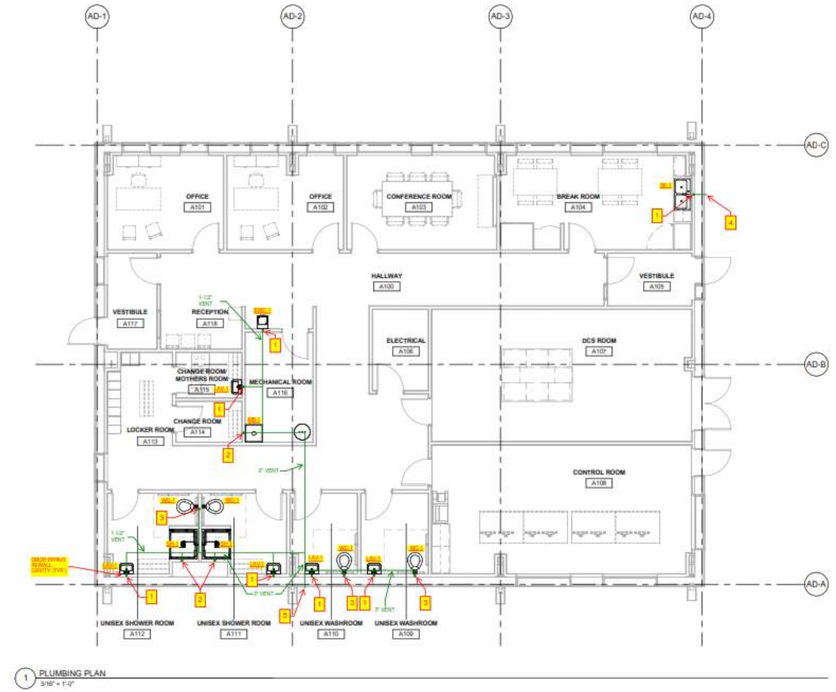

1 PLUMBING PLAN
3/16" = 1'-0"

PLUMBING GENERAL NOTES:

1) POTABLE WATER SUPPLY AND SANITARY SEWER SHALL BE PROVIDED TO 5' OUTSIDE OF THE BUILDING
2) SERVICE UTILITY ENTRANCE LOCATIONS SHOWN ARE APPROXIMATE AND SHALL BE CONFIRMED DURING DETAILED DESIGN.
4) PROVIDE ISOLATION BALL VALVES AT EACH PLUMBING FIXTURE.
5) ALL SANITARY PIPING SHALL BE SLOPDE 1/8" PER FOOT.
6) REFER TO PLUMBING FIXTURE SCHEDULE FOR CONNECTION SIZES.

PLUMBING PLAN NOTES:

1. PROVIDE 1-1/2" VENT DOWN TO SANITARY PIPING.
2. PROVIDE 2" VENT DOWN TO SANITARY PIPING.
3. PROVIDE 2" VENT DOWN TO SANITARY PIPING.
4. PROVIDE 1-1/2" VENT OUT THROUGH WALL NEAR EAVE. PROVIDE VENT HOOD AND INSECT SCREEN.
5. PROVIDE 3" VENT OUT THROUGH WALL NEAR EAVE. PROVIDE VENT HOOD AND INSECT SCREEN.

-PRELIMINARY-
NOT FOR CONSTRUCTION

REV		D. HILL DESIGNED BY	NAME CHECKED BY	DATE

ADVANCED NGCC DE-FE-0032131
GE SOUTHERN LINDE

Kiewit

ADMINISTRATION-CONTROL BUILDING ABOVE GRADE SANITARY AND VENT PLUMBING PLAN

ENGINEERS DESIGN ORIGINATOR	NAME	DRAWING NUMBER
LEAD ENG	M. HOLDSWORTH	BP-101
ENG MGR	R. LOFGREEN	
PROJ MGR	R. LOFGREEN	

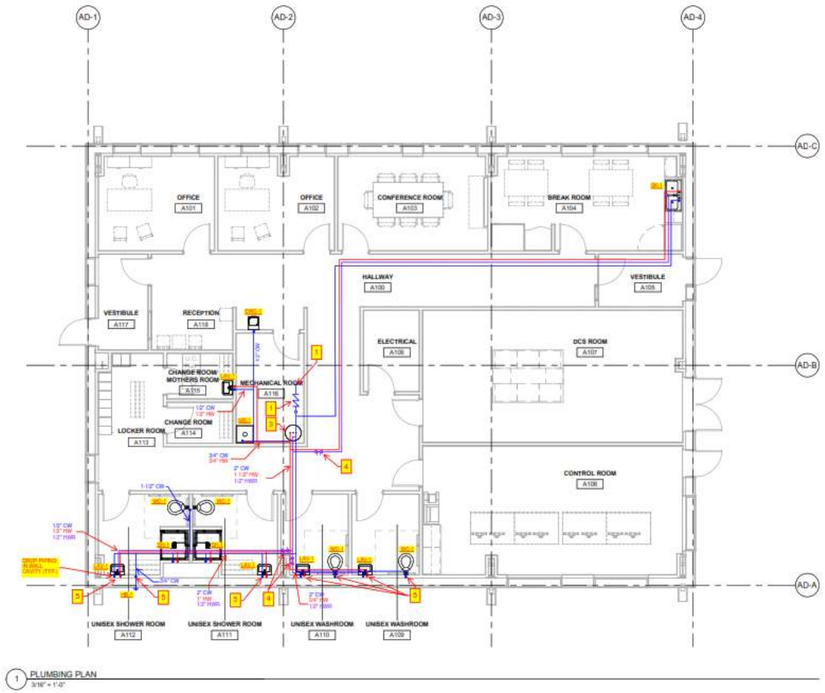

1 PLUMBING PLAN
3/16" = 1'-0"

PLUMBING GENERAL NOTES:

1) POTABLE WATER SUPPLY AND SANITARY SEWER SHALL BE PROVIDED TO 5' OUTSIDE OF THE BUILDING
2) SERVICE UTILITY ENTRANCE LOCATIONS SHOWN ARE APPROXIMATE AND SHALL BE CONFIRMED DURING DETAILED DESIGN.
4) PROVIDE ISOLATION BALL VALVES AT EACH PLUMBING FIXTURE.
5) ALL SANITARY PIPING SHALL BE SLOPDE 1/8" PER FOOT.
6) REFER TO PLUMBING FIXTURE SCHEDULE FOR CONNECTION SIZES.

PLUMBING PLAN NOTES:

1. PROVIDE 2" COLD WATER LINE DOWN BELOW GRADE.
2. PROVIDE 2" DOUBLE CHECK VALVE BACKFLOW PREVENTER.
3. PROVIDE TANKED WATER HEATER. BASIS OF DESIGN: BRADFORD WHITE MODEL #LE255T3-3, 55 GAL, 6000W, 25 GPH RECOVERY AT 100F RISE, 480v/3ph. PROVIDE WITH CIRC PUMP (WITH AQUASTAT AND TIMER), BELL GOSSETT NBF-9U/LW, 3GPM @ 8FT HD, 120v/1ph AND DIAPHRAGM EXPANSION TANK.
4. PROVIDE CIRCUIT SETTER VALVE (SET FOR 1 GPM).
5. ALL PIPING WITHIN EXTERIOR WALL SHALL BE LOCATED ON THE INTERIOR FACE OF THE EXTERIOR INSULATION WITHIN THE WALL CAVITY.

-PRELIMINARY-
NOT FOR CONSTRUCTION

REV	D. HILL DESIGNED BY	NAME CHECKED BY	DATE

ADVANCED NGCC DE-FE-0032131
GE SOUTHERN LINDE

Kiewit

ADMINISTRATION-CONTROL BUILDING ABOVE GRADE DOMESTIC WATER PLUMBING PLAN

ENGINEERING DESIGN ORIGINATOR	NAME	DRAWING NUMBER
LEAD ENG	M. HOLDSWORTH	BP-102
ENG MGR	B. LOFGREEN	
PROJ MGR	B. LOFGREEN	

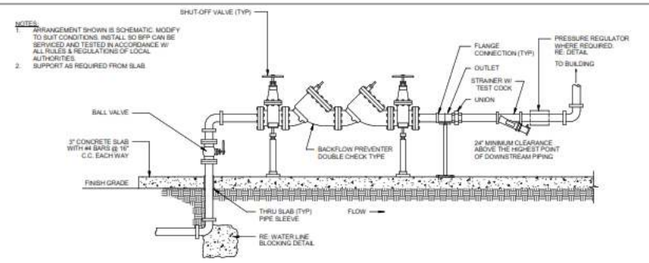

10 INTERIOR DOUBLE CHECK BACKFLOW PREVENTER DETAIL
NTS

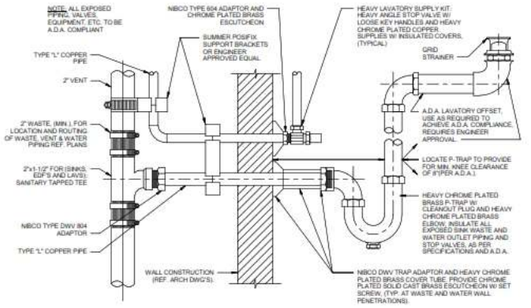

9 TYPICAL LAVATORY AND SINK CONNECTION DETAIL
NTS

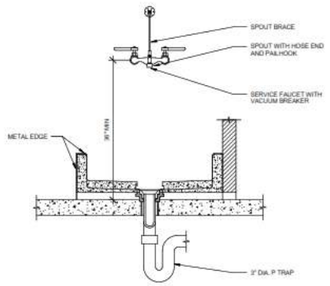

6 MOP SINK DETAIL
NTS

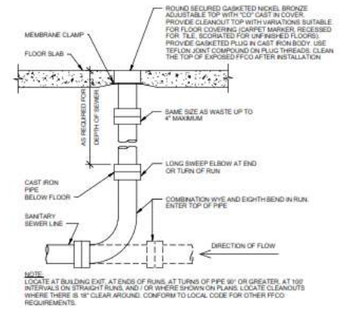

3 FLOOR CLEANOUT DETAIL
NTS

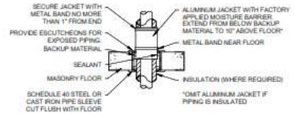

8 FLOOR PIPE PENETRATION DETAIL
NTS

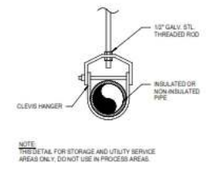

5 CLEVIS HANGER DETAIL
NTS

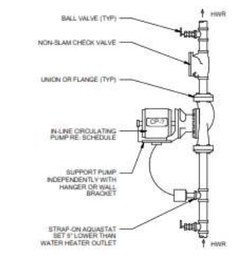

2 CIRCULATING PUMP DETAIL
NTS

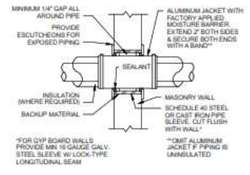

7 WALL PIPE PENETRATION DETAIL
NTS

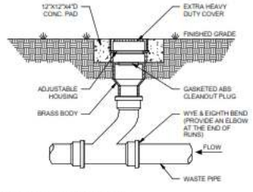

4 CLEANOUT AT GRADE DETAIL
NTS

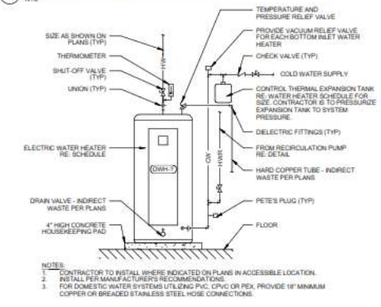

1 ELECTRIC WATER HEATER DETAIL
NTS

SHEET NOTES:

1. REFER TO SHEETS BA SERIES FOR ARCHITECTURAL DRAWINGS, NOTES, DETAILS, SCHEDULES AND REQUIREMENTS.
2. REFER TO SHEETS BE SERIES FOR BUILDING ELECTRICAL DRAWINGS, NOTES, DETAILS, SCHEDULES AND REQUIREMENTS.
3. REFER TO SHEETS BH SERIES FOR HVAC MECHANICAL DRAWINGS, NOTES,DETAILS, SCHEDULES AND REQUIREMENTS.
4. REFER TO SHEETS BP SERIES FOR PLUMBING DRAWINGS, NOTES, DETAILS, SCHEDULES AND REQUIREMENTS.

-PRELIMINARY-
NOT FOR CONSTRUCTION

REV	D. HILL DESIGNED BY	NAME CHECKED BY	DATE

ADVANCED NGCC DE-FE-0032131
GE SOUTHERN LINDE

Kiewit

ADMINISTRATION-CONTROL BUILDING PLUMBING DETAILS

OPEN

ENGINEER DESIGN ORIGINATOR	NAME
LEAD ENG	M. HOLDSWORTH
ENG MGR	R. LOFGREEN
PROJ MGR	R. LOFGREEN

DRAWING NUMBER
BP-300

PLUMBING FIXTURE SCHEDULE

SYMBOL	DESCRIPTION	BASIS OF DESIGN	FIXTURE		FITTING		TRAP	CARRIER	REMARKS	MOUNTING	CONNECTION SIZE			
			TYPE	SIZE (in)	TYPE	SUPPLY				HEIGHT	C.W. (in)	H.W. (in)	WASTE (in)	VENT (in)
EWC-1	ELECTRIC WATER COOLER	ELECTRIC WATER COOLER: ELKAY DRINKING FOUNTAIN MODEL # EZSTL8L	BI-LEVEL WALL HUNG BARRIER-FREE UNIT	19"W X 19"D X 21-1/2"T	LEAD-FREE BUBBLER FRONT PUSH BAR	1/2"	1 1/4" CAST BRASS W/ CLEANOUT PLUG	WALL MOUNTED WITH BRACKET	STANDARD GRAY BEIGE COLOR	ORIFICE HT. 35-3/8" AFF ACCESSIBLE	1/2"	N/A	1 1/2	1 1/2
LAV-1	PUBLIC LAVATORY	LAVATORY: AMERICAN STANDARD, LUCERNE MODEL 0355.012 ; FAUCETS: AMERICAN STANDARD, LOW FLOW MODEL #: 605B205.002	WALL-MOUNTED, WHITE VITREOUS CHINA	RECTANGULAR SHAPE 20.5" X 18.3"	POINT OF USE THERMOSTATIC MIXING VALVE HAVING A TEMPERATURE SETPOINT OF 104°F, PROVIDE MANUFACTURER'S HARDWIRED AC POWER SUPPLY	1/2" SUPPLY LOOSE KEY ANGLE STOP C.P. ESCUTCHEON	1 1/4" POLISHED CHROME PLATED BRASS TRAP	HANGER PLATE LAVATORY CARRIER	CHROME FINISH FAUCET, CHROME FINISH DRAIN STRAINER, PLUMBEREX X4333 INSULATED P-TRAP AND VALVE SUPPLY COVER	HEIGHT SET BY COUNTER TOP, SEE ARCHITECTURAL	1/2	1/2	1 1/2	1 1/2
MB-1	MOP BASIN	BASIN: GRIFFIN PRODUCTS, INC., MODEL UM-202; FAUCET: CHICAGO FAUCETS, MODEL # 540-LD897SCP	16 GAUGE, 304 STAINLESS STEEL	20" X 20" X 8"-DEEP WITH 1 1/2" SPLASH PANELS	SWIVEL SPOUT, WALL MOUNT, 8" CENTERS, POINT OF USE THERMOSTATIC MIXING VALVE	1/2"	3" CAST IRON P-TRAP	N/A	VACUUM BREAKER, PAIL HOOK, WALL BRACED	SUPPLY - 36" AFF BASIN - FLOOR MOUNTED	1/2	1/2	3	2
SK-1	SINK	SINK: ELKAY, MODEL LRAD332260 ; FAUCET: CHICAGO FAUCETS, MODEL 786-GN8AE3ABCP	DUAL 18 GAUGE, TYPE 304 STAINLESS STEEL	33" X 22" X 6" DOUBLE BOWL SIZE - EACH BOWL - 13 1/2" X 16" X 5 5/8"	2.2 GPM, L TYPE SWING SPOUT, DECK MOUNT, 8" CENTERS, 3.4" BODY, ADJUSTABLE	1/2" SUPPLY LOOSE KEY STOP C.P. ESCUTCHEON	1 1/2" PVC TRAP	N/A	STAINLESS FINISH FAUCET, STAINLESS STEEL BASKET STRAINER	HEIGHT SET BY COUNTER TOP, SEE ARCHITECTURAL	1/2	1/2	1 1/2	1 1/2
SH-1	SHOWER	SHOWER MODULE: AMERICAN STANDARD, SHOWER SYSTEM KIT W/ HAND SHOWER, MODEL 1662.221 [1662.223]	N/A	52"W X 37.5"D X 84"H	2.5 GPM SHOWER HEAD WITH PRESSURE-BALANCING MIXING VALVE HAVING A POINT OF 104°F; CERAMIC VALVE FOR VOLUME AND TEMP. CONTROL, ADJ. HOT LIMIT SS, ADJUSTABLE SINGLE LEVER HANDLE	1/2"	2" PVC P-TRAP	N/A	INTEGRAL CORROSION-RESISTANT METAL DRAIN WITH REMOVABLE STRAINER AND 2" BOTTOM OUTLET	SHOWER CONTROL VALVE - 48" ABOVE SHOWER FLOOR	1/2	1/2	2	2
WC-1	ADA WATER CLOSET	WATER CLOSET: AMERICAN STANDARD, WHITE MADERA MODEL 3043.001; FLUSH VALVE: SLOAN, MODEL ROYAL #113-1.28 ES-S TMO	BOTTOM OUTLET, FLOOR-MOUNTED, WHITE VITREOUS CHINA	BOWL 18.5" X 14" X 16.5"	EXPOSED FLUSH VALVE, TOP SPUD (1.28 GPF) - WALL-MOUNTED HARD-WIRED SENSOR FLUSH	1 1/2" SUPPLY WITH 1/2" ANGLE STOP	INTEGRAL	N/A	1 1/2" TOP SPUD, CHURCH 9500SSCT WHITE OPEN FRONT SEAT LESS COVER WITH SELF SUSTAINING CHECK HINGES, BOLTS AND CAPS.	RIM AT 16-1/2" AFF	1	N/A	4	2
HB-1	HOSE BIBB	HOSE BIBB WOODFORD MODEL: 19C-4	WALL MOUNTED	3/4"	ANTI-SIPHON, FREEZELESS, LEAD-FREE	3/4"	-	WALL MOUNTED	-	APPROXIMATELY 48" AFF	3/4	N/A	N/A	N/A
FD-1	FLOOR DRAIN	ZURN MODEL#: EZ1-6	SQUARE FLOOR DRAIN WITH NICKEL BRONZE STRAINER	N/A	COMBINATION INVERTIBLE MEMBRANE CLAMP AND ADJUSTABLE COLLAR WITH SEEPAGE SLOTS AND TOP ASSEMBLY.	N/A	ZSHIELD BARRIER TRAP SEAL, OUTLET WITH TRAP	N/A	COORDINATE OUTLET SIZE WITH PLANS. PROVIDE WITH 1/2 OR 3/4 GRATE AS REQUIRED FOR APPLICATION.	N/A	N/A	N/A	2	2

NOTES: 1. POINT OF USE OF THERMOSTATIC MIXING VALVES SHALL BE SUITABLE FOR THE FLOW RATES OF FIXTURE SERVED. IMPROPERLY SELECTED THERMOSTATIC MIXING VALVES MAY RESULT IN INSTABILITU OF MIXED FLOW TEMPERATURE. POINT OF USE THERMOSTATIC MIXING VALVES FOR WASHING PURPOSES SHALL HAVE FACTORY SET MIXED FLOW TEMPERATURE OF 110°F (UNLESS NOTED OTHERWISE ABOVE) AND SHALL CONFIRM TO ASSE 1017

PIPING MATERIAL APPLICATION SCHEDULE

SERVICE	LOCATION	SIZE RANGE	MATERIAL	STANDARD INSULATION MATERIAL	OTHER INSULATION MATERIAL OPTIONS	JACKETING	REMARKS
SOIL , WASTE	UNDERGROUND	UP TO 10 INCH	PIPE: SOLID-WALL PVC PIPE, PVC SOCKET FITTINGS, AND SOLVENT-CEMENTED JOINTS: ASTM D 2665, DRAIN, WASTE, AND VENT, SCHEDULE 40. FITTINGS: PVC SOCKET FITTINGS, ASTM D 2665, SOCKET TYPE, MADE TO ASTM D 3311 DRAIN, WASTE, AND VENT PATTERNS.	-	-	-	-
	ABOVE GROUND	UP TO 10 INCH	PIPE: HUBLESS CAST-IRON PIPE AND FITTINGS OR DWV COPPER PIPING WITH HUBLESS FITTINGS OR DWV COPPER PIPE WITH WROUGHT-COPPER DRAINAGE FITTINGS AND SOLDER JOINTS. FITTINGS: ALL HUBLESS CAST-IRON FITTINGS SHALL MEET THE REQUIREMENTS OF ASTM A-888 OR CISPI 301 AS APPLICABLE. COUPLINGS, BOTH AT HORIZONTAL AND VERTICAL JOINTS, SHALL BE CLAMPED AND RESTRAINED WHERE REQUIRED AND IN ACCORDANCE WITH CISPI 301. COPPER DWV TUBE SHALL MEET THE REQUIREMENTS OF ASTM B306.	-	-	-	-
VENT	UNDERGROUND	UP TO 4 INCH	PIPE: SOLID-WALL PVC PIPE, PVC SOCKET FITTINGS, AND SOLVENT-CEMENTED JOINTS: ASTM D 2665, DRAIN, WASTE, AND VENT, SCHEDULE 40. FITTINGS: PVC SOCKET FITTINGS, ASTM D 2665, SOCKET TYPE, MADE TO ASTM D 3311 DRAIN, WASTE, AND VENT PATTERNS.	-	-	-	-
	ABOVE GROUND	UP TO 4 INCH	GALVANIZED STEEL PIPE WITH MALLEABLE IRON FITTINGS OR SERVICE WEIGHT CAST-IRON SOIL PIPE WITH HUBLESS FITTINGS (ASTM A-888 OR CISPI 301), OR DWV COPPER PIPE WITH WROUGHT-COPPER DRAINAGE FITTINGS AN SOLDER JOINTS. COPPER PIPE SHALL MEET ASTM B306 REQUIREMENTS.	1.5" CELLULAR GLASS	FIBERGLASS	ASJ or ASJ+	1
CONDENSATE DRAIN	ABOVE GROUND	UP TO 4 INCH	PIPE: SOLID-WALL PVC PIPE, PVC SOCKET FITTINGS, AND SOLVENT-CEMENTED JOINTS: ASTM D 2665, DRAIN, WASTE, AND VENT, SCHEDULE 40. FITTINGS: PVC SOCKET FITTINGS, ASTM D 2665, SOCKET TYPE, MADE TO ASTM D 3311 DRAIN, WASTE, AND VENT PATTERNS. PIPE: SOFT COPPER TUBE, ASTM B 88, TYPE K (ASTM B 88M, TYPE A) FITTINGS: ASME 16.22 & ASTM B75/B75M, WROUGHT-COPPER, SOLDER-JOINT FITTINGS; AND BRAZED JOINTS.	1.5" CELLULAR GLASS	FIBERGLASS	IASJ or ASJ+	3
DOMESTIC WATER INDOOR	UNDERGROUND	UP TO 6 INCH	PIPE: SOFT COPPER TUBE, ASTM B 88, TYPE K (ASTM B 88M, TYPE A) FITTINGS: ASME 16.22 & ASTM B75/B75M, WROUGHT-COPPER, SOLDER-JOINT FITTINGS; AND BRAZED JOINTS.	-	-	-	-
	ABOVE GROUND	UP TO 6 INCH	PIPE: ASTM B88, TYPE L DRAWN TEMPER SEAMLESS COPPER TUBE. FITTINGS: ASME B16.22 WROUGHT COPPER OR ASME B16.18 CAST-COPPER ALLOY. FLANGES: ASME B16.24, CLASS 150 CAST BRONZE FLANGES WITH SOLDER-JOINT ENDS. UNIONS: ASME B16.18 CAST-COPPER ALLOY, HEXAGONAL STOCK BODY WITH BALL-AND-SOCKET JOINT, METAL-TO-METAL SEATING SURFACES, AND SOLDER JOINT AND/OR THREADED ENDS.	1.5 INDOORS CELLULAR GLASS 2" OUTDOORS CELLULAR GLASS	FIBERGLASS OR FLEXIBLE ELASTOMETRIC	ASJ or ASJ+ FOR FIBERGLASS.	2

REMARKS:

1. INSULATE PLUMBING VENTS WITHIN 6 FEET OF ROOF/WALL OUTLET.
2. INSULATE ALL DOMESTIC HOT WATER, HOT WATER RETURN, TEMPERED WATER, AND COLD WATER PIPING.
3. INSULATE CONDENSATE DRAINAGE PIPING. PROVIDE PROTECTIVE JACKETING WHERE PIPING SUBJECT TO DAMAGE.

JACKET MATERIALS:

ASJ or ASJ+	FACTORY APPLIED VAPOR RETARDER FOR FIBERGLASS PIPE INSULATION CONSISTING OF WHITE KRAFT PAPER, FIBERGLASS-REINFORCED DIAGONAL SCRIM WITH ALUMINUM-FOIL BACKING; COMPLYING WITH ASTM C 1136. ASJ+ INCLUDES ADDITIONAL OUTER LAYER OF CLEAR POLYMER FILM.
ALUM	ASTM B209, TEMPER H14, MINIMUM THICKNESS OF 0.016 INCH, WITH FACTORY-APPLIED POLYETHYLENE AND KRAFT PAPER MOISTURE BARRIER ON THE INSIDE SURFACE
GLASS	PLAIN-WEAVE GLASS CLOTH CONFORMING TO ASTM D579/, STYLE 141, WEIGHING NOT LESS THAN 7.23 OUNCES PER SQUARE YARD BEFORE SIZING. FACTORY APPLY CLOTH WHEREVER POSSIBLE.
PVC	PROVIDE 0.010 INCH THICK, FACTORY-PREMOLDED POLYVINYLCHLORIDE, PIPE-BARREL SHEETING VAPOR-BARRIER JACKETING THAT IS SELF-EXTINGUISHING, WITH HIGH-IMPACT STRENGTH AND MODERATE CHEMICAL RESISTANCE.

Appendix QQ

EGR Load List

Appendix QQ

EGR Load List

THIS DOCUMENT SHALL BE REVISED IN ITS ENTIRETY.ALL SHEETS OF THIS DOCUMENT ARE THE SAME REVISION LEVEL AS INDICATED.

REVISION HISTORY

REV	DESCRIPTION	DATE (YYYY-MM-DD)	APPROVED
-	GE EGR Preliminary Load List		

Notes

MLI	DESCRIPTION
-	
-	
-	
-	

SIMILAR TO: ---	FIRST MADE FOR: -----	IEC61355 NO: ---	MLI NO: -----
CREATED BY: K. Infante	APPROVED BY: K.Infante	DOCUMENT TYPE: Customer Drawing	REVISION: -
GE POWER	DOCUMENT TITLE: GE EGR LOAD LIST		
CREATION DATE: (YYYY-MM-DD) 2023-04-10	SHEET SIZE: B	DRAWING NO: GE EGR-KDI-1	SHEET: 1 of 3

GE ELECTRICAL LOAD LIST

DRAWING NUMBER	REV	DATE	DESCRIPTION	GE CLASS II (NON - CRITICAL NOT EXPORT CONTROLLED)
GE-EGR-KDI-1 (Sheet 2 of 3)	-	2023-04-10	GE EGR ELECTRICAL LOAD LIST	

S.No	Revision Status	Tag name	PID Drawing	System MLI	Hardware MLI	Description	Type	Rated Voltage		Phase	Frequency	Rated Power			Rated Speed (R.P.M)
								Voltage	Type			W/kW/kVA		HP	
1	-	23GQ-1	Barry 7F.04-200 EGR PID	EGR	EGRJ	Seal Air PUMP#1A Motor SPACE HEATER	Heater	240	VAC	1 PH+N	60 Hz	0.1	kW	0.13	---
2	-	23GQ-2	Barry 7F.04-200 EGR PID	EGR	EGRJ	Seal Air PUMP#1B Motor SPACE HEATER	Heater	240	VAC	1 PH+N	60 Hz	0.1	kW	0.13	---
3	-	GQ001	Barry 7F.04-200 EGR PID	EGR	EGRJ	Seal Air PUMP#1A MOTOR	Motor	480	VAC	3 PH	60 Hz	15	kW	20	1750
4	-	GQ002	Barry 7F.04-200 EGR PID	EGR	EGRJ	Seal Air PUMP#1B MOTOR	Motor	480	VAC	3 PH	60 Hz	15	kW	20	1750
5	-	23GQ-3	Barry 7F.04-200 EGR PID	EGR	CRE4	Seal Air PUMP#2A Motor SPACE HEATER	Heater	240	VAC	1 PH+N	60 Hz	0.1	kW	0.13	---
6	-	23GQ-4	Barry 7F.04-200 EGR PID	EGR	CRE4	Seal Air PUMP#@B Motor SPACE HEATER	Heater	240	VAC	1 PH+N	60 Hz	0.1	kW	0.13	---
7	-	GQ003	Barry 7F.04-200 EGR PID	EGR	CRE4	Seal Air PUMP#2A MOTOR	Motor	480	VAC	3 PH	60 Hz	15	kW	20	1750
8	-	GQ004	Barry 7F.04-200 EGR PID	EGR	CRE4	Seal Air PUMP#2B MOTOR	Motor	480	VAC	3 PH	60 Hz	15	kW	20	1750
9	-	23GQ-5	Barry 7F.04-200 EGR PID	EGR	CRE2	Seal Air PUMP#3A Motor SPACE HEATER	Heater	240	VAC	1 PH+N	60 Hz	0.1	kW	0.13	---
10	-	23GQ-6	Barry 7F.04-200 EGR PID	EGR	CRE2	Seal Air PUMP#3B Motor SPACE HEATER	Heater	240	VAC	1 PH+N	60 Hz	0.1	kW	0.13	---
11	-	GQ005	Barry 7F.04-200 EGR PID	EGR	CRE2	Seal Air PUMP#3A MOTOR	Motor	480	VAC	3 PH	60 Hz	15	kW	20	1750
12	-	GQ006	Barry 7F.04-200 EGR PID	EGR	CRE2	Seal Air PUMP#3B MOTOR	Motor	480	VAC	3 PH	60 Hz	15	kW	20	1750
13	-	23GQ-7	Barry 7F.04-200 EGR PID	EGR	EGR6	DCC Recirc Water PUMP#1 Motor SPACE HEATER	Heater	240	VAC	1 PH+N	60 Hz	0.1	kW	0.13	---
14	-	23GQ-8	Barry 7F.04-200 EGR PID	EGR	EGR6	DCC Recirc Water PUMP#2 Motor SPACE HEATER	Heater	240	VAC	1 PH+N	60 Hz	0.1	kW	0.13	---
15		23GQ-9	Barry 7F.04-200 EGR PID	EGR	EGR6	DCC Recirc Water PUMP#3 Motor SPACE HEATER	Heater	240	VAC	1 PH+N	60 Hz	0.1	kW	0.13	---
16	-	GQ007	Barry 7F.04-200 EGR PID	EGR	EGR6	DCC Recirc Water PUMP#1 MOTOR	Motor	480	VAC	3 PH	60 Hz	149.1	kW	200	1185
17	-	GQ008	Barry 7F.04-200 EGR PID	EGR	EGR6	DCC Recirc Water PUMP#2 MOTOR	Motor	480	VAC	3 PH	60 Hz	149.1	kW	200	1185
18	-	GQ009	Barry 7F.04-200 EGR PID	EGR	EGR6	DCC Recirc Water PUMP#3 MOTOR	Motor	480	VAC	3 PH	60 Hz	149.1	kW	200	1185
19	-	23GQ-10	Barry 7F.04-200 EGR PID	EGR	A5T1	DCC Blower#1 Motor SPACE HEATER	Heater	240	VAC	1 PH+N	60 Hz	0.1	kW	0.13	---
20	-	GQ0010	Barry 7F.04-200 EGR PID	EGR	A5T1	DCC Blower#1 MOTOR	Motor	4160	VAC	3 PH	60 Hz	1304.9	kW	1750	890

GE ELECTRICAL LOAD LIST

DRAWING NUMBER	REV	DATE	DESCRIPTION	GE CLASS II (NON - CRITICAL NOT EXPORT CONTROLLED
GE-EGR-KDI-1 (Sheet 3 of 3)	-	2023-04-10	GE EGR ELECTRICAL LOAD LIST	

S.No	Revision Status	Tag name	PID Drawing	System MLI	Hardware MLI	Description	Type	Rated Voltage		Phase	Frequency	Rated Power			Rated Speed (R.P.M)
								Voltage	Type			W/kW/kVA		HP	
21	-	VQ001	Barry 7F.04-200 EGR PID	EGR	**TBD**	DCC Blower#1 VFD	VFD	4160	VAC	3 PH	60 Hz	894	kVA	---	---
22	-	23QM-01	Barry 7F.04-200 EGR PID	EGR	CRE1	Carbon Capture Isolation Damper#1 Motor Heater	Heater	240	VAC	1 PH+N	60 Hz	0.1	kW	0.13	_
23	-	QM501	Barry 7F.04-200 EGR PID	EGR	CRE1	Carbon Capture Isolation Damper#1 Motor	Motor	480	VAC	3 PH	60 Hz	56	kW	75	1750
24	-	23QM-02	Barry 7F.04-200 EGR PID	EGR	**CRE1**	Carbon Capture Isolation Damper#2 Motor Heater	Heater	240	VAC	1 PH+N	60 Hz	0.1	kW	0.13	_
25	-	QM502	Barry 7F.04-200 EGR PID	EGR	**CRE1**	Carbon Capture Isolation Damper#2 Motor	Motor	480	VAC	3 PH	60 Hz	56	kW	75	1750
26	-	23QM-03	Barry 7F.04-200 EGR PID	EGR	**TBD**	HRSG Stack Isolation Damper#2 Motor Heater	Heater	240	VAC	1 PH+N	60 Hz	0.1	kW	0.13	_
27	-	QM503	Barry 7F.04-200 EGR PID	EGR	**TBD**	HRSG Stack Isolation Damper#2 Motor	Motor	480	VAC	3 PH	60 Hz	56	kW	75	1750
28	-	23QM-04	Barry 7F.04-200 EGR PID	EGR	**TBD**	Blower Suction Damper Motor Heater	Heater	240	VAC	1 PH+N	60 Hz	0.1	kW	0.13	_
29	-	QM504	Barry 7F.04-200 EGR PID	EGR	**TBD**	Blower Suction Damper Motor	Motor	480	VAC	3 PH	60 Hz	14.9	kW	20	1750
30		QM504	Barry 7F.04-200 EGR PID	EGR	EGR3	Blower Outlet Damper Motor Heater	Heater	240	VAC	1 PH+N	60 Hz	0.1	kW	0.13	_
31		QM504	Barry 7F.04-200 EGR PID		EGR3	Blower Outlet Damper Motor	Motor	480	VAC	3 PH	60 Hz	56	kW	75	1750
32	-	20FHE-1	Barry 7F.04-200 EGR PID	EGR	CRE4	SOLENOID: EGR INLET DAMPER	Solenoid	120	VDC	1 PH+N	60 Hz	.02	kW	0.03	---
33	-	20FHE-2	Barry 7F.04-200 EGR PID	EGR	CRE4	SOLENOID: GT Mixer INLET DAMPER	Solenoid	120	VDC	1 PH+N	60 Hz	.02	kW	0.03	---
34	-	23QM-05	Barry 7F.04-200 EGR PID	EGR	**TBD**	Blowdown Pump Heater	Heater	240	VAC	1 PH+N	60 Hz	0.1	kW	0.13	---
35	-	QM503	Barry 7F.04-200 EGR PID	EGR	**TBD**	Blowdown Pump Motor	Motor	480	VAC	3 PH	60 Hz	74.5	kW	100	1750
36	1	QM505	Barry 7F.04-200 EGR PID	EGR	EGR3	WESP PIC Purge Fan Motor	Motor	480	VAC	3 PH	60 Hz	2.2	kW	3	1750
37	1	23QM-06	Barry 7F.04-200 EGR PID	EGR	EGR3	WESP PIC Purge Fan Motor Heater	Heater	240	VAC	1 PH+N	60 Hz	0.1	kW	0	---
38	1	QM506	Barry 7F.04-200 EGR PID	EGR	EGR3	WESP Flush Pump Motor	Motor	480	VAC	3 PH	60 Hz	27.4	kW	37	1750
39	1	23QM-07	Barry 7F.04-200 EGR PID	EGR	EGR3	WESP Flush Pump Motor Heater	Heater	240	VAC	1 PH+N	60 Hz	0.1	kW	0	---
40	1		Barry 7F.04-200 EGR PID	EGR	EGR3	WESP PIC Electrode Input Power		480	VAC	3 PH	60 Hz	119	kW	159.58	---
41	1		Barry 7F.04-200 EGR PID	EGR	EGR3	WESP PIC Purge Heater	Heater	480	VAC	3 PH	60 Hz	12	kW	16	---

Appendix RR

EGR Equipment List

Note that the following EGR equipment list is per GT train, so site needs a total of 2x the quantities shown below.

KKS CODE	NAME	MLI	QTY	EST WEIGHT	SIZE
	Gas Turbine				
	GT Air Intake		1		
	INLET PLENUM SS	1612			
	AIR INTAKE HORIZONTAL INLET DUCT FOR SS	A040			
	AIR INTAKE SYSTEM STATIC FILTER FOR SS	A41EGR			
	INLET PLENUM SS	A041			
	INLET TRANSITION DUCT				
	Instrumentation	misc			
	Power Island Mechanical				
	HRSG exhaust gas analysis system		1		
MBR02AA001	EGR INLET DAMPER		1		168 x 168 in
MBR03AP002	SOLIDS BLOWDOWN PUMP		2	740 lb	8x10-15
MBR02AN001	EGR BLOWER FAN		1	58000 lb	
	EGR BLOWER VFD				
MBR02AA002	EGR BLOWER OUTLET DAMPER		1		
LAW02	EGR BLOWER SEAL AIR SKID			4000 lb	
MBR01AC001	EGR DCC COOLER		1		
	COLLECTION TANK		1		
	OVERFLOW TANK		1		
	EGR DCC Cooling Water Circulation Pump skid				
MBR03AP001	EGR COOLING WATER CENTRIFUGAL PUMP		3	5795 lb	102 x 27 x 56 in
	EGR DCC Cooling water piping and valves		1		
	EGR DCC Cooling Water sampling system				
MBR03C002	EGR DCC CW HEX		2	15120 lb	122 x 36 x 105 in
	PURGE STACK DUCT		1		
MBR02AA003	EGR OUTLET DAMPER		1		147 x 147 in
	EGR INTERCONNECT DUCT		1		
	EGR INTERCONNECT DUCT - EXPANSION JOINTS		1		
	EGR INLET MIXER TRANSITION DUCT				
LAW03AA005	PURGE STACK DAMPER		1		46 x 46 in
	Exhaust gas monitoring system	misc	1		
MBR02CF001	Exhaust gas flowmeter	0637	1		
	HRSG conventional build				
HNE01QM501	Stack Damper		1	12,000 lb	202 in Dia
MBR01AA002	Carbon capture tandem louver damper		1	26,000 lb	266 x 266 in
MBR01AA001	Carbon capture/EGR isolation damper		1	15,000 lb	192 x 219 in
LAW01	Combined seal air skid		1	10,000 lb	

Appendix SS

Gas Turbine Modifications

1 Gas Turbine Modifications 1
1.1 Summary of GT Modifications 1
1.1.1 Advanced Compressor - Gas Only 1
1.1.2 F-Class Gen-V Turbine Rotor 2
1.1.3 7F AGP Repair-to-Tech 2
1.1.4 DLN 2.6+ Gas Only Combustion System 2
1.1.5 7F Robust Exhaust Frame Upgrade 2
1.1.6 7FA Shaft HP Limit Increase 2
1.1.7 Aspirated Hazardous Gas Protection System 2
1.1.8 Triple Modular Redundant (TMR) Pressure Monitoring 2
1.1.9 Safety Shutoff Valve (SSOV) and Vent Valve (SSOVV) 3
1.1.10 Field Laser Scan - 3D Image 3
1.1.11 Site Survey 3
1.1.12 .05 Roof Upgrade and Ventilation Mod 3
1.1.13 Insulation Kit 3
1.1.14 Summary of Modifications to GT Control System 3

1 Gas Turbine Modifications

1.1 Summary of GT Modifications

1.1.1 Advanced Compressor - Gas Only

The upgrade to advanced compressor (also known as 7F.04-200) consists of retrofitting a 7FA.05 compressor, GEGP's most advanced high efficiency compressor technology, into 7FA.03 gas turbines with Advanced Gas Path hardware in order to provide significant improvements in output and heat rate, as well as enhancements in reliability and maintainability.

Implementation of the 7FA.05 compressor upgrade (aka advanced compressor upgrade or 7F.04-200) provides the following benefits:

- Increased efficiency (i.e. improved heat rate)
- Increased output
- Field replaceable compressor rotor blades
- Ability to perform wet compression
- Fast start capability
- Improved hot day performance

1.1.2 F-Class Gen-V Turbine Rotor

The modification treated herein consists of providing the latest F-Class turbine rotor technology.

1.1.3 7F AGP Repair-to-Tech

The 7F Advanced Gas Path (AGP) program utilizes 7F.04 Hot Gas Path (HGP) technology which incorporates cooling and sealing enhancements and advanced materials to allow efficient operation at increased firing temperatures. Together with the low D/P 2.6+ combustor and model-based controls architecture, the AGP upgrade delivers improved output and heat rate while increasing hardware inspection intervals and replacement lives; all while maintaining base load emissions levels.

1.1.4 DLN 2.6+ Gas Only Combustion System

The 7FA DLN 2.6+ Combustor is a common architecture across the 7FA.03, 7FA.04 and 7FA.05 gas turbine models. The combustor can deliver lower NO_x and equal CO emissions at guaranteed levels as compared with the DLN 2.6 system. It also provides improved Combustion Inspection (CI) intervals, higher ethane and H_2 tolerance, and improved flexibility with lower turndown levels with increased Modified Wobbe Index (MWI) range. This product will provide the following benefits:

- Lower NOx, same CO emissions than DLN 2.6
- Enable potential performance improvements (Output and Heat Rate) with Advanced Gas Path (AGP) hardware
- Improved turndown
- Better availability through longer combustion inspection and replacement intervals
- Improved fuel flexibility through expanded MWI range
- Higher tolerance for higher ethane and hydrogen content
- Steam injection capability
- Emulsion system capability

1.1.5 7F Robust Exhaust Frame Upgrade

GEGP is offering an upgraded Exhaust Frame which resets the life of the exhaust portion of the unit to as-new while providing the latest design improvements.

1.1.6 7FA Shaft HP Limit Increase

The 7FA shaft torque limit increase allows customers that are installing the 7FA Advanced Gas Path upgrade to realize the maximum output advantage across the entire ambient range of the gas turbine.

1.1.7 Aspirated Hazardous Gas Protection System

GEGP offers a solution to protect a gas turbine unit from hazardous gas leaks with a panel-mounted system with a Lower Explosive Limit (LEL) protection circuit that is tied into the controls logic.

1.1.8 Triple Modular Redundant (TMR) Pressure Monitoring

This modification will upgrade the existing pressure monitoring devices to a triple modular redundant (TMR) configuration in the turbine compartment.

1.1.9 Safety Shutoff Valve (SSOV) and Vent Valve (SSOVV)

The Safety Shut Off System is comprised of two separate valves, a Stop Valve (SSOV) and a Vent Valve (SSOVV). These valves are located outdoors upstream of the Fuel Gas Module (FG1). They stop and vent (to atmosphere) the fuel gas to the GT in the event of Fire Detection, Hazardous Gas Detection, and Emergency Stop activation.

1.1.10 Field Laser Scan - 3D Image

The purpose of a laser scan is to capture site data and develop accurate and detailed models of the as-built gas turbine and/or plant equipment. Laser scanning is a fast, accurate and automated technology to acquire 3D digital data for engineering and design evaluation.

1.1.11 Site Survey

A Site Survey is conducted by GEGP technical personnel, with the consequent preparation of a Site Survey report, useful to both GEGP and the equipment owner as a baseline from which to carry out modification and/or upgrade work.

1.1.12 .05 Roof Upgrade and Ventilation Mod

This upgrade is to provide a replacement turbine compartment roof, including the ventilation blower skid, for improved ventilation and control of compartment temperature.

1.1.13 Insulation Kit

This scope consists of insulation covering the heated piping systems within the gas turbine compartment.

1.1.14 Summary of Modifications to GT Control System

As part of this modification, the software will be modified and returned to the site to be installed and commissioned by a qualified Controls Field Engineer.

Appendix TT

Capital and O&M Cost Summary

Notes:

(1) Originally submitted to DOE on September 12, 2023
(2) Updated and resubmitted to DOE on February 5, 2024

Contents

Acronyms 2
Capital Cost Estimate 3
NETL DEFINITIONS 3
CAPITAL COST OF BASE NGCC 6
CAPITAL COST ESTIMATING PROCESS 6
CAPITAL COST BASIS ASSUMPTIONS 9
CAPITAL COST RESULTS 15
Maintenance Cost Estimate 17

Acronyms

BOP –	**Balance of Plant**
CapEx –	**Capital Expense**
CC –	**Combined Cycle**
CCS –	**Carbon Capture System**
CCW –	**Cooled Cooling Water**
CF –	**Capacity Factor**
CO_2 T&S –	**CO_2 Transportation and Storage**
CRH -	**Cold Reheat (Steam)**
CRV –	**Combined Reheat Valve (at Hot Reheat)**
CSCV –	**Combined Stop and Control Valve (at HP inlet)**
CW –	**Circulating (Cooling) Water**
DB –	**Duct Burner in HRSG to produce additional steam**
DCC –	**Direct Contact Cooler**
DLN –	**Dry Low NOx (combustor)**
EC –	**Gas Turbine inlet Evaporative Cooler**
EGR –	**Exhaust Gas Recirculation**
FEED –	**Front End Engineering Design**
FOC -	**Fixed Operating Costs**
GEGP –	**General Electric Gas Power**
GSU –	**Generator Step Up Transformer**
GT –	**Gas Turbine**
HHV –	**Higher Heating Value of fuel**
HMB -	**Heat and Mass Balance**
HP –	**High Pressure Steam Turbine section**
HPSH -	**High Pressure Superheater in HRSG**
HR –	**Heat Rate**
HRH –	**Hot Reheat (inlet to IP Steam Turbine section)**
HRSG –	**Heat Recovery Steam Generator**
IP –	**Intermediate Pressure Steam Turbine section**
IPSH -	**Intermediate Pressure Superheater in HRSG**
ISBL –	**Inside Battery Limits**
LCA –	**Life Cycle Analysis**
LCOE –	**Levelized Cost of Electricity ($/MW-hr)**
LHV –	**Lower Heating Value of fuel**
LP –	**Low Pressure Steam Turbine section**
LPSH -	**Low Pressure Superheater in HRSG**
MECL –	**Minimum Emissions Compliance Load on Gas Turbine**
MT –	**Metric Tonne (1000 kg)**
NGCC –	**Natural Gas Combined Cycle**
NPV –	**Net Present Value**
OpEx –	**Operating Expenses**
O&M –	**Operation and Maintenance**
OSBL –	**Outside Battery Limits**
PA (SIPA) –	**Power Augmentation to Gas Turbine with steam injection to combustor**
PCC -	**Post Combustion Capture**
P&ID -	**Piping and Instrumentation Diagram**
SCR –	**Selective Catalytic Reduction (in HRSG)**
SH –	**Superheater (HRSG)**
ST –	**Steam Turbine**
TEA –	**Techno-Economic Analysis**
VOC -	**Variable Operating Costs**
XO –	**Steam Turbine Crossover (at input to double flow LP section)**

Capital Cost Estimate

NETL DEFINITIONS

This assessment and report uses the DOE/NETL definitions available in their reports 'Cost and Performance Baseline for Fossil Energy Plants Volume 1: Bituminous Coal and Natural Cas to Electricity' report dated September 24, 2019 and 'Cost Estimation Methodology for NETL Assessments of Power Plant Performance' report dated February 2021. See Figures 1 thru 5.

The Bare Erected Cost (BEC) comprises the cost of process equipment, on-site facilities and infrastructure that support the plant (e.g., shops, offices, labs, road), and the direct and indirect labor required for its construction and/or installation. The cost of EPC services and contingencies are not included in BEC.

The Engineering, Procurement and Construction Cost (EPCC) comprises the BEC plus the cost of services provided by the EPC contractor. EPC services include: detailed design, contractor permitting (i.e., those permits that individual contractors must obtain to perform their scopes of work, as opposed to project permitting, which is not included here), and project/construction management costs.

The Total Plant Cost (TPC) comprises the EPCC plus project and process contingencies.

The Total Overnight Cost (TOC) comprises the TPC plus all other overnight costs, including owner's costs. TOC does not include escalation during construction or interest during construction.

The Total As-Spent Cost (TASC) is the sum of all capital expenditures as they are incurred during the capital expenditure period including their escalation. TASC also includes interest during construction, comprising interest on debt and a return on equity.

Figure 1: Definitions for CapEx from page 45 of NETL 'Cost and Performance Baseline for Fossil Energy Plants Volume 1: Bituminous Coal and Natural Cas to Electricity' report dated September 24, 2019'

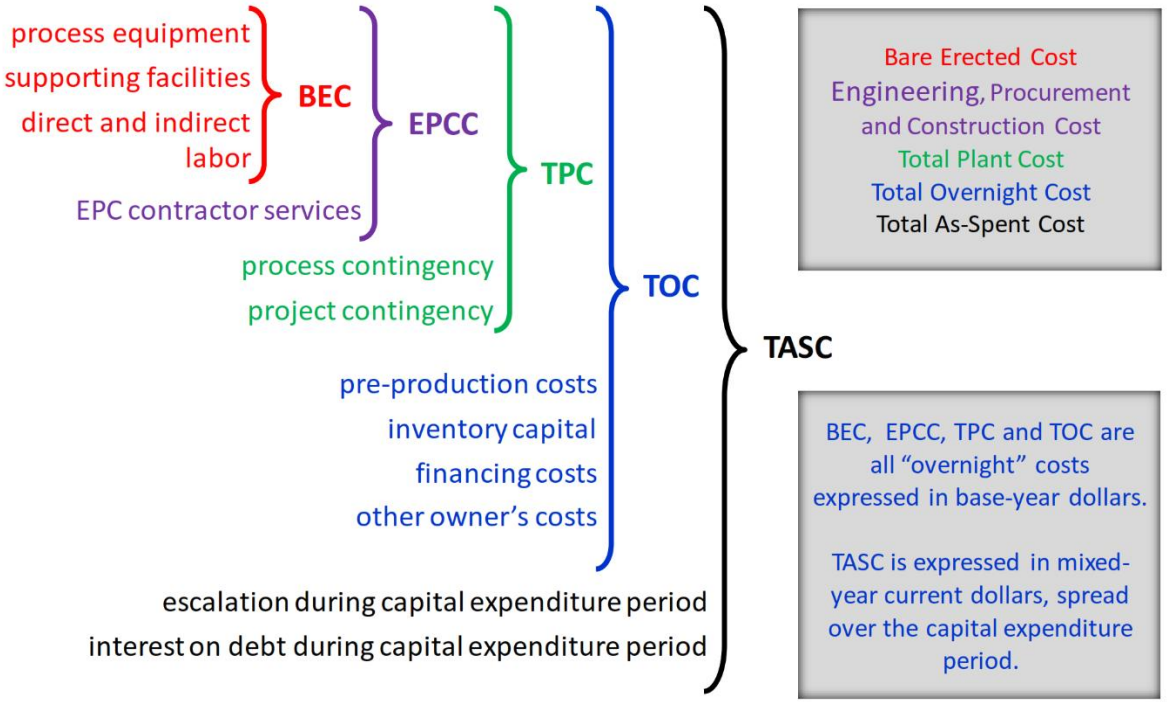

Figure 2: Capital Cost Levels and their Elements from page 10 of NETL 'Cost Estimation Methodology for NETL Assessments of Power Plant Performance' report dated February 2021

$$COE = \frac{\text{first year capital charge} + \text{first year fixed operating costs} + \text{first year variable operating costs}}{\text{annual net megawatt hours of power generated}}$$

$$COE = \frac{(FCR)(TASC) + OC_{FIX} + (CF)(OC_{VAR})}{(CF)(MWH)}$$

Figure 3: Calculation for Cost of Electricity from page 19 of NETL 'Cost Estimation Methodology for NETL Assessments of Power Plant Performance' report dated February 2021 (GE has used 0.0707 for FCR)

The breakeven CO_2 sales price represents the minimum CO_2 plant gate sales price that will incentivize carbon capture relative to a defined reference non-capture plant. The breakeven CO_2 sales price is calculated using the following formula:

$$Breakeven\ CO_2\ Sales\ Price\ (\frac{\$}{tonne}) = \frac{(LCOE_{CCS} - LCOE_{Non\ CCS})}{CO_2\ Captured}$$

Figure 4: Calculation for Breakeven CO2 Sales Price from page 52 of NETL 'Cost and Performance Baseline for Fossil Energy Plants Volume 1: Bituminous Coal and Natural Cas to Electricity' report dated September 24, 2019'

CapEx Total Plant Cost (TPC) includes:	**OpEx includes:**

• Process Equipment / Supporting Facilities / Direct & Indirect Labor for:
  ○ Feedwater & Misc. BOP Systems
  ○ CO2 Removal and Compression (inc. modifications to HRSG stacks)
  ○ Cooling System (water)
  ○ Accessory Electric Plant
  ○ Instrumentation & Controls
  ○ Improvements to Site
  ○ Buildings & Structures
  ○ IF APPLICABLE: EGR, aux boiler, non-condensing steam turbine, steam turbine modifications inc. butterfly valve
• EPC Contractor Services
• Process Contingencies
• Project Contingencies
	• Total Fixed Operating Costs
	• Maintenance Material Cost (100% Capacity Factor)
	• Consumables (100% Capacity Factor)

Figure 5: Summary of CapEx and OpEx components from NETL 'Cost and Performance Baseline for Fossil Energy Plants Volume 1: Bituminous Coal and Natural Cas to Electricity' report dated September 24, 2019'

CAPITAL COST OF BASE NGCC

The capital cost of the base NGCC must be estimated for use in the calculation of the LCOE in the TEA.

The following are the Capital Cost Estimates for the current NGCC (prior to modifications for or the addition of CCS). This is not the actual cost from 2001 for the construction of the Barry site, but is the projected cost of building a similar sized plant in December 2018.

Plant Size:	**551.869 MW**	
	Dec 2018$	**Nov 2023$**
Total Project Cost	**$432.0MM ($783/kW TPC)**	**$574.5MM ($1041/kW TPC)**
Total Overnight Cost	**$525.0MM ($951/kW TOC)**	**$698.3MM ($1265/kW TOC)**
Total As-Spent Cost	**$572.3MM ($1037/kW TASC)**	**$761.1MM ($1379/kW TASC)**

CAPITAL COST ESTIMATING PROCESS

The provided costs are based on the quantities developed throughout the FEED study by Kiewit, GE, and Linde. Quantities The provided costs are based on the quantities developed throughout the FEED study by Kiewit, GE, and Linde. Quantities include anything requiring installation or startup for the project as part of Kiewit Scope such as equipment, modules, steel, piping, foundations, instruments, and/or cable. Kiewit solicited vendor bids for select equipment. The remaining equipment costs were based on Kiewit's historical information. A summary of equipment and subcontract cost basis is below.

Kiewit applied unit rates to each quantity to calculate the required man-hours for that activity. Unit rates for each type of quantity bucket were developed using Kiewit's historically achieved rates. Similar scope activities from Kiewit projects with considerations of geographical area and labor type are all considered when developing the project specific labor productivity rates for each quantity bucket.

A wage rate is then applied to calculate the labor costs. Labor wages used in this estimate are union rates. The wages were checked and compared with prevailing wages to confirm they meet the current prevailing wages in the area for the applicable levels. These labor wages were then used along with the quantities and unit rates to determine the total installation and construction costs.

Bulk materials (structural steel, piping, cement, cable, etc.) are a composite of historical and "market basket" prices from vendor quotes that are periodically updated for estimate purposes.

Startup Costs are estimated by factoring from historical projects.

Indirect costs are determined from reviewing historical project information (by region, total craft manhours, total project duration, permanent material and equipment costs, and escalation during project duration). All historical costs used were escalated to current dollars.

Summary of Cost Basis for Engineered Equipment and Subcontracts

Description	Historical Pricing or Vendor Quote
Steam Turbine Modifications	Recent similar-to detailed Quotes
Gas Turbine Modifications	Current Pricing levels from GE database
HRSG modifications for GT mods	Recent similar-to detailed as built costs
Structured Packing Installation Subcontract	Historical Pricing
Flue Gas Dampers	Budgetary Vendor Quote
Ductwork	Budgetary Vendor Quote
Fire Protection Subcontract	Historical Pricing
Cooling Tower Subcontract	Budgetary Vendor Quote
Circulating Water Pumps	Budgetary Vendor Quote
General Service Pumps	Budgetary Vendor Quote
Cooling Tower Chemical Feed Equipment/Tanks	Historical Pricing
Instrument Air Compressor & Dryer	Historical Pricing
Instrument Air Receivers	Historical Pricing
Potable Water Tempering Skid	Historical Pricing
LP Steam Non-Return Valves & Gate Valves	Historical Pricing
Oil Water Separator	Historical Pricing
Main Power Transformers	Budgetary Vendor Quote (Email)
SUS Transformers	Historical Pricing
Electrical Enclosures	Budgetary Vendor Quote (Email)
UPS System	Historical Pricing
Substation (Breakers, Enclosure, Outdoor Eq.)	Historical Pricing
DCS	Historical Pricing
Instrumentation	Historical Pricing
Cable Bus	Historical Pricing
Construction Subcontracts (Piling etc)	Historical Pricing

Summary of Cost Development Division of Responsibility

	Design	Material Take-Offs	Material Supply Costs	Installation Costs
Base NGCC Modifications	GE	GE	GE	GE
Gas Turbine Modifications	GE	GE	GE	GE
EGR Area				
Duct	GE	GE	GE	Kiewit
Duct Support Steel	Kiewit	Kiewit	Kiewit	Kiewit
Mechanical Equipment	GE	GE	GE	Kiewit
Piping, Valves, Specialties	GE	GE	Kiewit	Kiewit
CT Inlet Filter House Modifications	GE	GE	GE	GE
Wire & Cable	Kiewit	Kiewit	Kiewit	Kiewit
Foundations	Kiewit	Kiewit	Kiewit	Kiewit
ISBL				
Duct	Linde	Kiewit	Kiewit	Kiewit
Support Steel	Linde	Linde	Kiewit	Kiewit
Mechanical Equipment	Linde	Linde	Linde	Kiewit
Piping, Valves, Specialties, Supports	Linde	Linde	Linde	Kiewit
Electrical Eq. PDC, Transformers	Linde	Linde	Linde	Kiewit
Wire & Cable	Linde	Linde	Linde	Kiewit
Foundations	Kiewit	Kiewit	Kiewit	Kiewit
OSBL				
All Equipment and Materials	Kiewit	Kiewit	Kiewit	Kiewit
Admin Building	Kiewit	Kiewit	Kiewit	Kiewit
PDCs & Substation, Main Power Transformer	Kiewit	Kiewit	Kiewit	Kiewit
Mechanical Equipment	Kiewit	Kiewit	Kiewit	Kiewit
Piping, Valves, Specialties, Supports	Kiewit	Kiewit	Kiewit	Kiewit
Duct from EGR(GE) to ISBL (Linde)	Kiewit	Kiewit	Kiewit	Kiewit

CAPITAL COST BASIS ASSUMPTIONS

Owner Responsibilities – The Owner shall be responsible for the following activities:

1. Owner furnished equipment (OFE) includes:
   a. All OFE is assumed to be fully shop assembled to the maximum extent possible. Estimate assumes all auxiliary systems come skidded to the maximum extent possible.
   b. All OFE will be provided in new and unused (clean) condition.
   c. TFA time for OFE will be sufficient for both construction support and start-up & performance testing.
   d. DDP Freight to the jobsite for heavy haul loads and all other materials.
   e. Engineering deliverables and equipment delivery for OFE in time to support the project schedule and sequence.
   f. Training, insurance, off-site storage (if necessary), etc. for all OFE. Contractor has included costs for temporary storage of structured packing (supplied by Linde).
   g. Start-up and operating spares for all OFE.
   h. Tie in from the 230kV Connection to the Main Power Transformer. Inclusive of cable, terminations, conduit, etc.
2. Engineering deliverables and data for Owner responsibilities (i.e. tie-in information etc.) in time to support the project schedule.
3. Ownership of the Site. The site is assumed to be of sufficient size to include the facility as well as laydown, Contractor's offices, and parking. The estimate does not include any costs associated with offsite laydown rental and material handling or offsite parking
4. All operating permits and other permits as required to begin construction and work on permanent structures.
5. Payment of the building permit, grading permit, plan review, habitat mitigation, city contributions, and other similar fees/funds.
6. Coordination and payment for all biologists, anthropologists, site specialists, etc.
7. Coordination and payment for all Owner's engineers, banks engineers, or others required for Owner's development purposes.
8. Coordination and payment for all utility related system studies.
9. Start-up and commissioning fuels, back-feed power, gases, temp construction power and all water associated with construction, start-up, and commissioning activities.
10. Coordination and supply of site utilities and interconnection to a location within 100 ft from the power block, and all construction-related utilities (power, water, sanitary sewage, etc.).
11. Off-site work such as repair of roads, bridges, rail unloading facilities, and gas and water pipelines.
12. Facility landscaping and irrigation.
13. Shop and lab equipment, furniture, computers and special equipment/tools.
14. First fills and subsequent usage of all chemicals, ammonia, bulk gases, and reagents.
15. Two (2) Operating Personnel to assist the Contractor's startup staff for duration of startup.
16. Permanent power supply to Main Power Transformer.

Contractor Responsibilities – The Contractor shall serve as the prime contractor and shall be responsible for the OSBL engineering, procurement, and construction of the facility as per the project Division of Responsibility. The Contractor shall be responsible for the following activities:

1. All construction related permits such as:
   a. Business and professional licenses, registrations and authorizations;
   b. Permits, certificates and approvals required for disposal of construction wastes;
   c. Permits and licenses required for transportation of Contractor furnished materials and equipment.

2. Detailed engineering of the facility as per the Division of Responsibility.
3. Procurement of the Contractor-furnished engineered equipment per the Kiewit equipment list.
4. Construction of the facility.
5. Start-up and commissioning of the facility.

Clarifications and Assumptions – The following list of assumptions and clarifications form the basis of the engineering estimate:

General

1. Estimate Basis: Indicative price with Firm Price to be developed at a later date and subject to agreement on commercial terms.
2. Union Labor Basis
3. EPC Construction Delivery Method
4. Currency Basis US$
5. Risk money for Contractor's EPC risks including liquidated damage rates, subcaps, caps, limit of liability, etc. has been included. The values and levels offered for these commercial limitations are based on current market conditions.
6. Builder's Risk Insurance, Payment and Performance Bonds, and Sales, Property and/or Provincial Taxes have not been included. A Parent Guarantee with a stepped Letter of Credit for a value up to 5% of the full final contract price has been included in lieu of retention.
7. Specific noise mitigation measures to achieve a far-field noise guarantee have not been included. The plant noise level is based on most equipment specified at 85 dBA at 3ft for near-field noise. Where equipment noise levels exceed 85 dBA, OSHA signage shall be posted.
8. The estimate does not include the remediation of asbestos, lead-based paint, or removal and mitigation of any contaminated soils or hazardous material.
9. EPC provided engineered equipment pricing is based on Contractor's choice of suppliers.
10. Proposal is based on equipment supplied being "manufacturer's standard".
11. Complete and accurate "as-built" drawings for the site will be available to Contractor for design prior to LNTP.
12. Kiewit's corporate blanket engineering E&O insurance coverage is included in the estimate. Additional coverages or a separate policy is not included.
13. The Facility is not considered to be "essential service," and will not be required to remain in operation or have immediate start-up capabilities in the event of a natural disaster such as earthquake, hurricane or flood.
14. Contractor will have full and unlimited site access at all times during the performance of the Scope of Work. This proposal does not include land rental for staging OFE, these items are to be brought to the site for an on-time delivery.
15. Plant design is based on Kiewit standards which are typical for Independent Power Producer's (IPP) projects.
16. Project shall be executed utilizing Kiewit's standards for document transmittal, scheduling, monthly reporting, etc.
17. All interfaces to existing facilities will be per the Kiewit Terminal Point List and based on the Owner drawings provided. Where no drawing was provided of the existing facility piping Kiewit has assumed double block and bleed isolation is available.
18. Warranty is assumed to be 12 months from Substantial Completion with an additional 12 months on any repairs. Overall duration of the warranty period shall not exceed 24 months from Substantial Completion.
19. Any EGR modifications to the Steam Turbine, Combustion Turbine, Combustion Turbine Air Intake, and HRSG gas path are by Others including supply of materials and installation. This

includes any new or modified support steel or foundations required for the Combustion Turbine Air Intake.

Budget Items

Escalation

The escalation necessary to complete the work over the project duration is included; however, no escalation is included to move the NTP date to some point further in the future. No cost or escalation for OFE has been included in the estimate.

Civil

1. The site (including laydown, parking, etc) is relatively flat. All underground obstructions are identified and located by the existing facility drawings and 3D model provided to Kiewit for use developing this estimate. The site is also free of artifacts, endangered species, restricted areas, voids, or other unusual site conditions. The estimate assumes no encroachment on site wetlands (if they exist), and there are no provisions included for any work within designated wetland areas.
2. The estimate includes cost for developing a 40 acre laydown, the area of which will be designated and provided by the owner.
3. No costs have been included for blasting or excavation of bedrock. Based on our review of the provided geotechnical information for the existing facility, it is assumed that bedrock is at a depth such that it will not be encountered during construction.
4. The estimate assumes structured dewatering during construction will be required. A point well system for dewatering is included and assumes a water discharge location to be defined by owner within a reasonable distance from area of dewatering.
5. All required roads and equipment access/maintenance areas are to be asphalt, surfacing of other areas within the Power Block limits shall be graveled.
6. Storm water is assumed to be sheet flow to sumps and inlets which will discharge to existing drainage ditches on site. No stormwater detention is included in pricing. No bioswales, stormceptor units or similar BMPs are included. No lift station or similar pumping for stormwater is included.
7. Owner shall be responsible for testing and disposal of any contaminated spoils encountered on site. All existing site soils are assumed to be non-contaminated.
8. Contractor has included cost for demolition of 30’ x 20’ storm vault structure as well as 210’ of storm drain pipe.
9. Contractor is not responsible for removal and/or excavation/re-compaction of undocumented fills encountered on site.
10. FEMA, USACE, and other civil permits that may be required shall be the responsibility of the Owner
11. No Traffic signals have been included.
12. Right of Entry / Land Owner coordination shall be the responsibility of the Owner.
13. Laydown areas will be left in a stoned condition at conclusion of construction. No costs have been included to reclaim/restore laydown areas or dispose of laydown stone/geofabric materials.

Structural

1. The estimate does not include costs for the Contractor to perform a Geotechnical Investigation of the proposed site to confirm the present assumptions of the site subsurface conditions. This investigation is assumed to be completed by the Owner and provided to Contractor prior to LNTP.

2. Deep foundations are included, however assumtptions will need to be validated with an updated geotechnical investigation. Shallow foundations are assumed to be suitable for lightly loaded foundations.
3. The estimate assumes a concrete batch plant is located reasonably close and no additional cost has been included to account for extended travel time to site.
4. An admin building and compressor canopies have been included, but no other buildings are assumed to be necessary.
5. Any required buildings may be pre-engineered metal buildings. Packaged enclosures may be provided in lieu of pre-engineered metal buildings for ancillary and electrical buildings and enclosures.
6. Fireproofing of structural steel is not included in the estimate.
7. All support steel, maintenance/access platforming, and auxiliary equipment required for the OFE packages shall be included by the OFE and is included within the provided quantities.
8. Structural steel shall utilize galvanized or inorganic zinc prime coated structural steel members.
9. No concrete coatings have been included.
10. Kiewit design and Kiewit developed quantities assume access requirements will be per Kiewit standard where Kiewit design.
11. Incomplete ISBL loading information was provided to Kiewit for foundation design. ISBL foundation design and quantities are dependent on Kiewit assumptions.
12. EGR duct support steel structure is based on bracing from the existing HRSG.

Mechanical

1. Pipe insulation materials are based on Kiewit's engineering standards.
2. Engineered equipment will be supplied as shop primed & finish painted with only field finish paint touchup being performed onsite, unless specified otherwise.
3. Painting of OFE will include touch-up painting of weld areas and the shop applied finish painted surfaces. All modules and access/support steel are assumed to come either finish painted or galvanized.
4. All pumps will be direct coupled, with no variable speed drives, or hydraulic couplings.
5. The estimate assumes the balance of OFE will be delivered by truck/barge to the project site. The following OFE components are anticipated to require special heavy haul loading/unloading: Absorbers, Quencher, Stripper Tower, and other carbon capture equipment. Kiewit has included pricing to offload equipment at the project site. Contractor has not allowed for costs associated with any rail permits, demurrage, site use fees, or any other associated rail-fees.
6. Contractor's standard means and methods of start-up/commissioning and related activities is included.
7. Regulated Metal Deposition (RMD) welding methods is acceptable where practical.
8. The flue gas ductwork material is carbon steel.
9. The estimate assumes that the internal parts of the adsorbers will be shop fabricated. No fabrication or supply of baseplates is included.
10. Estimate includes ductwork insulation for personnel protection only. This applies to all EGR, OSBL, and ISBL ductwork.
11. Contractor takes no risk from balancing the existing Steam Turbine or any turbine work associated with the existing steam tie in points.
12. Flue gas EGR duct installation estimate (duct from TP-028 & TP-029 to TP-03 & TP-04) assumes duct is delivered in prefabricated 40 foot sections of 15 ft. X 15 ft. carbon steel ductwork.
13. The EGR Direct Contact Cooler is estimated as being shop fabricated and transported to site in one fully assembled piece.
14. Estimate includes material supply and installation of 4000 ft of piping for the EGR system.
15. Relocation of existing equipment (identified in screenshot below) has been included.

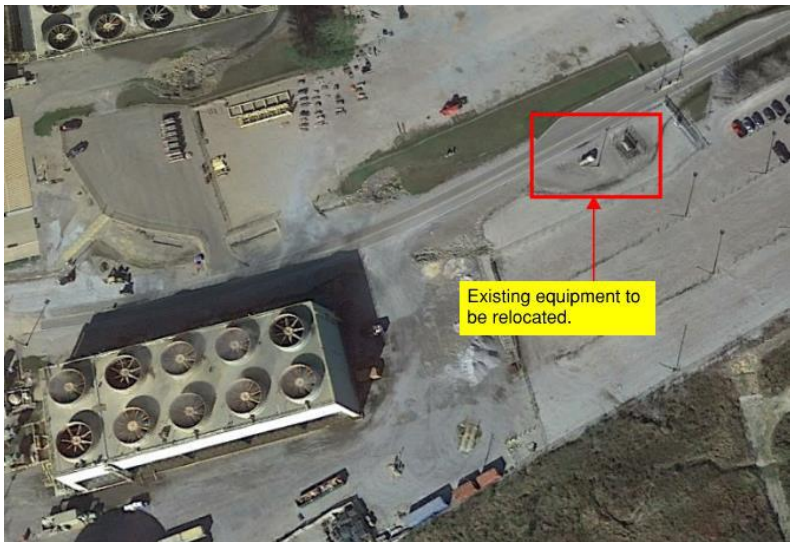

Electrical

1. The estimate is based on Contractor supplying cable typical for application on IPP power plants (i.e. PVC jacketed, fire retardant).
2. The estimate includes 1,450 circuits and 533 instruments for ISBL scope.
3. The estimate includes those studies and calculations required for the Contractor to procure the engineered plant equipment. System, grid, and transmission line studies are not included. Special considerations for grid voltage conditions and/or VAR flow requirements are not included.
4. All plant power and control cabling will be installed in a combination of underground duct bank, above ground cable trays and aboveground conduit. Armored cable may be installed above ground without any raceway.
5. Ground grid quantities provided were based on IEEE 80 grounding study in substation area and loops of major equipment in power block area where low and high resistance grounding is used. Site Fence grounding and grounding to remote areas outside the plant boundaries has not been included in the estimate. Mechanical connections are included in lieu of CAD welds.
6. The interface point for temporary construction power is assumed to be supplied at medium voltage (4.16kV, 6.9kV. or 13.8kV), 2,000 kVA. Cost for temporary power consumption has not been included.
7. No Emergency Diesel Generator has been included for site shutdown.
8. There are no lighting provisions to meet Dark Sky requirements.
9. Contractor will design the auxiliary electric system to limit the Incident Energy Level in accordance with IEEE 1584 methods and guidance. Meeting the incident level will be accomplished if necessary using one of the following methods, depending on the application:
    i. Maintenance switch scheme
    ii. Differential protection
    iii. Fiber-optic arc-flash detection scheme
    iv. Zone-selective interlocking scheme
    v. High-speed overcurrent protection
10. Arc-resistant equipment has not been included. All electrical gear will be per manufacturer's standards.
11. Permanent Arc-flash hazard analysis and signage is not included. Any arc-flash hazard analysis and signage prepared will be for use during construction and commissioning only prior to handover of the equipment.

12. Cable tray installed outdoors with multiple cables trays arranged in a stack configuration will have a cable tray covered on the top layer only. Cable trays installed under modular electrical enclosures will not be installed with cable tray covers.
13. The 480V system will be high resistance grounded.
14. Battery chargers shall be able to recharge the 125VDC battery system in 24 hours. Batteries and UPS shall be sized for two hours of operation.
15. Motors under ¾ horsepower shall be 120V, motors ¾ horsepower to 200 horsepower shall be 460V, and motors greater than 200 horsepower shall be medium voltage.
16. Medium voltage motors shall have 3-wire platinum or copper RTDs for the motor bearing temperature elements in lieu of thermocouples.
17. Aluminum cable tray shall be used. No fiberglass or galvanized steel trays have been included.
18. Cable and I/O tagging will be in accordance with the Contractor's standard scheme.
19. The interrupting short circuit rating of electrical equipment will be as required due to the system conditions.
20. Fiberglass risers and bends may be used in duct banks. Ductbank conduit shall be PVC. No galvanized steel conduit has been included.
21. Mineral insulated heat trace cable shall be used where required.
22. Contractor's standard means and methods of start-up/commissioning and related activities are included.
23. NERC CIP provisions are not included.
24. The use of Foundation Field Bus is not included.

Switchyard

1. Switchyard is not included.

Transmission

1. Transmission is not included.

Carbon Capture Equipment

1. The capture system is based on amine solvent capture process according to the Basis of Design and Linde provided deliverables and quantities.
2. The estimated maximum capture rate is approximately 6,000 tonnes/day.
3. Estimate is based on two trains, each with a single absorber. Equipment redundancy is provided as per the equipment list.
4. The absorber structure is estimated as a round steel design delivered to site in one piece.
5. The absorber/quencher/regenerator bed packing installation only has been carried in the estimate as a subcontract cost. Bed packing material supply and delivery to site is by Others.
6. Site specific air emission limits have not been reviewed by Kiewit.
7. Estimate includes material supply of ductwork between the absorber and quencher.
8. All piping inside of boundary limit for the Linde carbon capture process has been routed above ground.
9. The Linde inside of boundary limit pipe quantity basis of estimate is 53,200 linear feet.
10. All Linde process piping will be designed and purchased by Linde and installed by contractor.
11. Kiewit has assumed Linde will supply ISBL vessels, absorbers, direct contact coolers, stripper towers, and any other tanks as fully shop assembled and insulated, where required.

CAPITAL COST RESULTS

The following are the Capital Cost Estimates for:

1) Base Modifications required to existing Steam Turbine, HRSG, and BOP required to implement CCS of any kind
2) Exhaust Gas Recirculation (EGR) System to increase CCS inlet CO2 concentration and decrease flue gas total flow. This includes the required GT modifications to allow EGR (DLN 2.6+ Combustor, Compressor Material Upgrade and coatings, and GT controls system).
3) GT Modification to retain net NGCC/CCS net output and retain operational reliability.
4) CCS Core (ISBL) CO_2 Capture System (includes DCC, Absorber, Stripper and Reboiler)
5) CCS Core (ISBL) CO_2 Compression System (includes CO_2 Compressors, Dryers, and Intercoolers)
6) CCS BOP (OSBL) Cooling Water System (includes CCS Cooling Tower, Cooling Water Circulation Pumps and Heat Exchangers)
7) CCS BOP (OSBL) Electrical, Civil, Mechanical Interfaces to NGCC
8) Initial fill of CCS inventory (Solvent and Activated Carbon)

Total Project Cost ($MM)	**(1)**	**(2)**	**(3)**	**($)**	**(5)**	**(6)**	**(7)**	**(8)**	**TOTAL**
All Costs are shown in Dec 2018 ($US) All Costs are +30%/-20%	**Base Mods to Existing Plant**	**EGR System**	**GT Mods**	**CCS ISBL CO_2 Capture System**	**CCS ISBL CO_2 Compress System**	**CCS OWBL CW System**	**CCS OSBL Other Equipment**	**Initial Fill**	
Equipment	$18.01	$42.51	$38.33	$119.44	$43.41	$18.50	$29.33	$23.41	$332.9
Piping/Ducting	-	$7.27	-	$90.78	$26.26	$5.04	$19.82		$149.2
Foundations	-	$2.69	$1.18	$11.73	$3.81	$3.01	$11.81		$34.2
Civil/Structural	-	$8.36	$2.95	$52.02	$10.29	$5.81	$28.36		$107.8
Labor & Balance	$9.70	$5.50	$16.51	$73.81	$11.88	$6.23	$23.37		$147.0
Sub-Total TPC	$27.71	$66.33	$58.97	$347.79	$95.65	$38.59	$112.69	$23.41	$771.1
Contingency	$1.09	$7.31	$1.81	$69.42	$19.10	$7.70	$27.15		$133.6
Total Project Cost ($MM)	**$28.79**	**$73.64**	**$60.78**	**$417.21**	**$114.75**	**$46.28**	**$139.84**	**$23.41**	**$904.7**
Total Overnight Cost ($MM)									$1,099.7
Total As-Spent Cost ($MM)									**$1,198.6**

Design of the capture system is required to support a capital cost estimate consistent with AACE (Association of the Advancement of Cost Engineering) Class 3 with an expected accuracy range of -10% to -20% on the low side and +10% to +30% on the high side.
The actual cost estimate uncertainty was monitored from each of the major areas and combined into an overall uncertainty.

The resulting composite Capital Cost Uncertainty is +28.5% / -17.7% and is within the targeted +30/-20% range.

In Nov 2023 $(US) the same costs are:

Total Project Cost ($MM)	(1)	(2)	(3)	($)	(5)	(6)	(7)	(8)	TOTAL
All Costs are shown in Nov 2023 ($US) All Costs are +30%/-20%	Base Mods to Existing Plant	EGR System	GT Mods	CCS ISBL CO_2 Capture System	CCS ISBL CO_2 Compress System	CCS OWBL CW System	CCS OSBL Other Equipment	Initial Fill	
Equipment	$23.03	$41.58	$47.34	$169.19	$60.90	$27.18	$46.81	$29.94	$446.0
Piping/Ducting	-	$10.69	-	$133.39	$38.58	$7.40	$29.12		$219.2
Foundations	-	$3.95	$1.46	$17.24	$5.60	$4.43	$17.35		$50.0
Civil/Structural	-	$12.28	$3.64	$76.44	$15.11	$8.54	$41.67		$157.7
Labor & Balance	$12.40	$8.09	$20.39	$108.45	$17.46	$9.16	$34.33		$210.3
Sub-Total TPC	$35.43	$76.59	$72.83	$504.70	$137.65	$56.70	$169.28	$29.94	$1,083.1
Contingency	$1.39	$9.53	$2.23	$100.74	$27.49	$11.31	$39.75		$192.4
Total Project Cost ($MM)	**$36.82**	**$106.03**	**$75.06**	**$605.44**	**$165.14**	**$68.01**	**$209.03**	**$29.94**	**$1,295.5**
Total Overnight Cost ($MM)									$1,574.6
Total As-Spent Cost ($MM)									**$1,716.4**

Design of the capture system is required to support a capital cost estimate consistent with AACE (Association of the Advancement of Cost Engineering) Class 3 with an expected accuracy range of -10% to -20% on the low side and +10% to +30% on the high side.
The actual cost estimate uncertainty was monitored from each of the major areas and combined into an overall uncertainty.

The resulting composite Capital Cost Uncertainty is +28.7% / -18.0% and is within the targeted +30/-20% range.

Note that the Initial Fill values are based on:

1) 4022 tonnes @ 40% wt (1608.8 tonnes @ 100%) OASE Blue Solvent
2) $14.30/kg solvent cost in 2018$(US), $18.30/kg solvent cost in 2023$(US)
3) $400k (2018$ US)/$500k (2023$ US) for all other initial fills (324k gal Caustic Soda, 3402 tonnes Pot Ash (K_2CO_3), 176 kg Anti-Foam Agent, 182 tonnes Activated Carbon)

This space intentionally left blank

Maintenance Cost Estimate

Maintenance Cost is Summarized as Fixed Operating Cost (fixed regardless of number of hours operated) and Variable Operating Costs (costs that vary with number of hours operated). The FOC and VOC are shown for the base NGCC, for the CCS addition, and for the combined NGCC.CCS. Fixed Operating Costs shown do not include property taxes and insurance.

Variable Operating Costs assume 85% Capacity Factor (7,446 hrs/yr). NGCC FOC and VOC are representative and are not from actual plant.

Variable Cost for the CCS solvent is based on guaranteed levels from BASF, shown in the Linde &AE 1000 P-CU 1001 (EN) "Utility and Chemical Consumption" document of 490 tonne/yr, which translates to 0.3 kg of solvent (100% concentration) usage per 1 tonne of CO_2 captured.

All in Dec 2018 $MM(US)/yr (2023$ in [])	Unit Rates	NGCC	CCS Addition	NGCC/CCS
Fixed Operating Costs				
Annual Operating Labor	0.247 [0.271]	2.22 [2.44]	0.46 [0.51]	2.68 [2.95]
Maintenance Labor	0.164 [0.181]	3.28 [3.61]	2.30 [2.53]	5.58 [6.14]
Administrative & Support Labor	0.108 [0.118]	1.72 [1.89]	0.22 [0.24]	1.94 [2.13]
Total FOC	**0.160 [0.176]**	**7.22 [7.94]**	**2.98 [3.28]**	**10.20 [11.22]**
Variable Operating Costs				
Maintenance Material		4.90 [5.39] $1.18/MW-hr	8.14 [8.95] $4.99/tonne CO_2	13.04 [14.34]
Consumables				
Water		0.93 [1.02]	0.79 [0.87]	1.72 [1.89]
Makeup and Waste Water Treatment Chemicals		0.78 [0.86]	0.68 [0.75]	1.46 [1.61]
Ammonia		0.28 [0.31]	0.005 [0.006]	0.285 [0.316]
SCR Catalyst		0.11 [0.12]		0.11 [0.12]
CO_2 Capture System Chemicals	$14.30/kg [18.33]		7.00 [8.97]	7.00 [8.97]
Triethylene Glycol			0.83 [0.91]	0.83 [0.91]
Total Consumables		2.10 [2.31]	11.28 [12.41]	13.38 [14.72]
Waste Disposal				
SCR Catalyst		0.002		0.002
Triethylene Glycol			0.04	0.04
Amine Purification Unit Waste			0.07 [0.08]	0.07 [0.08]
Thermal Reclaimer Unit Waste			0.006 [0.007]	0.006 [0.007]
Total Waste Disposal		0.002	0.12 [0.13]	0.122 [0.132]
Total VOC		**7.00 [7.70]**	**19.54 [21.49]**	**26.54 [29.19]**
TOTAL O&M Costs		**14.22 [15.64]**	**22.52 [24.77]**	**36.74 [40.41]**

Appendix UU

Business Case Analysis

Notes:

(1) Originally submitted to DOE on November 7, 2023
(2) Updated and resubmitted to DOE on February 5, 2024

Contents

APPENDIX M – BUSINESS CASE ANALYSIS from FOA 2
1. Introduction 3
1.1. Purpose 3
1.2. Scope of the Review 4
2. Market size for NGCC + CCS 5
3. Proforma for NGCC + CCS 6
4. Cash Flow (1st year) 8
5. Technology Overview 9
6. Market Analysis 12
7. Future deployment projection 13
8. Potential Benefits of the technology 14

APPENDIX M – BUSINESS CASE ANALYSIS from FOA

The business case analysis demonstrates an understanding of the current and projected landscapes of the natural gas and industrial point sources of CO_2 and the potential utilization of tax credits including their projected revenue and duration.

The first section of the business case analysis should identify the potential market size of a technology option proposed by the applicant. An understanding will be developed of the end use markets in which coal-based products may compete. The analysis will contain a Business Case Analysis (BCA), technical overview; market analysis; future deployment projection; and quantification of potential benefits of the technology.

An outline of each of the five major pieces of the analysis are as follows:

Business Case Analysis

a. A pro forma which quantifies the projected financial parameters such as operating costs, operating revenues, financing cash flows, EBITDA, tax credits/liabilities, and ROI over the project lifespan. The Business Case Analysis should also include a list of key economic/financial assumptions.

Technical overview

b. Description of the technology and potential applicability across the natural gas and industrial point source sector area.

Market Analysis

a. Survey of natural gas and industrial point sources
b. Applicability of technology to these sources
c. Financial analysis of application of the technology to these sources
d. Discussion of potential financing structures and partnerships for deployment of the technology
e. Discussion of the potential utilization of tax credits and other incentives, including projected revenue and duration

Future deployment projection

a. Provide the potential deployment scale of the technology across the current and future natural gas and industrial point source sector
b. Identify and compare competing technology options
c. Discussion of potential barriers to large scale deployment

Quantify Potential Benefits of the technology

a. Provide estimates of the potential benefits of large-scale deployment in terms of metrics such as manufacturing jobs, revenue, emissions reductions, etc

1. Introduction

1.1. Purpose

GE Gas Power (GEGP), in connection with Linde, Kiewit Engineering, and Southern Company, are preparing a deliverable as a part of GEGP's ongoing Front End Engineering Design (FEED) Study "Retrofittable Advanced Combined Cycle Integration for Flexible Decarbonized Generation" awarded under Department of Energy's (DOE's) Funding Opportunity Announcement No.: DE-FOA-0002515.

GEGP, with partners, is planning for the installation of a carbon capture and sequestration (CCS) facility that will be integrated into an existing natural gas combined cycle (NGCC) unit at a power plant located in the Gulf Coast region, specifically Plant Barry, Block 6, in Bucks, Alabama. The NGCC unit will be modified with certain equipment upgrades to improve efficiency and to accommodate the integration of a CCS facility. The integrated NGCC/CCS facility will be designed under the FEED study.

The project will take place at the James M. Barry Electric Generating Plant.

A new carbon dioxide (CO_2) pipeline will also be built to transfer captured carbon to a sequestration facility located offsite.

GEGP was awarded the FEED study in February of 2022 and the FEED study is scheduled to be completed in December 2023, including this Business Case Analysis.

Natural gas power plants are essential in the energy transition in support of adding more renewable energy to the grid. Natural gas is still a producer of carbon emissions. GEGP is aiming to unlock ways to decarbonize gas-fired power plants. CCS is a tactic to capture CO_2 and trap it safely underground or reuse the gas in the making of other products. The project will explore ways to lower the cost of CCS while reducing CO_2 emissions from natural gas power plants by up to 95%. The DOE funding aims to further the goal of net-zero carbon emissions by 2050 and a 100% clean electricity sector by 2035. CCS is critical to curtailing greenhouse gas emissions from power plants to achieve net-zero goals.

1.2. Scope of the Review

This preliminary Business Case Analysis (BCA) demonstrates an understanding of the current and projected landscapes of both the Natural Gas Combined Cycle (NGCC) markets and the proposed site at Southern Company's Barry site located in Bucks, Alabama including the potential utilization of tax credits including their projected revenue and duration.

The Barry site consists of the following major components and has ample available land nearby for adding Carbon Capture and Sequestration (CCS): two GE 7FA gas turbines (GTs); two Vogt horizontal gas flow triple pressure reheat Heat Recovery Steam Generators with duct burners; and one GE D650 steam turbine. Makeup water is readily available at the site from the adjacent Mobile River. Proven advanced amine solvent (BASF OASE Blue), with a capture rate of 95%, will be provided by Linde CCS technology. To reduce the CCS cost, GE will provide an Exhaust Gas Recirculation (EGR) system which will elevate the Carbon Dioxide (CO_2) concentration at the CCS allowing the system to remove a higher percentage of CO_2 (6.7%vol with EGR vs 4.0%vol without EGR).

2. Market size for NGCC + CCS

The proposed solution should be applicable to any combined cycle plant including F class and H class GTs including both GE GTs as well as other manufacturers' GTs. Regarding the market analysis and future deployment projections, a survey of GE's installed GT base based on available space for CO_2 capture indicated that >300 GTs in the US can be opportunities for the proposed retrofit solution (see Figure 1).

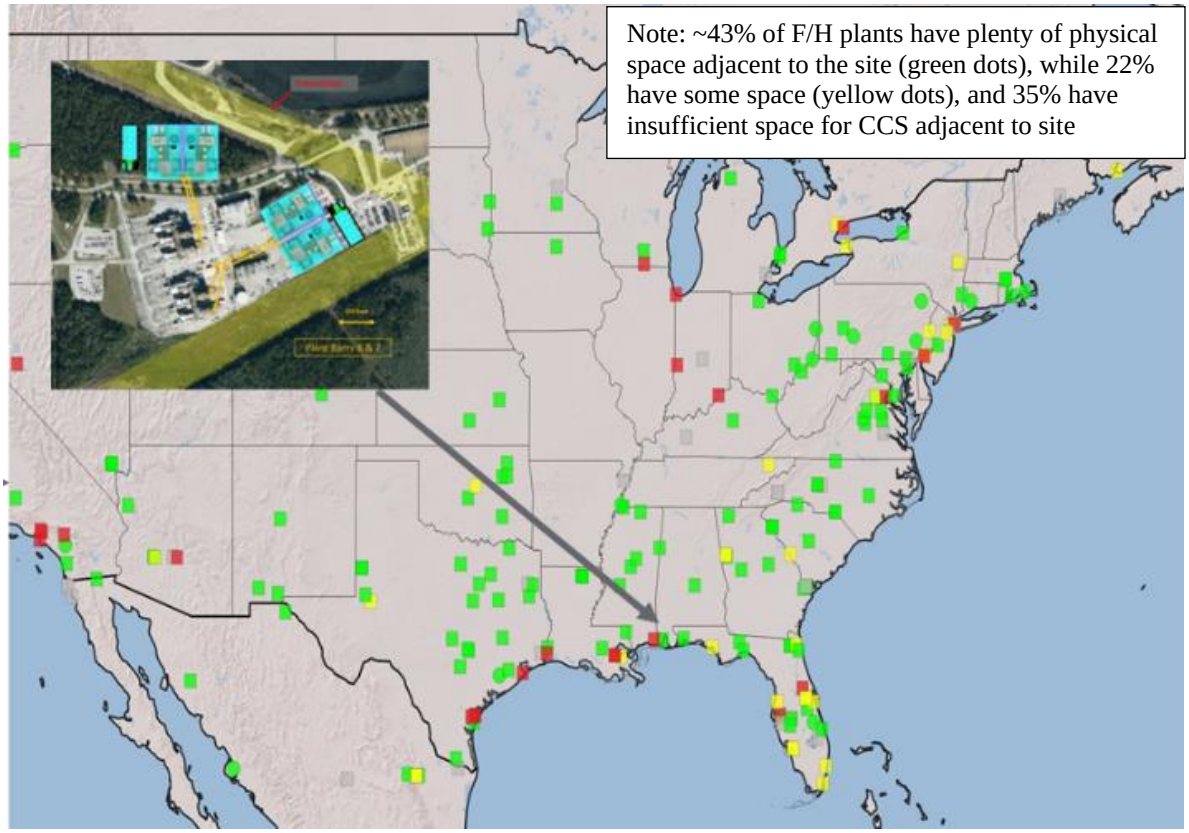

Figure 1: Preliminary Market Analysis and Future Deployment Projections of GE GTs

Also, implementation of CCS necessitates a large buildout of infrastructure to support carbon capture on gas-fired Electric Generating Units (EGUs) across the nation. Although the United States nationally has significant CO_2 storage potential, it varies significantly on a regional basis. Large numbers of existing EGUs (particularly in the mid-Atlantic and eastern Pennsylvania/Jersey/Maryland(PJM) region) are

significantly distant from sites where CO_2 can actually be sequestered. Therefore, the feasibility of CCS for existing EGUs varies by individual EGUs and regions.

3. Proforma for NGCC + CCS

Indicative CCS Capital Expenses (CapEx) (cost to add and integrate CCS into the existing facility) is provided as Total Plant Cost (TPC). Value for Operating Expenses (OpEx) represents the additional OpEx per year once CCS is added to the site.

Key Assumptions (1)	CCS
Operations	
Capacity (MW)	557
Heat Rate, HHV (Btu/kWh)	7,660
Capacity factor	85%
Generation (GWh/yr)	4.15
CO_2 captured @ 95% capture (MMT/yr)	1.6
Commodities	
Natural gas cost ($/MMBTU)	$4.5
Power price ($/MWh)	$39
Total capex ($MM)	**$1,322**
Total plant cost (escalated to 2024)	$1296
Development Cost	$26
Operating Income ($MM/year)	**$71**
Variable Operating and Maintenance Costs (VOM)	($3)
Fixed Operating and Maintenance Costs (FOM)	($20)
45Q tax-credit ($86.7/tonne @ 2027)	$158
Transportation & Storage fee ($10/tonne)	($18)
Make-whole payment	($22)
Project After Tax Internal Rate of Return (ATIRR) (unlevered)	**(2%)**
Project ATIRR with $270MM DOE cost share (unlevered)	**2%**

(1) Figures based on 12-year average of annual numbers escalated @ 2% per year

Figure 2: Estimated Proforma for Plant Barry

Key Assumptions

- Financial Investment Decision: 2024, Commercial Operation Date: 2027; term: 12-years
- Inflation factor: 2%

Key Assumptions (continued)

- Prices (at first year of operation):
  - Power price: $35/MWh
  - Fuel cost: $4.0/MMBTU
  - Variable Operations & Maintenance Cost: $12/tonne
  - Transportation & Storage Cost: $10/tonne
  - 45Q Tax Credit (Sequestration): $85/tonne (2026$)
  - Fixed Operations & Maintenance Costs: $3.0MM/year + 2% of TPC ($19.9MM/year for property tax & insurance)
  - Total Plant Cost: $905MM (2018$), $1296MM(2023$)
  - Development Cost: 2% of TPC (2024$)
- 85% Capacity Factor with no make-whole payment regarding dispatch

Based on these Proforma results, the CCS addition at Plant Barry could be feasible. However, financial feasibility requires several fundamental things to be true:

1) Alabama Public Service Commission (APSC) must conclude that decarbonization is in the best interest of the rate-payers of Alabama. This will likely follow from a new set of Greenhouse Gas emissions rules from the US EPA, Without this APSC directive, the Proforma rates of return would be ~1% lower, because in addition to the CCS CapEx, a rate payer rebate would be required. The make-whole payment listed in the Proforma is for the increased fuel cost driven by the CCS.
2) Some level of cost share (such as the $270MM listed in the Proforma) must be included to reduce the CapEx and increase the After Tax Internal Rate of Return.
3) Even with items 1) and 2) above, this project will only be financially feasible for “green” energy investors, that place inherent value in decarbonization.

4. Cash Flow (1st year)

The first year cash flow of the CCS versus the existing non-CCS plant is summarized below.

Key Assumptions (1)	Non-CCS	CCS
Operations		
Capacity (MW)	552	557
Heat Rate, HHV (Btu/kWh)	6,585	7,660
Capacity factor	85%	85%
Generation (GWh/yr)	4.11	4.15
CO_2 captured @ 95% capture (MMT/yr)	n/a	1.63
Commodities		
Natural gas cost ($/MMBTU)	$4	$4
Power price ($/MWh)	$35	$35
Total CCS Income ($MM)		
Added Power Sale		$1.30
45Q tax-credit ($85/tonne)		$138.55
Total (New) CCS Revenue ($2018)		**$139.85**
($2023) assuming 2%/yr escalation		**[$154.41]**
Total CCS Expenses ($MM/year)		
Variable Operating and Maintenance Costs (VOM)		($2.98)
Fixed Operating and Maintenance Costs (FOM)		($19.54)
Transportation & Storage fee ($10/tonne)		($16.30)
Added CCS Fuel Consumption		($18.82)
Total (New) CCS Expenses (excl CapEx) ($2018)		**($57.64)**
[($2023) assuming 2%/yr escalation]		**[($63.64)]**
NET CCS Revenue ($MM/year), excl CapEx ($2018)		**$82.21 $50.44/tonne CO_2**
[($2023) assuming 2%/yr excalation]		**[$90.77] [$55.69/tonne CO_2]**
CapEx ($2018), without Cost Share		**$1198.6**
Simple payback, yrs		**14.6 yrs**
CapEx ($2018), with $270MM Csot Share		**$928.6**
Simple payback, yrs		**11.3 yrs**
[CapEx ($2023), without Cost Share]		**[1716.4]**
[Simple payback, yrs]		**[18.9 yrs]**
[CapEx ($2023), with $270MM Csot Share]		**[$1446.4]**
[Simple payback, yrs]		**[15.9 yrs]**

Figure 3: Estimated 1st year cash flow for Plant Barry

5. Technology Overview

The Barry 6 plant is a 2x1 7FA Natural Gas Combined Cycle (NGCC) unit operated by Alabama Power, a subsidiary of Southern Company, in Bucks Alabama, just north of Mobile. Barry 6 was commissioned in 2001 and is a part of the larger James M. Barry Electric Generating Plant which includes a coal-fired unit (Barry 5) and a sister 2x1 7FA NGCC unit (Barry 7). A 2x1 NGCC is a Natural Gas Combined Cycle with 2 Gas Turbines, each with a Heat Recovery Steam Generator (HRSG) with the combined steam then directed to a single Steam Turbine (2x1 = 2 GTs x 1 ST).

The proposed "Retrofittable Advanced Combined Cycle Integration for Flexible Decarbonized Generation" upgrade will retrofit a 95% CO_2 capture to the existing plant. This technology can be similarly applied to any existing 7F Combined Cycle Power Plant in the US.

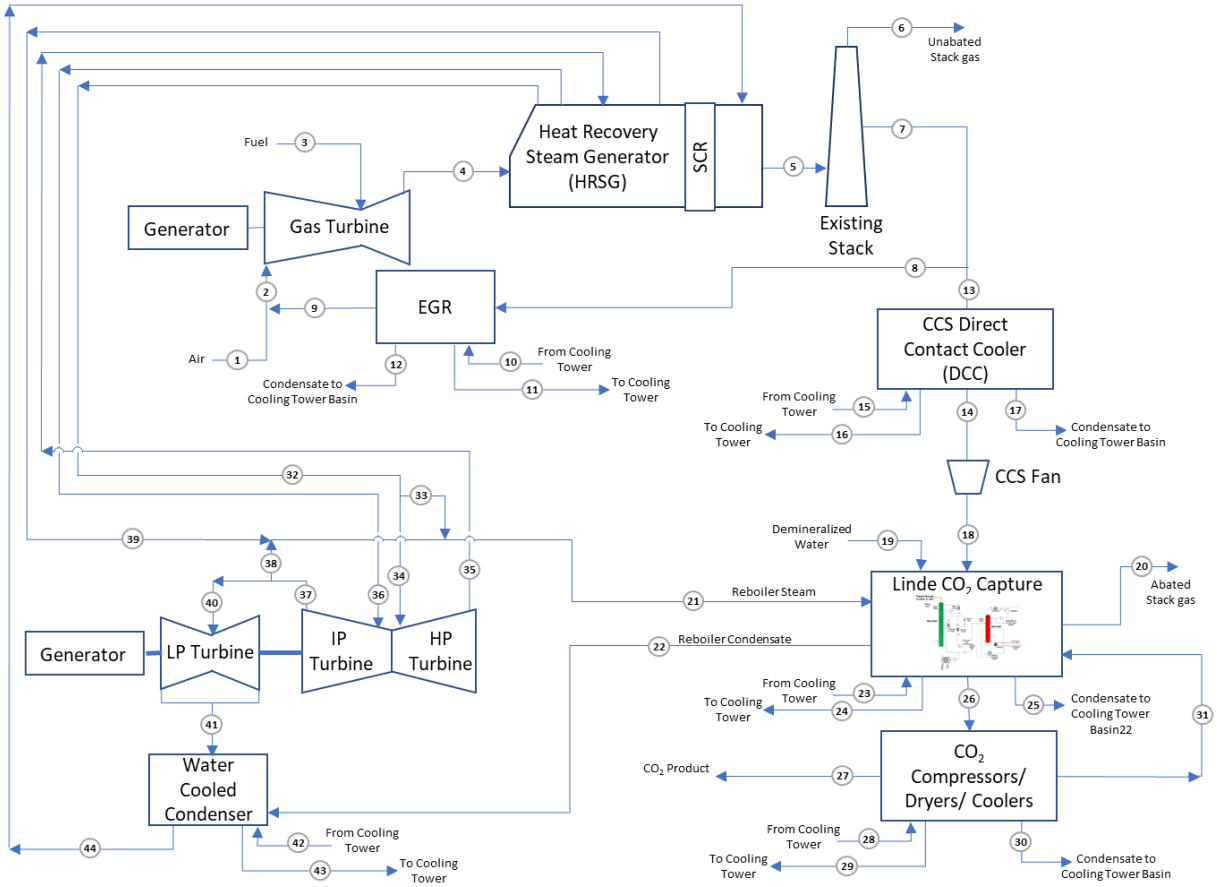

Figure 4: NGCC/CCS Process Block Diagram

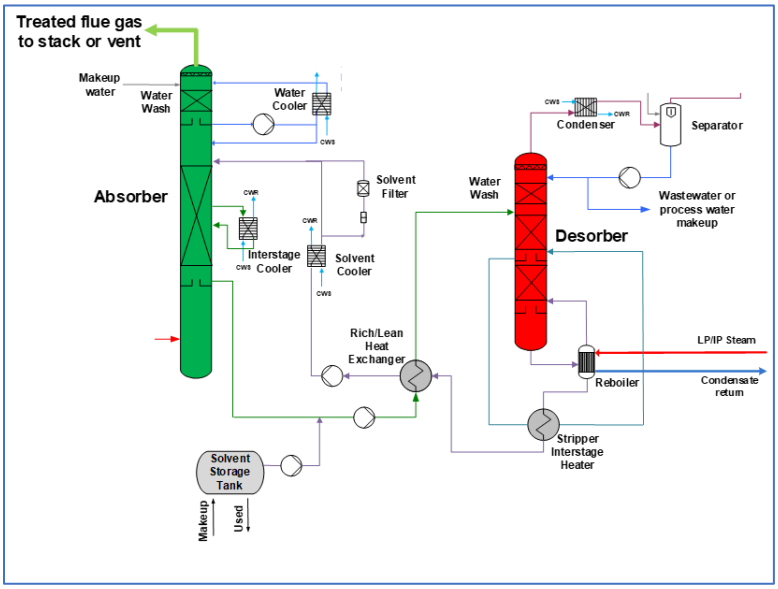

Figure 5: CCS Linde CO2 Capture Block

The Linde-BASF technology is based on a typical lean-rich solvent absorption/regeneration cycle for CO_2 capture but leverages several key innovative features for both solvent and process optimization.

Linde has achieved significant improvements in process design that further reduce the cost of CO_2 capture from NGCC plants. The Linde-BASF process and the process improvements that have been achieved during the development of the technology are outlined in Fig. 4. In addition to the benefits the OASE® blue solvent provides, the key Linde-BASF process features include: (1) high-capacity structured packing enabling a reduced absorber diameter and capital costs; (2) regeneration of CO_2 at elevated pressure (3.4 bara) allowing for lower downstream compression costs and compressor capital expenses; (3) novel solvent emissions control at top wash section of absorber using patented dry-bed configuration; (4) optimized heat transfer in rich/lean exchanger and heat recovery through use of the stripper interstage heater or lean vapor compression design options; (5) a fast-response reboiler design; and (6) a reduced solvent circulation rate.

Flue gas blower provides sufficient pressure to overcome pressure drop across DCC/prescrubber and absorber. The blower location is site-specific and for Plant Barry is located in the flue gas prior to the

direct contact cooler. The integrated direct contact cooler (DCC)/prescrubber cools the flue gas stream to ~35-40°C. The NaOH tank may not be required for SMR plant PCC because the flue gas does not contain SOx or has very low SOx levels.

In the absorber the water wash section at the top of the column reduces amine losses, even in the presence of aerosols. Dry bed configuration helps mitigate aerosol-driven amine losses. A gravity-driven interstage cooler for the absorber eliminates the need for a pump and related controls. High-capacity structured packing reduces the absorber diameter, thereby enabling a larger single train plant construction.

Between the absorber and the stripper the solvent-based heat exchanger recycles heat from the stripper lean solution to improve performance and reduce capital cost.

The stripper/desorber is pressures up to 3.4 bara which significantly reduces CO_2 compression energy and eliminates the bulky first stage of the CO_2 compressor. The plate and frame design of the reboiler reduces thermal degradation of solvent and provides for a lower solvent inventory and faster dynamics to respond to flue gas load & composition changes while the stripper inter-stage heater (SIH) enhances energy efficient CO_2 stripping from the solvent by recovering heat from the lean solvent to provide intermediate reboil, thereby reducing the energy consumption of solvent regeneration.

This CCS technology does have the potential to be applied to industrial point sources, but modifications may be required depending on the point source CO_2 concentrations and impurities and the availability of steam for the CCS reboiler.

This CCS technology is not limited to GE systems, however the application of the Exhaust Gas Recirculation (EGR) system will need to be done by the GT Original Equipment Manufacturer (OEM). Also, modifications may be required depending on the point source CO_2 concentrations and impurities and the availability of steam for the CCS reboiler.

6. Market Analysis

This technology can be similarly applied to any existing 7F Combined Cycle Power Plant in the US that has adequate space (43-65%, see Figure 1).

The recent Environmental Protection Agency's Proposed New Source Performance Standards call for Carbon Capture as a potential carbon mitigation plan for existing EGUs above 300 MW and 50% capacity factor. GE's analysis based on 2021 operating profiles using US Energy Information Administration (EIA) data indicates that 150 power plants representing over 130 GW of power and over 350 gas turbine EGUs would potentially need to comply with the EPA proposed rules (docket EPA-HQ-OAR-2023-0072). Approximately 1/3 of those units are located in areas with limited geology and would require significant pipeline infrastructure to support which is unlikely to support carbon capture adoption in the near term due to additional cost to the projects as well as difficulty in permitting of new pipeline.

Financing structures are expected to include a significant level of "green" private equity, targeted at decarbonization. As will any investment of this size the financing is expected to also include a significant amount of tax equity (30-40%). There are several examples of "green" private equity that are invested in power generation in the US, with much of that equity focused on renewable generation such as wind and solar. Many NGCC plants are owned and operated by these "green" investors, such as Constellation Energy Group, which is the nation's largest producer of carbon-free energy and sustainable solutions to millions of homes, institutional customers, the public sector, community aggregations and businesses, including three fourths of Fortune 100 companies. These investors place a tangible value on "green" energy and using CCS to generate decarbonized power is one of the technologies available to them.

Note that the Proforma shown earlier does not include any tax equity (i.e. it is unlevered). Any level of tax equity will increase the internal rate of return (IRR) above what is shown in the Proforma.

45Q tax credits are factored in the Proforma and are assumed to last for 12 years. Likewise the Proforma lifetime is assumed to be 12 years. Any operation and CO_2 credits after 12 years would increase the IRR of the Proforma.

7. Future deployment projection

The primary obstacle to deployment of CCS at the Barry site and for that matter most of the other potential sites in the US is lack of regulatory policy on CO_2 emissions. Until the Alabama Public Service Commission (APSC) concludes that decarbonization is in the best interest of the rate-payers of Alabama, Plant Barry will be required to receive both a capital offset and payment to assure 85% capacity factor (i.e. priority dispatch) on top of the MW make-right that is already factored into the Proforma. This is by far the single largest impediment to applying CCS at Plant Barry. Once the EPA requires decarbonization, APSC with follow suite and conclude that decarbonization is in the best interest of Alabama rate payers, and the rate payers will both participate in a modest cost-share towards the TPC of the CCS, and underwrite the priority dispatch of the plant, assuring high capacity factor that will make CCS cost-effective at Plant Barry. Until the APSC concludes that decarbonization is in the best interest of the rate-payers of Alabama, Plant Barry will be economically impractical. This is not a technical issue, but an issue of economics.

Deploying this technology into combined cycle units is a significant and important step toward the goal of a decarbonized, reliable power grid. Gas power with CCS is reliable, dispatchable, and available for long duration– three characteristics vital to any grid, especially as use of Variable Renewable Energy (VRE) increases. The importance of grid resiliency was illustrated recently at California Independent System Operator (CalISO) (2020) and Electric Reliability Council of Texas (ERCOT) (2021). The grid of the future will rely on gas power with CCS for dispatchable, cost-effective decarbonization.

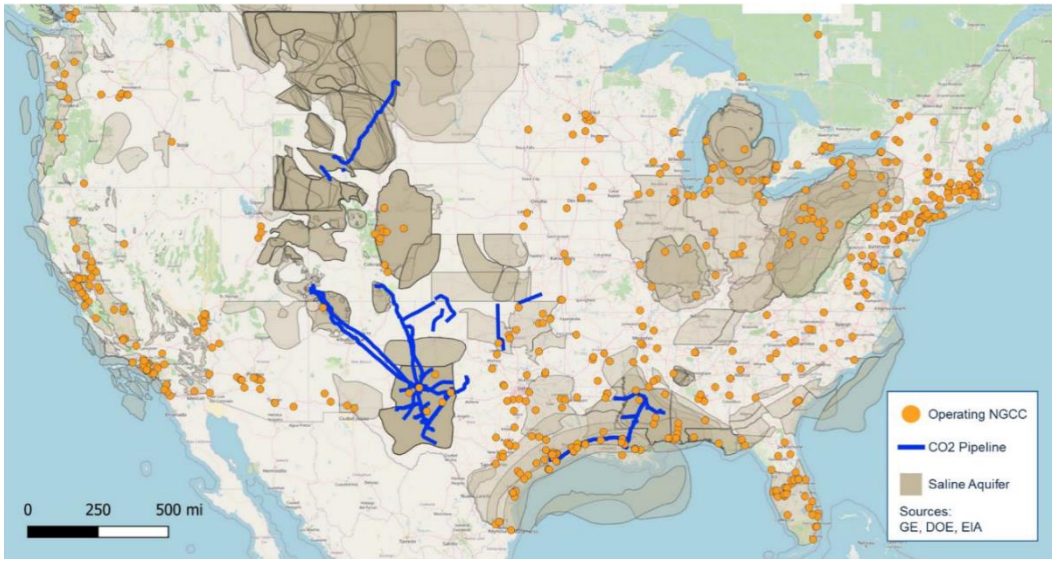

Figure 6: Existing CO_2 pipeline and Electrical Generation Units

For full implementation at an existing EGU, there are significant additional requirements that may or may not be readily available. These include: (a) space for installing a post-combustion carbon capture (PCCC) system, including space for additional cooling equipment; and (b) proximity to bulk CO_2 pipelines that provide access to either geology with good CO_2 storage characteristics or end-users that can utilize the CO_2 for industrial or other applications.

8. Potential Benefits of the technology

Successfully applying the retrofit to GEGP's US-based turbines would mean US jobs, contributing to a clean, reliable, cost-effective power generation sector for the nation. In addition, a successful outcome of GEGP's proposal can contribute to US technology leadership in this vital area. Preliminary analysis indicates that each retrofit opportunity can bring in ~3,400-5,000 project job-years (one-time per site design and construction of the plant) and ~10-15 operations job-years (ongoing year over year operations of the plant), in line with other public references (Larsen, John, & King, Ben & Hiltbrand, Galen & Herndon, Whitney. (2021). Capturing the Moment: Carbon Capture in the American Jobs Plan. Rhodium Group https://rhg.com/research/carbon-capture-american-jobs-plan/). The companies that lead in this space will have a competitive advantage that can lead to jobs and high-technology exports, while con-

tributing to the vitally important decarbonization of the global power generation sector. Additionally, this retrofit can provide customers with an attractive near-term improvement with low carbon footprint that would make their retrofitted units more effective with renewable load balancing. It is expected that the current emission levels for NOx, CO and particulate matter will be either maintained or improved after the proposed retrofit.

The potential benefits of large-scale deployment of this CCS would result in approximately 90 GW (2/3 of the 130 GW mentioned earlier in Market Size) or approximately 164 times the impact of Plant Barry alone. Additionally, there are new NGCC units being installed in the US at approximately 4-7 GW/yr through 2050, or approximately 7-13 times the impact of Plant Barry alone each year. Implementation of the first large-scale CCS application (and the first several) as also key to driving down the financial risk of applying CCS and the cost of purchasing and installing the CCS equipment.

Deploying this technology into combined cycle units is a significant and important step toward the goal of a decarbonized, reliable power grid. Gas power with CCS is reliable, dispatchable, and available for long duration– three characteristics vital to any grid, especially as use of Variable Renewable Energy (VRE) increases. The importance of grid resiliency was illustrated recently at Cal ISO (2020) and ERCOT (2021). The grid of the future will rely on gas power with CCS for dispatchable, cost-effective decarbonization.

Appendix VV

Life Cycle Analysis Report

Notes:

(1) Submitted to DOE on September 14, 2023

Executive Summary:

This life cycle analysis (LCA) is being commissioned for the United States (U.S.) Department of Energy (DOE) Office of Fossil Energy and Carbon Management (FECM) under the DOE funded program DE-FE-0032131. The Principal Investigators (PIs) for this project are John Sholes of GE Gas Power (GEGP), with support from Ramboll. The LCA has been conducted in conjunction with the Techno-Economic Analysis (TEA) developed under this program.

LCA is a hard science, and as such it should be caried out with rigorous methods, consistent boundary assumptions, and well-trained professionals to carry out the work. To this end GE Gas Power has elected to use Ramboll Americas Engineering Solutions and their team of Life Cycle Assessment Certified Professionals.

The scope of this study is to establish the cradle-to-delivered electricity life cycle impacts of the NGCC with CCS and NETs, namely, RNG. The study scope consists of two main cases: NGCC with 95% Capture; and NGCC with max (98%) Capture and RNG (22%, sourced from landfill gas [LFG]) to achieve net zero upstream and direct emissions from the fuel.

The LCA has concluded that the application of NGCC with CCS at 95% Capture will result in a reduction in specific CO_2 emissions (kg CO2 per MWhr) of 73.5%. The LCA has further concluded that achieving net zero upstream and direct emissions from the fuel will require the combination of maximum CCS Capture efficiency (98%) and the use of 22% RNG blended with 78% pipeline natural gas. Note that the design basis used for the detailed design and costing in the larger DE-FE0032131 FEED Study focused on the 95% Capture with a net 73.5% reduction in specific CO_2 emissions. It should be noted that this comparison is for benchmarking purposes only due to certain limitations of the equivalency of the two datasets, including that the system boundaries of this study are cradle-to-grave, while the NETL dataset is cradle-to-gate.

Prepared for

United States Department of Energy

Office of Fossil Energy and Carbon Management

Prepared by

Ramboll Americas Engineering Solutions, Inc.

Project Number

1690030899

Date

September 2023

LIFE CYCLE ANALYSIS OF AN INTEGRATED NGCC/CCS FACILITY

DOE FEED Study DE-FE0032131,

"Retrofittable Advanced Combined Cycle Integration for Flexible Decarbonized Generation"

Authors

John Sholes,*[1]

Abby Kirchofer, PhD, Life Cycle Assessment Certified Professional (LCACP),[2]

Ashley Kreuder, LCACP[2]

*Corresponding contact: john.sholes@ge.com

[1]GEGP

[2]Ramboll

CONTENTS

		Page
EXECUTIVE SUMMARY		**10**
1.	**GOAL AND SCOPE**	**17**
1.1	Study Goal	17
1.2	Study Scope	18
1.2.1	System Description	19
1.2.2	Functional Unit of the Study	20
1.2.3	System Boundary	20
1.2.4	Carbon Dioxide Source	22
1.2.5	Technology Representativeness	22
1.2.6	Geographical Representativeness	22
1.2.7	Temporal Representativeness	22
1.2.8	Life Cycle Impact Assessment Methods for Results Interpretation	23
1.2.9	Completeness Requirements	25
1.2.10	Sensitivity and Uncertainty Analysis	25
2.	**LIFE CYCLE INVENTORY ANALYSIS**	**28**
2.1	Modeling Platform	28
2.2	Proposed System and Unit Process Descriptions	28
2.3	Data Sources and Quality Assessment	31
2.4	Conversion Factors	33
2.5	Results of Inventory Completeness Check	34
2.6	Allocation Procedures	39
3.	**LIFE CYCLE IMPACT ASSESSMENT**	**40**
3.1	Data Quality Assessment	40

3.2 Life Cycle Impact Assessment Results 40

4. LIFE CYCLE INTERPRETATION 41

4.1 Results by Life Cycle Stage 42

4.2 Contribution Analysis 44

4.3 Results of Sensitivity Analysis 46

4.4 GWP Methods 49

4.5 Benchmarking 50

5. CONCLUSIONS 52

6. CRITICAL REVIEW 54

7. REFERENCES 55

APPENDICES

Appendix 1. LCIA Method Modifications

Appendix 2. Life Cycle Inventory

Appendix 3. RNG Calculations

Appendix 4. LCIA Results

TABLES

Table 1. Life cycle impact assessment indicators and characterization methods. 13

Table 2. Life cycle impact assessment indicators and characterization methods. 24

Table 3. IPCC AR4 and AR5 GWPs' 24

Table 4. Parameters included in the sensitivity analysis 25

Table 5. Emission factors of various RNG pathways, based on Rai et al. (2022). 26

Table 6. List of files associated with this report. 28

Table 7. Normal operating point assumptions of the two cases. 28

Table 8. Data quality assessment. 32

Table 9. Conversion factors and assumptions. 34

Table 10. Carbon balance for completeness check. 35

Table 11. Energy balance for completeness check. 37

Table 12. Water balance for completeness check. 38

Table 13. Cut-off analysis. 39

Table 14. LCIA results for both cases, with a reference flow of 1 MWh 40

Table 15. LCIA contribution analysis results. 97

FIGURES

Figure 1. Interpretation of "zero net carbon emissions" as net zero upstream and direct emissions from the fuel. 11

Figure 2. Simple system boundary diagram. 13

Figure 3. Contribution analysis for AR5: GWP-100 of the two cases, for a reference flow of 1 MWh. 15

Figure 4. Contribution analysis for WC of the two cases, for a reference flow of 1 MWh. 16

Figure 5. Interpretation of "zero net carbon emissions" as net zero upstream and direct emissions from the fuel. 18

Figure 6. System boundary diagram for the NGCC with CCS system. 21

Figure 7. Emission factor for RNG from LFG showing different categories of emissions. 42

Figure 8. Life cycle impact by life cycle stage for AR5: GWP-100 of both cases, for a reference flow of 1 MWh 43

Figure 9. Life cycle impact by life cycle stage for WC of both cases, for a reference flow of 1 MWh 44

Figure 10. Contribution analysis for AR5: GWP-100 of both cases, for a reference flow of 1 MWh. 45

Figure 11. Contribution analysis for WC of the NGCC with 95% CC and NGCC with 98% CC and RNG cases, for a reference flow of 1 MWh. 46

Figure 12. Sensitivity analysis results. 47

Figure 13. Sensitivity analysis of RNG input value. 48

Figure 14. Results for four distinct GWP impact assessment methods. 50

Figure 15. Results benchmarking 51

ACRONYMS AND ABBREVIATIONS

AD with AM	anaerobic digestion with animal manure
Btu	British thermal unit
CCS	Carbon capture and storage
CF	Capacity factor
CH_4	Methane
cm	Centimeter
CO_2	Carbon dioxide
CO_2e	Carbon dioxide equivalent
DOE	Department of Energy
EF	emission factor
EGR	Exhaust Gas Recirculation
EIA	Energy Information Administration
EIO	economic input-output
EPA	Environmental Protection Agency
FECM	Office of Fossil Energy and Carbon Management
FEED	Front-End Engineering Design
FNG	fossil natural gas
FOA	Funding Opportunity Announcement
GEGP	GE Gas Power
GHG	Greenhouse gas
GWP	global warming potential
h, hr	Hour
HFCs	hydrofluorocarbons
HRSG	heat recovery steam generator
IPCC	Intergovernmental Panel on Climate Change
ISO	International Organization for Standardization
kg	Kilogram
kW, kWe	Kilowatt electric
kWh	Kilowatt-hour
lb	Pound
L	liter
LCA	Life cycle analysis
LCIA	Life Cycle Impact Assessment
LFG	landfill gas
LHV	lower heating value
m	Meter
M	Thousand
m^3/min	Cubic meters per minute

Mcf	Thousand cubic feet
mD	Millidarcy
MM	Million
MMBtu	Metric Million British Thermal Unit
mol%	Mole percent
MPa	Megapascal
MSW	municipal solid waste
MW, MWe	Megawatt electric
MWh	Megawatt-hour
N/A	Not applicable/available
N_2	Nitrogen
N_2O	Nitrous oxide
NEMS	National Energy Modeling System
NET	negative emissions technologies
NETL	National Energy Technology Laboratory
NG	Natural gas
NGCC	Natural gas combined cycle
NOP	normal operating point
NOx	Oxides of nitrogen
O&M	Operation and maintenance
O_2	Oxygen
PC	Pulverized coal
PCC	post-combustion capture
PI	Principal Investigator
PSFM	Power Systems Financial Model
psia	Pound per square inch absolute
R&D	Research and development
RNG	renewable natural gas
SERC	Southeastern Electric Reliability Council
SESO	Southeastern Electric Reliability Council South
TEA	Techno-Economic Analysis
tonne	Metric ton (1,000 kg)
U.S.	United States
WC	water consumption

EXECUTIVE SUMMARY

This life cycle analysis (LCA) is being commissioned for the United States (U.S.) Department of Energy (DOE) Office of Fossil Energy and Carbon Management (FECM) under the DOE funded program DE-FE-0032131. The Principal Investigators (PIs) for this project are John Sholes of GE Gas Power (GEGP), with support from Ramboll. The LCA has been conducted in conjunction with the Techno-Economic Analysis (TEA) developed under this program.[1] The study has been prepared in accordance with the corresponding Funding Opportunity Announcement (FOA) Number DE-FOA-0002515, Amendment 000002[2] ("FOA"), the January 2022 version of the National Energy Technology Laboratory (NETL) Carbon Dioxide Utilization LCA Guidance ("NETL CO2U LCA Guidance Document"),[3] and the International Standards Organization (ISO) standards *ISO 14040 – Life cycle Assessment – Principles and framework*[4] and *ISO 14044 – Life cycle assessment – Requirements and guidelines*[5] ("ISO 14040/14044").

The proposed product system is a natural gas combined cycle (NGCC) unit retrofitted with carbon capture and proposed negative emissions technologies (NETs), namely, renewable natural gas (RNG). RNG coupled with carbon capture and storage (CCS) acts as a NET by uptaking biogenic CO_2 during the growth of plant matter and capturing and geologically sequestering the biogenic CO_2 permanently. The existing NGCC unit is part of the Alabama Power/Southern Company Barry Electric Generating Plant in Bucks, Alabama. NGCC Unit 6 will be upgraded to accommodate the carbon capture system, including the implementation of an Exhaust Gas Recirculation (EGR) System and modifications to the existing gas turbine to retain net power output and operational reliability. The carbon capture technology consists of amine solvent-based absorption. Captured carbon is assumed to be transported offsite via a pipeline for sequestration in a saline aquifer. Further detail regarding the system design can be found in other program documentation.

The goal of this LCA is to demonstrate robust accounting of full life cycle emissions and "zero net carbon emissions" of the proposed product system by calculating the life cycle greenhouse gas (GHG) emissions

and water consumption (cradle-to-delivered electricity) of producing electricity from the NGCC plant with carbon capture and storage ("NGCC with CCS") and proposed NETs. For the purposes of this study, "zero net carbon emissions" is interpreted as net zero upstream and direct emissions from the fuel. To reach net zero, the direct emissions not captured are assumed to have an effective CO_2e concentration equivalent to that of ambient air, i.e., a 99.4% reduction in direct emissions relative to the NGCC unit without carbon capture. This interpretation is illustrated in Figure 1.

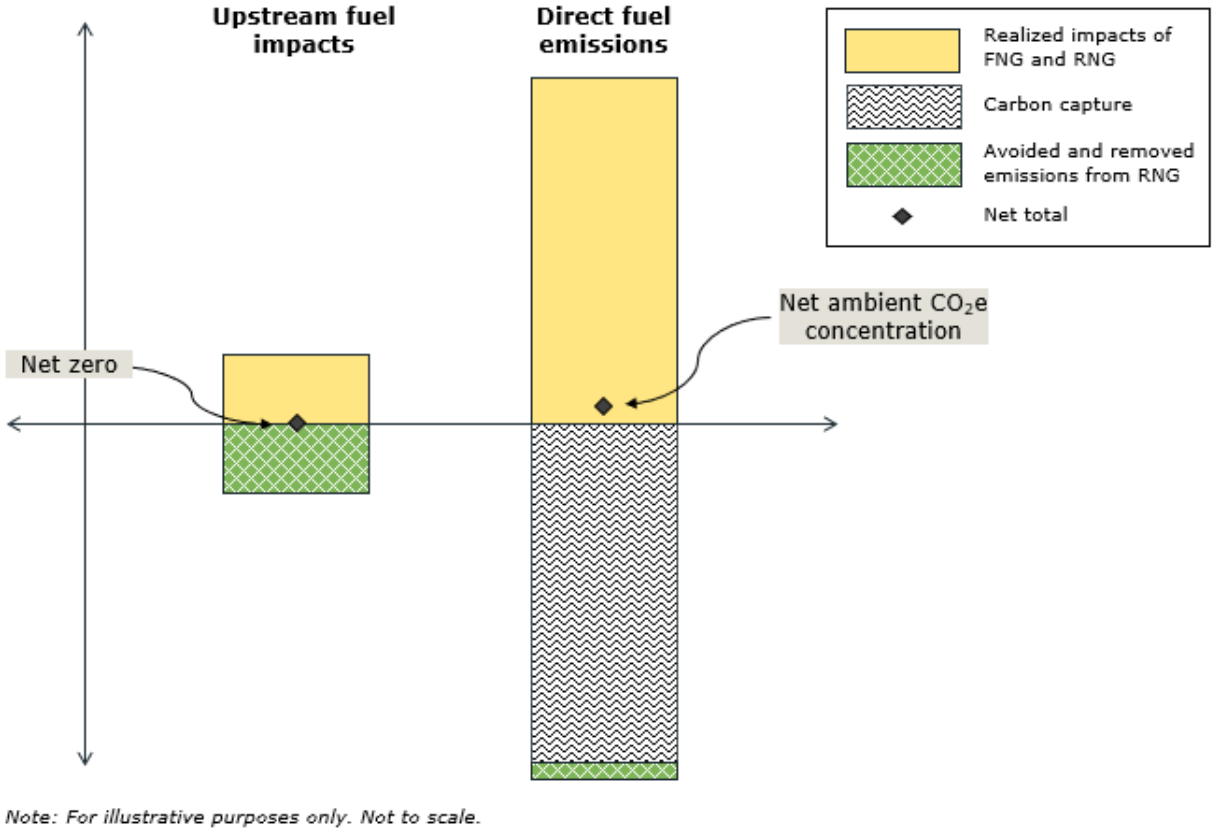

Figure 1. Interpretation of "zero net carbon emissions" as net zero upstream and direct emissions from the fuel.

The primary function of the NGCC with CCS system is to produce electricity supplied to the grid. The study scope consists of two main cases, defined as follows:

- **Case 1: NGCC with 95% Capture ("Case 1" or "NGCC with 95% CC")** – This case models the NGCC with CCS plant with 95% capture and 100% fossil natural gas (FNG). This Case 1 is the primary focus of the FEED Study with detailed design and costing done.
- **Case 2: NGCC with 98% Capture and RNG ("Case 2" or "NGCC with 98% CC and RNG") –** This case models the NGCC with CCS plant with 98% capture and approximately 78% FNG and 22% RNG to achieve net zero upstream fuel impacts and direct emissions. For this case, RNG is assumed to be sourced from landfill gas (LFG), which has an added benefit of avoided emissions from conventional landfill management practices. Increasing the capture rate to 98% requires an increase in capital equipment, as well as changes to key inputs such as amine and makeup cooling water consumption. The life cycle inventory and upstream impacts from fuel are changed accordingly. Case 2 is a part of the Techno-Economic Analysis sensitivity to reach a 99% reduction in CO_2 emissions. It did not contain the same detailed design and costing as Case 1, but that has very little impact on the accuracy of this LCA.

In accordance with the FOA, NETL CO2U LCA Guidance Document, and ISO 14040/14044, the scope of the study consists of the following:

- **Functional unit:** Production of baseload electricity delivered in the Southeastern Electric Reliability Council (SERC) South (SESO) power grid for 30 years, represented by the reference flow of 1 megawatt-hour (MWh) delivered to the customer.
- **System boundaries:** Cradle-to-delivered electricity (Figure 2 and Section 1.2.3). The upgraded NGCC unit with CCS will result in a net increase of power output relative to the original unit, and therefore no makeup electricity is included within the system boundary.

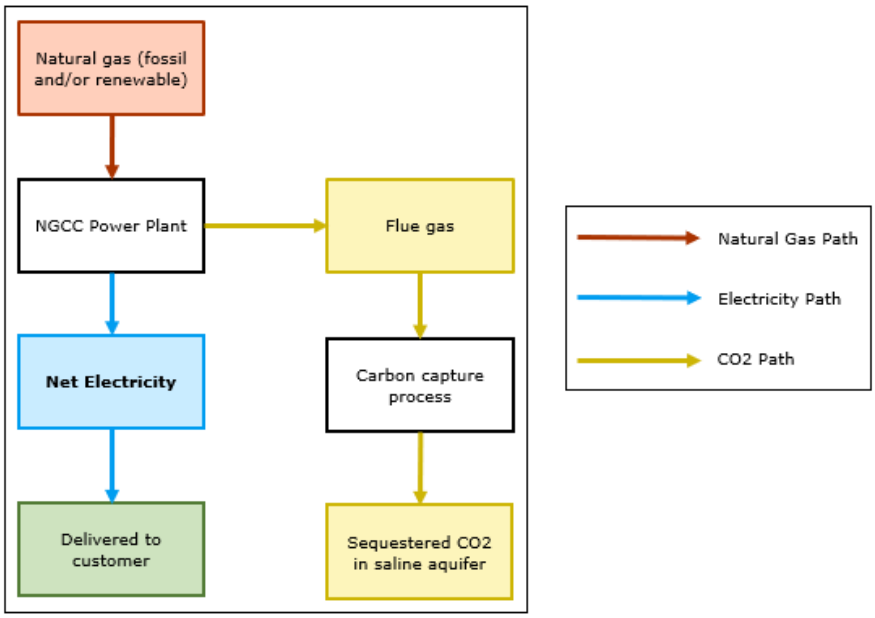

Figure 2. Simple system boundary diagram.

- **Impact categories:** As summarized in Table 1, global warming potential (GWP) (100-year and 20-year from the Intergovernmental Panel on Climate Change [IPCC] Assessment Reports 4 and 5) and water consumption (WC) impacts are evaluated. AR5: GWP-100 is the default GWP method used for reporting results in this report, with the results for the other GWP methods included in Section 4.4.

Table 1. Life cycle impact assessment indicators and characterization methods.

Impact Category	Abbreviation	Units	Characterization Model
GWP, based on IPCC AR4, 100-year time horizon; accounting for carbon climate feedback	AR4: GWP-100	kg CO_2e	TRACI 2.1 (2014),[6] with modifications of missing elementary flows
GWP, based on IPCC AR4, 20-year time horizon; accounting for carbon climate feedback	AR4: GWP-20	kg CO_2e	100-year model, with CO_2, CH_4, N_2O, and SF_6 modified to the 20-year GWP values detailed in Table 3

Impact Category	Abbreviation	Units	Characterization Model
GWP, based on IPCC AR5, 100-year time horizon; accounting for carbon climate feedback	AR5: GWP-100	kg CO_2e	TRACI 2.1 (NETL)[7], with modifications of missing elementary flows and an erroneous GWP for SF_6
GWP, based on IPCC AR5, 20-year time horizon; accounting for carbon climate feedback	AR5: GWP-20	kg CO_2e	100-year model, with CO_2, CH_4, N_2O, and SF_6 modified to the 20-year GWP values detailed in Table 3
Water consumption	WC	L	NETL, accessed via TRACI 2.1 (NETL)[10]

Overall, we find that the life cycle impacts of Case 1 are 118 kg CO_2e/MWh and 966 L water/MWh. With Case 2's increase in capture rate from 95% to 98% and inclusion of approximately 22% RNG, which has a net negative emission factor, the life cycle GWP impacts are much lower at 16.6 kg CO_2e/MWh. However, WC for Case 2 increases to 1,028 L/MWh. The inclusion of RNG to reach net zero upstream and direct emissions from the fuel results in an 86% decrease in life cycle emissions compared to Case 1. A higher percentage of RNG would achieve net zero emissions across the entire life cycle.

Figure 3 (AR5: GWP-100) and Figure 4 (WC) illustrate the key processes that are contributing to the impacts of the two cases. The main contributors (i.e., that make up 15% or more of the impact category) are as follows:

- The upstream production and delivery impacts of the FNG is a primary driver of the GWP results for Case 1 and Case 2.
- The upstream production and delivery impacts of the RNG is a primary driver of Case 2, offsetting all upstream production and delivery impacts for FNG and the remaining direct emissions to reach ambient CO_2 concentrations.

- Direct water consumption at the plant, including use of demineralized water and cooling water, are the primary drivers WC for both cases. Additionally, because natural gas extraction generates "produced water", i.e., discharges more water than it consumes, the WC for upstream FNG extraction, production, and delivery is negative.

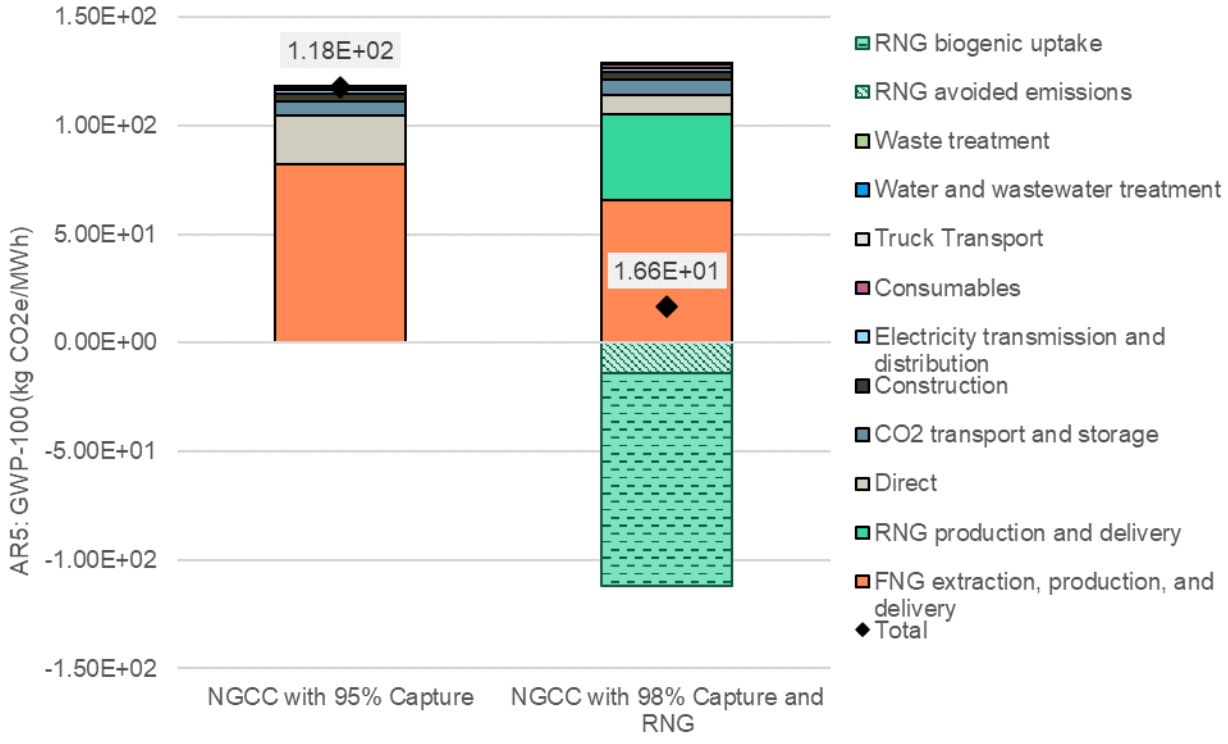

Figure 3. Contribution analysis for AR5: GWP-100 of the two cases, for a reference flow of 1 MWh.

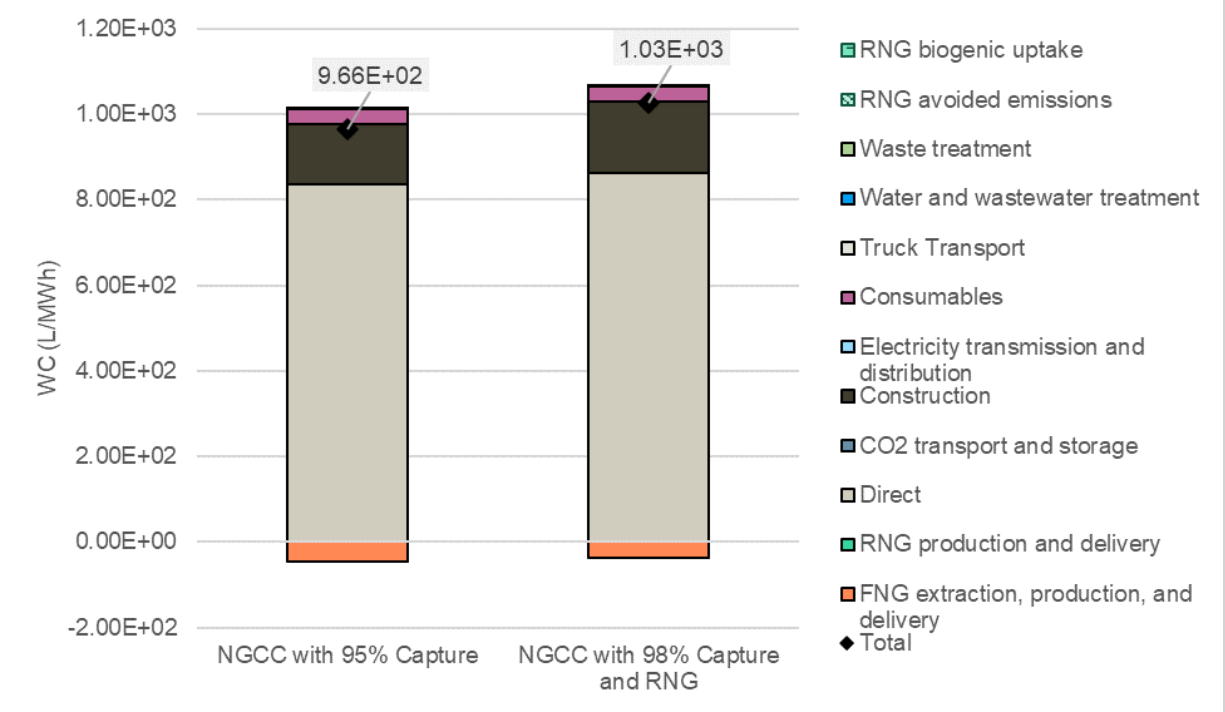

Figure 4. Contribution analysis for WC of the two cases, for a reference flow of 1 MWh.

Limitations related to results interpretation should be considered:

- The sensitivity analysis results indicated that the model is sensitive to key project parameters such as the capture rate and cooling water consumption. These parameters are not expected to vary significantly once the system design is finalized.
- The RNG EF could vary significantly depending on the actual market and technology/pathway development, and as such, the amount of RNG needed to achieve the same result of net zero direct emissions also varies. This is important because the amount of RNG impacts both the amount of carbon removed and the operational costs, as discussed in the TEA.
- The RNG environmental dataset does not include water consumption for production (only delivery), and therefore water consumption is potentially higher than what is presented here.

Overall, these limitations represent opportunities for further refinement in later iterations of this LCA.

1. GOAL AND SCOPE

1.1 Study Goal

The primary goal of the study is to conduct an LCA of the proposed NGCC with CCS plant and NETs.

The specific goals of this LCA are described below:

1. Intended application – The intended application of this LCA is to demonstrate robust accounting of full life cycle emissions of the proposed product system by calculating the life cycle GHG emissions and water consumption (cradle-to-delivered electricity) of producing electricity from the NGCC with CCS plant and proposed NETs.

2. Reasons for carrying out the study – To understand the environmental impact (measured as life cycle global warming potential [GWP] and water consumption) of the life cycle of the NGCC with CCS and NETs in accordance with requirements of DOE FOA No. DE-FOA-0002515, Amendment 000002, namely, "prepare a LCA in the format provided Appendix L to demonstrate robust accounting of full life cycle emissions" and "demonstrate zero net carbon emissions of the electricity delivered to the consumer..."[2] For the purposes of this study, "zero net carbon emissions" is interpreted as net zero upstream and direct emissions from the fuel. To reach net zero, the direct emissions not captured are assumed to have an effective CO_2e concentration equivalent to that of ambient air, i.e., a 99.4% reduction in direct emissions relative to the NGCC unit without carbon capture. This interpretation is illustrated in Figure 5.

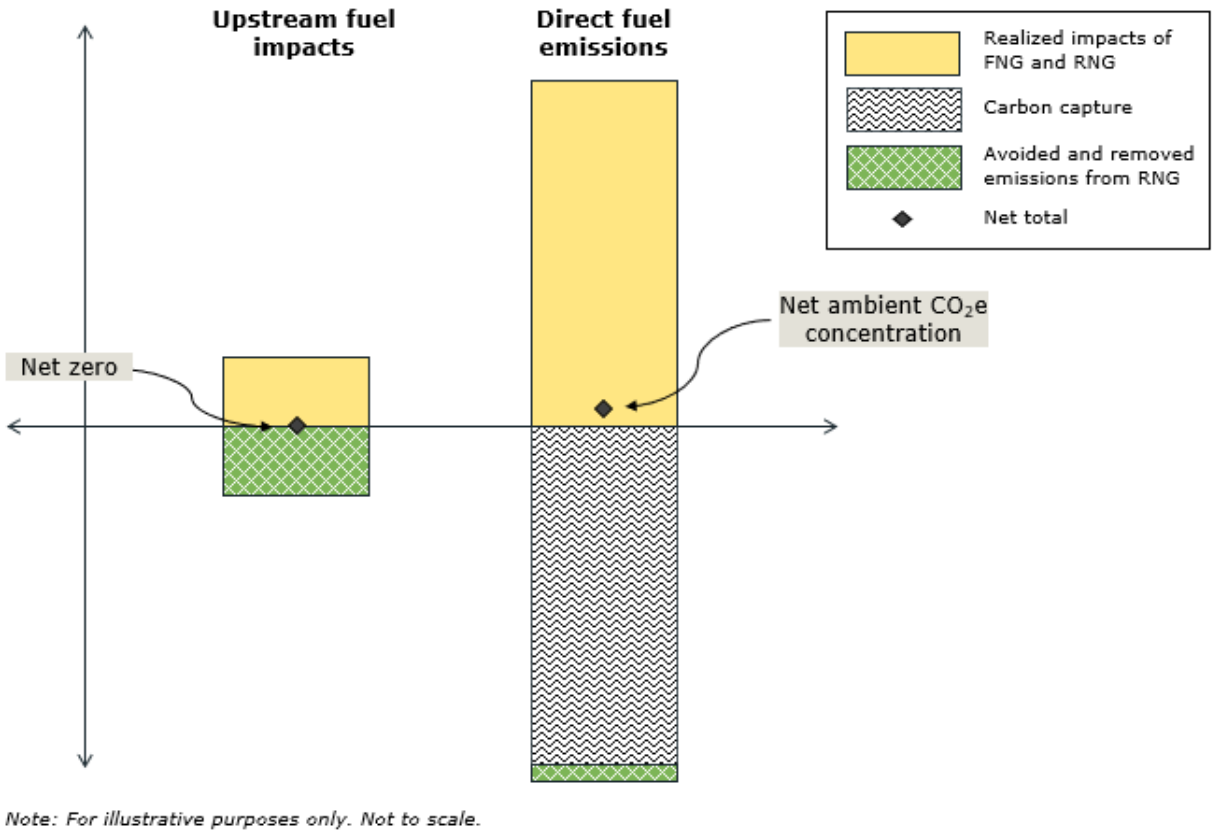

Figure 5. Interpretation of "zero net carbon emissions" as net zero upstream and direct emissions from the fuel.

3. Intended audience – The intended audience for the LCA described herein is the U.S. (DOE).

4. Public disclosure – The LCAs conducted as part of the U.S. DOE FOA requirement will become part of the public record for the award within the final scientific/technical report. This study does not support comparative assertions intended to be disclosed to the public.

1.2 Study Scope

The scope of this study is to establish the cradle-to-delivered electricity life cycle impacts of the NGCC with CCS and NETs, namely, RNG. The primary function of the NGCC with CCS system is to produce electricity supplied to the grid. The study scope consists of two main cases, as follows:

- **Case 1: NGCC with 95% Capture ("Case 1" or "NGCC with 95% CC") –** This case models the NGCC with CCS plant with 95% capture and 100% FNG.
- **Case 2: NGCC with 98% Capture and RNG ("Case 2" or "NGCC with 98% CC and RNG") –** This case models the NGCC with CCS plant with 98% capture and approximately 78% FNG and 22% RNG (sourced from landfill gas [LFG]) to achieve net zero upstream and direct emissions from the fuel.

1.2.1 System Description

The proposed product system is an NGCC unit retrofitted with carbon capture and proposed NETs, namely, RNG. The existing NGCC unit is part of the Alabama Power/Southern Company Barry Electric Generating Plant in Bucks, Alabama. NGCC Unit 6 will be upgraded to accommodate the carbon capture system, including the implementation of an EGR System and modifications to the gas turbine to retain net power output and operational reliability.

Natural gas is combusted in the combined cycle unit to generate steam and subsequently electricity that is supplied to the grid. The NGCC unit includes a heat recovery steam generator (HRSG) with selective catalytic reduction. Additionally, the EGR recirculates flue gas back into the gas turbine to decrease total flue gas flow and increase the inlet CO_2 concentration to the carbon capture system. Wet flue gas from the NGCC unit is directed to the post-combustion capture (PCC) plant, where the flue gas is pre-treated, CO_2 is absorbed using an amine solvent, and CO_2 is regenerated and compressed in multiple stages. Captured and compressed CO_2 is transported off-site via a pipeline and sequestered in a saline aquifer.

The system is modeled as two distinct cases, summarized below:

- Case 1 consists of a 95% capture rate with 100% FNG as the fuel source.
- Case 2 consists of increasing the capture rate to 98% and including some RNG in the fuel mix. RNG is considered a "drop in" fuel as it is considered equivalent to its fossil counterpart.8 RNG coupled with CCS acts as a NET by taking up biogenic CO2 during the growth of plant matter

and capturing and geologically sequestering the biogenic CO2 permanently. For this case, RNG is assumed to be sourced from LFG, which has an added benefit of avoided emissions from conventional landfill management practices. Additionally, increasing the capture rate to 98% requires an increase in capital equipment, as well as changes to key inputs such as amine and makeup cooling water consumption. The life cycle inventory and upstream impacts from fuel are changed accordingly.

1.2.2 Functional Unit of the Study

The functional unit of the study is the production of baseload electricity delivered in the SERC South (SESO) power grid for 30 years, represented by the reference flow of 1 megawatt-hour (MWh) of electricity delivered to the customer. This functional unit was chosen based on FOA requirements that the results be reported as kilograms of carbon dioxide equivalents per MWh (kg CO_2e/MWh).

1.2.3 System Boundary

As illustrated in Figure 6, the system boundary of the NGCC with CCS system covers cradle-to-delivered electricity. The life cycle stages consist of construction; raw material extraction, processing, and transport of fuels and other consumables; electricity production; CO_2 capture, transport, and storage; and generation of several air, water, and solid waste streams for the two main cases. Construction of the existing NGCC plant, NGCC upgrade, PCC plant, and CO_2 pipeline are included. The construction of proposed NETs is excluded from the system boundary. Additionally, the upgraded NGCC unit with CCS will result in a net increase of power output relative to the original unit, and therefore no makeup electricity is included within the system boundary.

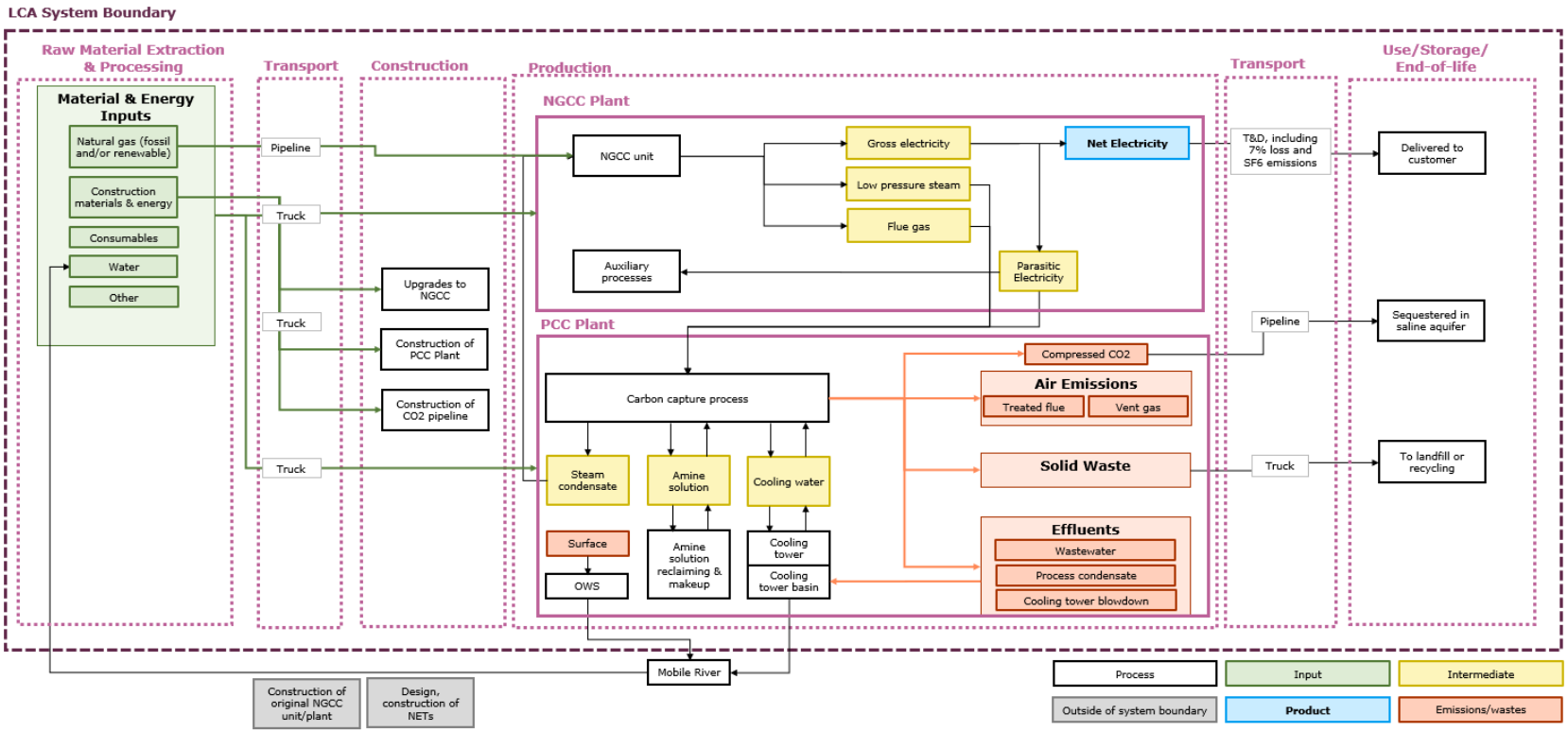

Figure 6. System boundary diagram for the NGCC with CCS system.

1.2.4 Carbon Dioxide Source

The carbon capture system will be retrofitted to an existing NGCC unit. Carbon dioxide is generated from the combustion of natural gas in the NGCC unit to generate electricity. Following combustion, the wet flue gas is pre-treated, CO_2 is absorbed using an amine solvent, and CO_2 is regenerated and compressed in multiple stages. The captured CO_2 is compressed to 2,215 pounds per square inch absolute (psia) and transported off-site via a pipeline and sequestered in a saline aquifer. The sequestered CO_2 is 99.9% pure.

1.2.5 Technology Representativeness

The proposed NGCC with CCS system is based on engineering design data developed from the Front-End Engineering Design (FEED) study, and therefore is a reasonable representation of the expected inputs and outputs of the system. Secondary and tertiary unit process datasets should represent the actual technology or be considered a reasonable proxy.

1.2.6 Geographical Representativeness

The carbon capture system will be retrofitted to an existing NGCC unit that is part of the Barry Electric Generation Plant in Bucks, Alabama. The destination of the compressed CO_2 is not finalized but may be transported in a pipeline for sequestration in wells in Houston, Texas. All construction materials and consumables will be sourced from the U.S., primarily from Texas, Louisiana, and Georgia. Secondary and tertiary unit process datasets should represent the US context at a minimum or be considered a reasonable proxy. Key deviations from the known geography of supply chains are detailed in Section 2.3.

1.2.7 Temporal Representativeness

The expected production start year is 2026 and the expected lifetime is 30 years. As such, flow-level (foreground) data should be representative of the production start year. Unit process (background) datasets should represent the most recently available data, ideally within the last six years of the study year (2023).

CO_2 stored in a saline aquifer is expected to be permanently sequestered, i.e., stored for more than 100 years. Data collected for the study represents one year of operation, which are then scaled to the reference

flow of 1 MWh delivered to the customer. Non-consumables such as plant construction materials are levelized across the project lifetime, i.e., divided by 30 years.

Case 2 would not be expected to occur until 2035; however, temporal changes such as decarbonization of the electricity grid are not considered.

1.2.8 Life Cycle Impact Assessment Methods for Results Interpretation

Life Cycle Impact Assessment (LCIA) uses characterization models for impact categories to relate the resource consumption and emissions to air, water, and terrestrial environments. LCIA results are relative expressions and do not predict actual impacts or actual damages, the exceeding of thresholds, safety margins, or risks. The study does not include normalization and weighting. Based on FOA requirements and expected relevant impacts, the impact categories in Table 2 have been modeled and are included in this report.

For the 20-year GWP models, the respective 100-year models were modified for only the GHGs listed in the FOA, i.e., CO_2, CH_4, N_2O, and SF_6. Therefore, these models are limited but considered fit-for-purpose. Other than methane, hydrofluorocarbons (HFCs) are the other major group of short-lived GHGs for which the GWP would increase, and Ramboll confirmed that none are present in the LCI at amounts high enough to impact the results (i.e., change the results by 1%).

Additionally, due to the use of multiple LCI databases that comply with different elementary flow protocols, the methods had to be modified with the addition of missing (but equivalent) elementary flows. All method modifications are detailed in Appendix 1.

Table 2. Life cycle impact assessment indicators and characterization methods.

Impact Category	Abbreviation	Units	Characterization Model
GWP, based on IPCC AR4, 100-year time horizon; accounting for carbon climate feedback	AR4: GWP-100	kg CO_2e	TRACI 2.1 (2014),[9] with modifications of missing elementary flows
GWP, based on IPCC AR4, 20-year time horizon; accounting for carbon climate feedback	AR4: GWP-20	kg CO_2e	100-year model, with CO_2, CH_4, N_2O, and SF_6 modified to the 20-year GWP values detailed in Table 3
GWP, based on IPCC AR5, 100-year time horizon; accounting for carbon climate feedback	AR5: GWP-100	kg CO_2e	TRACI 2.1 (NETL)[10], with modifications of missing elementary flows and an erroneous GWP for SF_6
GWP, based on IPCC AR5, 20-year time horizon; accounting for carbon climate feedback	AR5: GWP-20	kg CO_2e	100-year model, with CO_2, CH_4, N_2O, and SF_6 modified to the 20-year GWP values detailed in Table 3
Water consumption	WC	L	NETL, accessed via TRACI 2.1 (NETL)[10]

The 20-year and 100-year GWP factors for CO2, CH4, and N_2O utilized in this analysis are depicted in Table 3. This analysis also includes a non-GWP midpoint impact assessment category, namely, WC, which is measured as the volume difference between water withdrawal and discharge and is measured in units of liters (L).

Table 3. IPCC AR4 and AR5 GWPs[2,11]

	AR4		AR5		
GHG	20-year	100-year	20-year	100-year	Units
CO_2	1	1	1	1	kg CO_2e
CH_4	72	25	87	36	kg CO_2e

	AR4		AR5		
CH_4 - biogenic	72	25	86	34	kg CO_2e
N_2O	289	298	268	298	kg CO_2e
SF_6	16,300	22,800	17,500	23,500	kg CO_2e

1.2.9 Completeness Requirements

Per the NETL CO2U LCA Guidance Document,[3] carbon and energy balances are used to demonstrate completeness of the life cycle inventory data included in the model. The study shall include at least 99% of the carbon and energy inputs and outputs to the system boundary. Because the WC impact category is within the study scope, a water balance is also included.

1.2.10 Sensitivity and Uncertainty Analysis

The sensitivity analysis follows the requirements of the FOA, namely, assesses "key model inputs with known technical variability and/or expected variability from different site-specific commercialization scenarios."[2] Table 4 describes the parameters that are tested.

Table 4. Parameters included in the sensitivity analysis

Parameter	Change	Rationale
Capture Rate	+3%	Key model input and top contributor to results
Ammonia - SCR consumption	±10%	Data uncertainty
Ammonia - CC refrigerant usage	±10%	Data uncertainty
Antifoam consumption	±10%	Data uncertainty
Capital construction	±10%	Data uncertainty; key model input and top contributor to results
SCR catalyst consumption	±10%	Data uncertainty
T&D SF6 leakage	±10%	Top contributor to results
Cooling water consumption	±10%	Key model input
Amine consumption	±10%	Key model input

A sensitivity on the RNG input value is also conducted. As shown in Table 5, the cradle-to-gate emissions factors of RNG pathways in Rai et al. (2022) vary significantly. While Rai et al. (2022) does not include biogenic CO_2 uptake or pipeline transport, this LCA study includes accounting for biogenic CO_2 uptake and pipeline transport, and therefore these emissions factors are modified as shown in Table 5.

The least impactful pathway is anaerobic digestion with animal manure (AD with AM), while the most is AD with municipal solid waste (MSW). Using the minimum (AD with AM), maximum (AD with MSW), and baseline (AD with LFG) emission factor values, the range of RNG input required to meet the goal of net zero direct emissions is explored.

Table 5. Emission factors of various RNG pathways, based on Rai et al. (2022).

Pathway	Rai et al. (2022)[a]	Study Conversion[a,b]	Study Conversion with Biogenic CO_2 Uptake[a,c]	Study Conversion with Biogenic CO_2 Uptake and Pipeline Transport[d]
	g CO_2e/MJ RNG	kg CO_2e/kg RNG	kg CO_2e/kg RNG	kg CO_2e/kg RNG
Anaerobic Digestion - Animal Manure	-229	-11.11	-13.85	-13.57
Anaerobic Digestion - Landfill Gas	9	0.44	-2.30	-2.02
Anaerobic Digestion - Municipal Solid Waste	27	1.31	-1.43	-1.15
Anaerobic Digestion - Wastewater sludge - MDEA	13	0.63	-2.11	-1.83
Anaerobic Digestion - Wastewater sludge - MEA	18	0.87	-1.86	-1.58

Pathway	Rai et al. (2022)[a]	Study Conversion[a,b]	Study Conversion with Biogenic CO_2 Uptake[a,c]	Study Conversion with Biogenic CO_2 Uptake and Pipeline Transport[d]
	g CO_2e/MJ RNG	kg CO_2e/kg RNG	kg CO_2e/kg RNG	kg CO_2e/kg RNG
Anaerobic Digestion - Wastewater sludge - HPWS	25	1.21	-1.52	-1.24
Thermal gasification - Air	-36	-1.75	-4.48	-4.20
Thermal gasification - Catalyst	-13	-0.63	-3.37	-3.09
Thermal gasification - Steam	6	0.29	-2.45	-2.17
Power to Gas	18	0.87	-1.86	-1.58

[a] Emission factors represent cradle-to-gate (i.e., pipeline-ready compressed RNG)

[b] Assumes project-specific natural gas LHV (lower heating value) of 0.046 MMBtu/kg

[c] Assumes project-specific carbon content of natural gas of 74.69%, which translates to 2.74 kg biogenic CO_2 uptake/kg RNG

[d] Emission factors represent cradle-to-pipeline (i.e., RNG in pipeline at plant boundary)

2. LIFE CYCLE INVENTORY ANALYSIS

2.1 Modeling Platform

This project was modeled using openLCA. The supporting files included with this report are summarized in Table 6.

Table 6. List of files associated with this report.

File Name	Software	Description
GEGP Alabama NGCC with CCS LCA.zolca	openLCA	Complete model of NGCC with capture process, submodules, and unit processes

Note that datasets included in the project database from ecoinvent 3.9.1 are provided to the DOE for third party review only and cannot be shared for any other purpose due to license requirements.

2.2 Proposed System and Unit Process Descriptions

Table 7 below summarizes the key assumptions for the normal operating point (NOP) of the two cases. Appendix 2 documents the full LCI, model assumptions, and references.

Table 7. Normal operating point assumptions of the two cases.

Normal Operating Point (NOP) Assumptions				
Parameter	**Unit**	**NGCC with 95% CC**	**NGCC with 98% CC + RNG**	**Reference**
General				
Operating Hours per Year	hr/yr	7,446	7,446	[1]
Capacity factor (CF)	%	85%	85%	
Assumed lifetime	years	30	30	GEGP data request

Normal Operating Point (NOP) Assumptions				
Parameter	**Unit**	**NGCC with 95% CC**	**NGCC with 98% CC + RNG**	**Reference**
Transmission & distribution losses	%	7%	7%	[2]
Percent FNG fuel	%	100%	78.26%	Scenario-specific. For the 98% capture scenario, the amount of RNG is calculated to offset upstream and direct emissions of FNG after 98% carbon capture. See Appendix 3.
Percent RNG fuel	%	0%	21.74%	
Electricity & CO2 production				
CO_2 production	kg/yr	1,630,206,716	1,681,686,928	[1]
Gross rated capacity	MWe	604.8	597.9	[1]
Parasitic Power (Plant)	MWe	8.7	8.4	
Parasitic Power (CCS)	MWe	39.2	42.6	
Net rated capacity	MWe	556.9	546.9	
Net heat rate (LHV)	Btu/kWh	6,914	7,040	
Gross electricity production	MWh/yr	4,503,475	4,451,963	Derived from [1]
Parasitic electricity consumption (Plant)	MWh/yr	64,922	62,546	
Parasitic electricity consumption (CCS)	MWh/yr	291,734	317,200	

Normal Operating Point (NOP) Assumptions				
Parameter	**Unit**	**NGCC with 95% CC**	**NGCC with 98% CC + RNG**	**Reference**
Net electricity production	MWh/yr	4,146,819	4,072,217	
Fossil natural gas consumption (LHV)	MMBtu/yr	28,669,447	22,436,150	
Fossil natural gas consumption	kg/yr	623,199,536	487,703,807	
Renewable natural gas consumption	MMBtu/yr	0	6,233,297	Calculated based on RNG percentage - see above and Appendix 3.
Renewable natural gas consumption	kg/yr	0	135,495,729	
Natural gas LHV	MMBtu/kg	0.046	0.046	Derived from [1]
Net electricity delivered to consumer	MWh/yr	3,856,542	3,787,162	

The unit processes included in this study are summarized in Appendix 2, including details regarding model assembly. The complete openLCA database for this project has also been provided for transparency. Key modeling choices are summarized below.

- **Environmental dataset for upstream life cycle of FNG.** Ramboll used NETL's Upstream Dashboard v3[12] to model the upstream raw material extraction, processing, and transport of the fossil natural gas. The natural gas is assumed to be onshore conventional Gulf Coast gas transported via pipeline. The natural gas is sourced from three different suppliers, so the furthest distance (Transco pipeline, approximately 1,200 miles) is assumed.

- **Environmental dataset for upstream life cycle of RNG.** The RNG included in Case 2 is modeled as RNG sourced from LFG. A study completed by Rai et al. (2022)[13] on the GWP of various RNG pathways is the source of the environmental dataset for RNG. Among the RNG pathways analyzed in Rai et al. (2022), RNG from LFG is the most common in the US.[14] A few notable modifications have been made to this dataset, namely, 1) the inclusion of upstream biogenic CO_2 uptake since biogenic CO_2 combustion emissions are accounted for in the capture stage, 2) the inclusion of fuel delivery via pipeline, and 3) approximation of the individual GHG results from the CO_2e values by assuming the GWP of the avoided waste management (8 g CO_2e/MJ) is 100% methane, and deriving the GHG breakdown for the RNG life cycle (17 g CO_2e/MJ) from Figure S1 in Rai et al (2022).
- **Input value for RNG.** The amount of RNG included in Case 2 has been calculated to offset the upstream impacts of FNG production and delivery, along with the direct emissions remaining after 98% capture. These calculations are documented in Appendix 3.

2.3 Data Sources and Quality Assessment

The sources for both flow (foreground) and unit process (background) data are described in detail in Appendix 2. All flow-level data is sourced from the project-specific engineering design package and related documentation, except for the sulfur hexafluoride leakage during T&D, which was provided by the FOA. As such, the flow-level data is representative of the NGCC with CCS system. Notably, this data is based on the preliminary engineering design, and is not necessarily representative of the final design, construction, or actual operations. While this level of data quality meets the goal and scope of this study, flow-level data in future versions of this study is likely to change and may impact the LCI and LCIA results.

The unit process data are obtained from the following sources: NETL's Upstream Dashboard v3,[12] Rai et al. (2022),[13] the NETL CO2U LCI database,[10] ecoinvent v3.9.1,[15] USEEIO v2,[16] and the FOA.[2] All of

these sources are either government sources, peer reviewed articles, or reputable LCI databases that are available publicly or at cost and therefore are considered reliable and reasonably complete.

Ramboll notes that the source for the RNG environmental dataset, Rai et al. (2022),[13] only assessed AR5 GWP and did not include information regarding water consumption impacts. Additionally, it should be noted that the emission factors of the RNG pathways in the study vary significantly (-229 g CO_2e/MJ to 27 g CO_2e/MJ). The net benefit of RNG can depend on both feedstock-specific conditions, as well as various methodological choices in LCA, such as what burdens are "avoided" and can be included as a benefit to the RNG. As such, the use of the RNG with LFG dataset that we use in this study is not necessarily representative of the actual RNG market. Nonetheless, the use of this RNG dataset is considered fit-for-purpose as it meets the goal of the LCA study by demonstrating a potential pathway to reach net zero upstream and direct fuel emissions with NETs. This limitation is taken into consideration in the interpretation of the results.

Table 8 describes the temporal, geographical, and technical representativeness of the data. Uncertainties related to flow-level (foreground) data are tested with sensitivity analysis as shown in Section 4.3.

Table 8. Data quality assessment.

Type of Data	Temporal	Geographical	Technical
Flow (foreground)	All flow-level data is part of the project-specific engineering design package and therefore meets all temporal, geographical, and technical goals. The LCI of Case 2 was adapted from Case 1 using high-level scaling factors for key inputs. Some consumables, e.g., those related to the amine solvent system and reclaiming unit, have not been adjusted due to uncertainty around how these parameters would change in the 98% scenario. Therefore, Case 2 has more uncertainty.		
Unit process (background)	Most datasets are representative of conditions between 2016 and 2022 and	Most datasets represent a North American and/or US-specific context or have been	Proxy datasets have been used for the amine solvent, antifoam agent, SCR catalyst,

Type of Data	Temporal	Geographical	Technical
	therefore meet the temporal goals of the study. One exception is the Truck Transport – US dataset from the NETL CO2U LCI database, which is representative of 2006 and considered conservative.	adapted from the European or Canadian context to the North American/US context. Electricity grids have been adjusted to their appropriate eGRID region in the US, where applicable. Exceptions include the unit process for the existing NGCC plant construction (Global), the SCR catalyst (Rest-of-World [RoW]), and treatment of spent catalyst (Global). RoW and Global datasets are considered conservative.	spent catalyst treatment, and RNG transport. Additionally, an economic input-output (EIO) emission factor is used for the construction inputs. These choices are considered reasonable approximations and meet the technical goals of the study.

2.4 Conversion Factors

The conversion factors and assumptions in Table 9 were used to calculate various inputs and outputs in the LCI.

Table 9. Conversion factors and assumptions.

Conversion Factor	Value	Units	Reference/Comments
Energy			
Natural gas LHV	20866.9	Btu/lb	[1]
Natural gas LHV	46003.6	Btu/kg	Calculated from Btu/lb value
Natural gas carbon content	74.69%	%	[1]
Materials			
Density of water	1000	kg/m^3	
Density of titanium dioxide	4230	kg/m^3	[17]
Other			
Carbon dioxide molar mass	44.0098	g/mol	
Carbon molar mass	12.011	g/mol	
Ambient CO_2 concentration	0.0630%	wt%	[18]
Ambient CH_4 concentration	0.0001%	wt%	[18]
2018 to 2012 USD (PPI)	0.84	unitless	[19]

2.5 Results of Inventory Completeness Check

The completeness checks were conducted only for Case 1, as Case 2 represents the same inputs and outputs adjusted with scaling factors. Overall, the completeness checks meet the requirement of at least 99% of carbon and energy inputs and outputs included in the system boundary. Furthermore, as indicated

by the cut-off analysis, excluded processes are not expected to change the environmental impact assessment results by more than 1%.

As shown in Table 10, approximately 100% of carbon is accounted for across the life cycle, with a small discrepancy due to lack of detailed data on the properties of proprietary or generic materials such as the amine solvent and anti-foam agent.

Table 10. Carbon balance for completeness check.

Carbon Balance					
Summary					
Carbon In (kg)	**Carbon Out (kg)**	**Completeness**		**Diff (kg)**	
780,932,575	781,041,692	100.01%		-109,117	
Flow	**Expected Value**	**Unit**	**Carbon Content (%)**	**Carbon Value**	**Units**
Inputs				**780,932,575**	**kg**
Fuel/Combustion Air					
Natural gas	623,199,536	kg	74.7%	465,448,561	kg
Fresh air to gas turbine	16,367,711,253	kg	0.018%	2,877,739	kg
EGR outlet flow	10,622,400,670	kg	2.939%	312,217,197	kg
Consumables					
Amine solvent – Make-up of 100 wt% Solution	490,000	kg	46%	223,913	kg
Anti-Foam Agent	176	kg	32%	57	kg
Activated Carbon	165,108	kg	100%	165,108	kg
Outputs				**781,041,692**	**kg**
Fuel/Combustion Air					
Flow to EGR	11,045,324,807	kg	3%	312,217,197	kg
Products					

Carbon Balance					
Summary					
Carbon In (kg)	**Carbon Out (kg)**	**Completeness**		**Diff (kg)**	
Compressed CO_2, sequestered	1,630,206,716	kg	27%	444,918,322	kg
Solid wastes					
Used amine solvent	439,410	kg	46%	200,795	kg
Spent activated carbon bed	165,108	kg	100%	165,108	kg
Wastewater					
Process condensate	367,122,365	kg	0.0037%	13,458	kg
Wastewater from CO_2 compressor, chiller, and reclaimer units	54,221,627	kg	0.025%	13,413	kg
Air emissions					
Treated Flue Gas	14,645,550,116	kg	0.16%	23,416,428	kg
Vent gas	6,977,817	kg	1.4%	96,970	kg

kg: kilogram

As shown in Table 11, energy going into the system in the form of natural gas is completely accounted for by the consumption and losses in the plant and during transmission and distribution, and the net electricity delivered to the customer.

Table 11. Energy balance for completeness check.

Energy Balance			
Summary			
Energy In (MMBtu)	**Energy Lost/Out (MMBtu)**	**Completeness**	**Diff (MMBtu)**
28,669,447	28,669,447	100.00%	0

Flow	**Energy Content**	**Unit**
Inputs	**28,669,447**	**MMBtu**
Natural gas	28,669,447	MMBtu
Consumption/Losses	**15,510,381**	
Natural gas to electricity conversion	13,302,953	MMBtu
Parasitic electricity consumption – Plant & CCS	1,216,961	MMBtu
T&D losses	990,467	MMBtu
Outputs	**13,159,066**	**MMBtu**
Electricity delivered to customer	13,159,066	MMBtu
For reference		
Net electricity generation	14,149,533	MMBtu

MMBtu: Metric Million British Thermal Unit

As shown in Table 12, approximately 100% of the water is accounted for across the life cycle, with some minor discrepancies due to differences across data sources.

Table 12. Water balance for completeness check.

Water Balance					
Summary					
Water In (kg)	**Water Out (kg)**	**Completeness**		**Diff (kg)**	
7,933,391,578	7,930,519,929	99.96%		2,871,649	
Flow	**Expected Value**	**Unit**	**Water Content (%)**	**Water Value**	**Units**
Inputs				**7,933,391,578**	**kg**
Post-combustion Flue Gas (wet)	16,567,987,211	kg	6.4%	1,058,806,268	kg
Low-Pressure Steam	1,985,688,940	kg	100.0%	1,985,688,940	kg
Potable Water	3,377,115	kg	100.0%	3,377,115	kg
Demineralized Water	172,824,260	kg	100.0%	172,824,260	kg
Cooling tower makeup	4,669,775,676	kg	100.0%	4,669,775,676	kg
Service water	42,214,445	kg	100.0%	42,214,445	kg
Caustic Soda - 50 wt% NaOH Solution	1,409,749	kg	50.0%	704,874	kg
Outputs				**7,930,519,929**	**kg**
Compressed CO_2, sequestered	1,630,206,716	kg	0.00001%	203	kg
Steam Condensate	1,985,688,940	kg	100.0%	1,985,688,940	kg
Potable water discharge	3,377,115	kg	100.0%	3,377,115	kg
Cooling tower evaporation	3,430,679,433	kg	100.0%	3,430,679,433	kg
Cooling tower blowdown	1,239,096,242	kg	100.0%	1,239,096,242	kg
Process condensate	367,122,365	kg	100.0%	366,949,478	kg

Water Balance					
Wastewater from CO_2 compressor, chiller, and reclaimer units	54,221,627	kg	98.6%	53,441,610	kg
Surface water (potentially contaminated)	42,214,445	kg	100.0%	42,214,445	kg
Treated Flue Gas	14,645,550,116	kg	5.5%	808,982,173	kg
Vent gas	6,977,817	kg	1.3%	90,290	kg

Table 13 shows results for the cut-off analysis for excluded materials. Based on design team expertise, these materials are unlikely to exceed the minimum material usage that would be required to change the environmental impact results by 1%.

Table 13. Cut-off analysis.

Excluded material/process	Min. material usage to exceed 1% threshold (tonne material/yr)	Comment
Lubricating oil	300	Usage is unlikely to exceed this amount.
Air filter (incl. waste treatment)	60	Usage is unlikely to exceed this amount.

2.6 Allocation Procedures

The Proposed Product System only has one primary product, i.e., electricity delivered to the customer, so no allocation procedures were required. For end-of-life, this study follows the cut-off allocation method, in which the primary production of materials is allocated to the primary user of the material and producers of waste do not receive any credit for recycling of materials resulting from a waste treatment process. Furthermore, the burdens of recycling processes are assigned to secondary (recycled) materials.[20,21]

3. LIFE CYCLE IMPACT ASSESSMENT

3.1 Data Quality Assessment

The data limitations related to LCIA that may impact the interpretation of the results are related to the RNG environmental dataset included in Case 2, namely, the lack of water consumption inventory and that the RNG (LFG) dataset is not necessarily representative of the actual RNG market. Other uncertainties and exclusions are minor, as summarized in the sensitivity and cut-off analyses in Section 2.5.

3.2 Life Cycle Impact Assessment Results

Table 14 shows the impacts of the NGCC with 95% CC and NGCC with 98% CC and RNG cases. See Section 4 for interpretation of these results and Appendix 4 for complete LCIA results.

Table 14. LCIA results for both cases, with a reference flow of 1 MWh

Impact Category	NGCC with 95% Capture	NGCC with 98% Capture and RNG	Unit
AR5: GWP-100	1.18E+02	1.66E+01	kg CO_2e/MWh
WC	9.66E+02	1.03E+03	L/MWh

4. LIFE CYCLE INTERPRETATION

Interpretation involves analyzing the study results against the established goal and scope. The primary goal and scope of the study is to calculate the life cycle GHG emissions and water consumption (cradle-to-delivered electricity) of producing electricity from the NGCC with CCS plant and proposed NETs. This section provides GWP and WC results per life cycle stage (Section 4.1), and contribution by significant process (Section 4.2). Significant assumptions and data gaps were also assessed for their impact on overall results with a sensitivity analysis in Section 4.3. The variation in results for all four GWP methods are presented in Section 4.4. Finally, the results were benchmarked against NETL values as shown in Section 4.5. AR5: GWP-100 is the default GWP method used for reporting results in this report, with the results for the other GWP methods included in Section 4.4.

Overall, we find that the life cycle impacts of Case 1 are 118 kg CO_2e/MWh and 966 L water/MWh. With Case 2's increase in capture rate from 95% to 98% and inclusion of approximately 22% RNG, which has a net negative emission factor, the life cycle GWP impacts are much lower at 16.6 kg CO_2e/MWh. However, WC for Case 2 increases to 1,028 L/MWh. The inclusion of RNG to reach net zero upstream and direct emissions from the fuel results in an 86% decrease in life cycle emissions compared to Case 1. A higher percentage of RNG would achieve net zero emissions across the entire life cycle.

Interpretation Note

When reviewing the results for Case 2 where RNG is included, it is important to consider the difference between truly "negative" emissions (i.e., removal) and avoided emissions.[22] The RNG emission factor for LFG used in this study includes both, as there are removal emissions from biogenic CO_2 uptake and avoided emissions from conventional landfill management practices. These separate types of emissions are illustrated in Figure 7 and distinguished in the results.

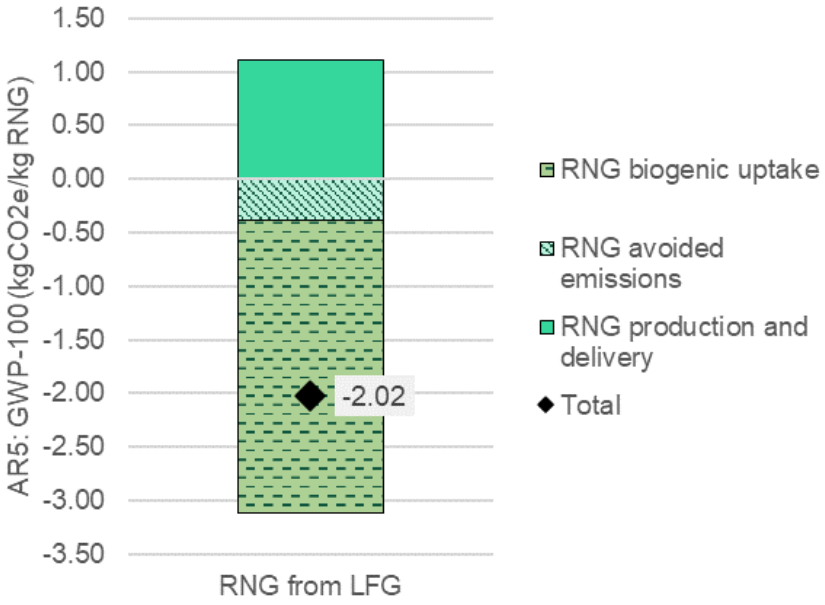

Figure 7. Emission factor for RNG from LFG showing different categories of emissions.

4.1 Results by Life Cycle Stage

Figure 8 (AR5: GWP-100) and Figure 9 (WC) illustrate the life cycle impacts by life cycle stage. GWP results are primarily driven by upstream raw material extraction and processing, while WC results are primarily driven by direct consumption during the production phase. Further discussion is included in Section 4.2, Contribution Analysis.

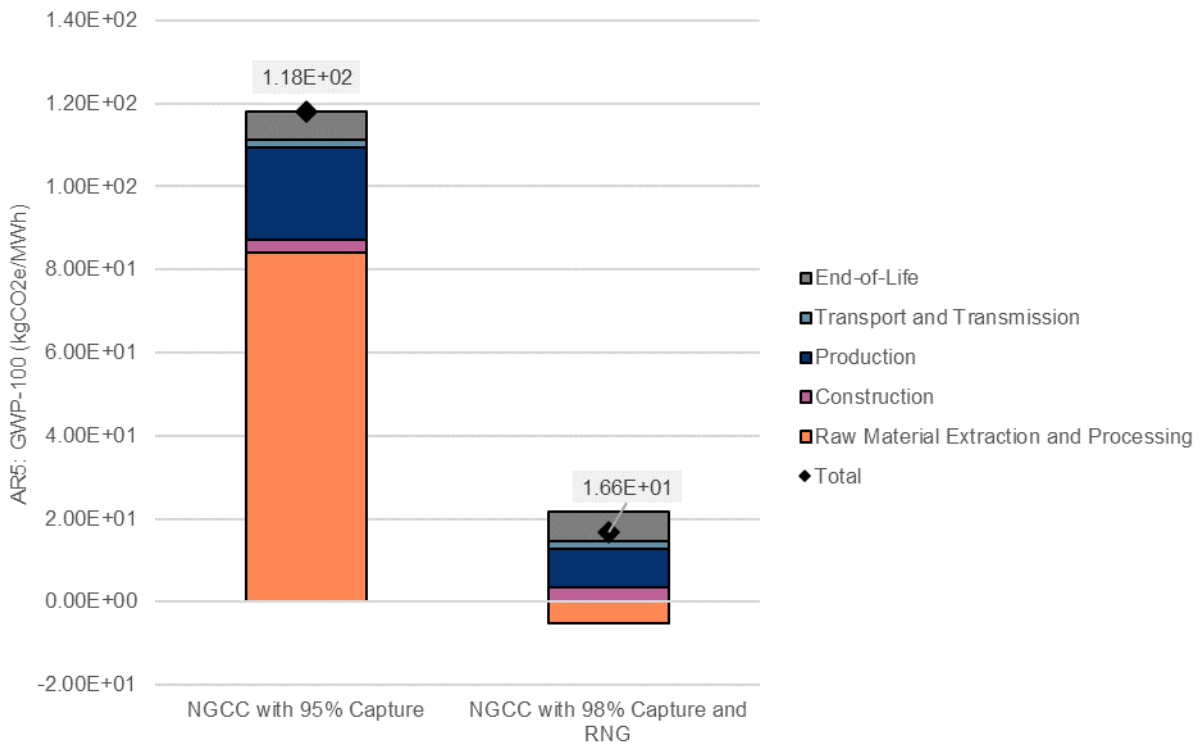

Figure 8. Life cycle impact by life cycle stage for AR5: GWP-100 of both cases, for a reference flow of 1 MWh

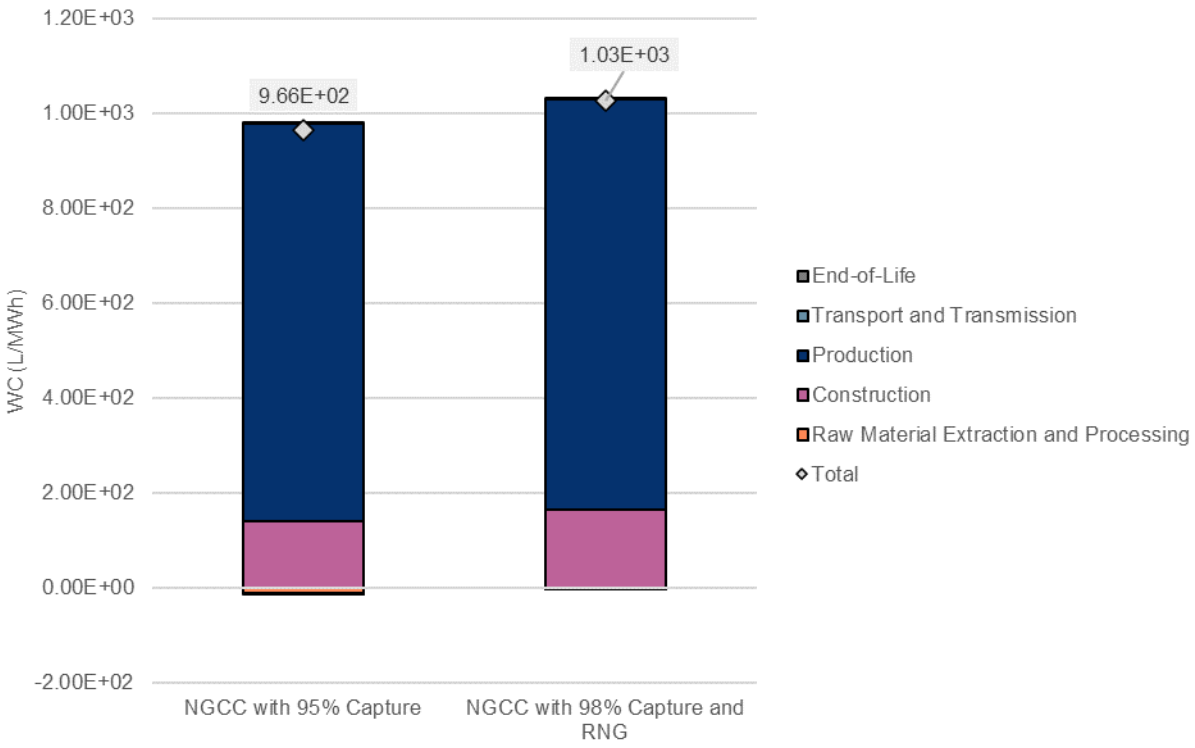

Figure 9. Life cycle impact by life cycle stage for WC of both cases, for a reference flow of 1 MWh

4.2 Contribution Analysis

Figure 10 (AR5: GWP-100) and Figure 11 (WC) illustrate the key processes that are contributing to the impacts of the two cases. A description of each impact category and their primary drivers is provided below.

- **AR5: GWP-100.** For Case 1, the primary drivers are the upstream extraction, production, and delivery impacts of the FNG (70%), and the remaining direct emissions not captured ("Direct", 19%). For Case 2, the primary drivers are the upstream extraction, production, and delivery impacts of the FNG (27%), the upstream production and delivery impacts of the RNG (16%), and RNG biogenic CO_2 uptake (-41%). With the inclusion of RNG, the NGCC with 98% Capture reaches net zero upstream and direct emissions from the fuel (e.g., achieves a 99.4% percent reduction in direct emissions relative to the NGCC unit without carbon capture). This also results in an 86% reduction in life cycle emissions relative to the NGCC with 95% CC case.

- **WC.** For Case 1, the primary drivers are direct water consumption at the plant (79%, includes demineralized water and cooling water), and construction (13%). Because natural gas extraction generates "produced water", i.e., discharges more water than it consumes, the upstream FNG production and delivery reduces WC by 4%. For Case 2, the results are very similar with a slight increase in the direct consumption (due to increased cooling needs for the higher carbon capture rate), a decrease in FNG, and an increase from new capital construction because Case 2 requires an increase in capital equipment. It should be noted that for Case 2, the RNG environmental dataset does not include water consumption for production (only delivery), and therefore water consumption is potentially higher than what is presented here.

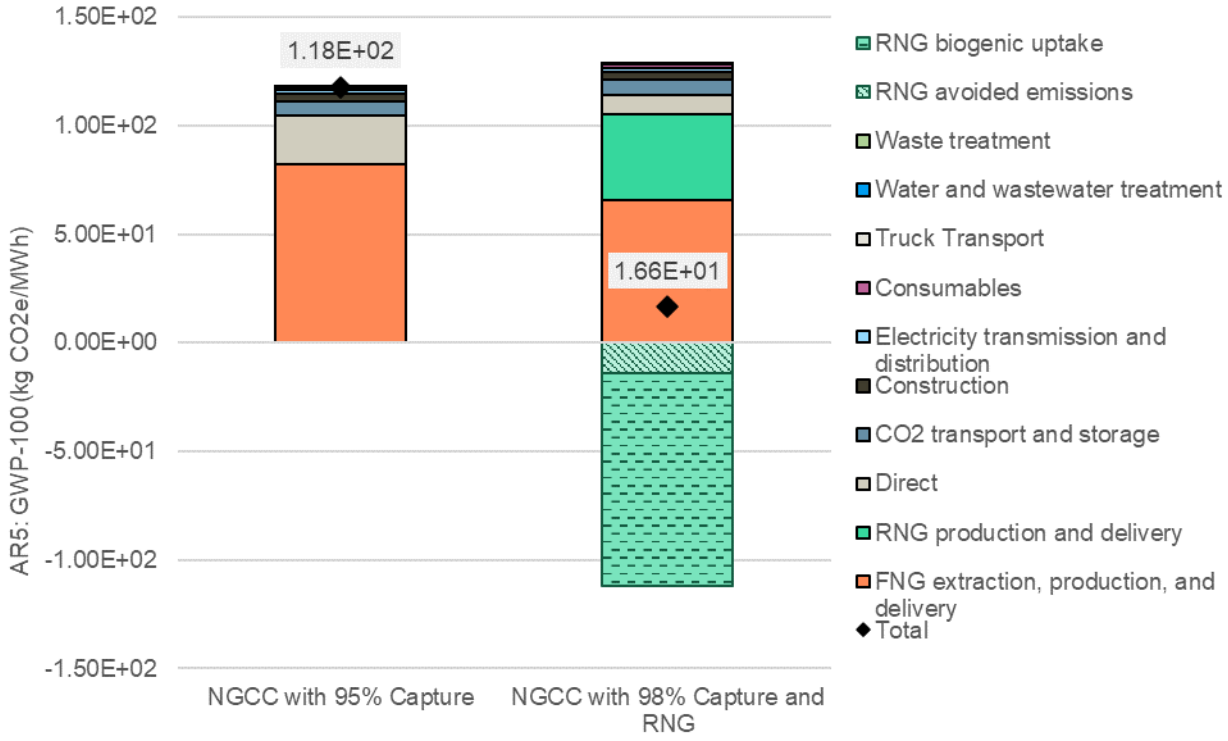

Figure 10. Contribution analysis for AR5: GWP-100 of both cases, for a reference flow of 1 MWh.

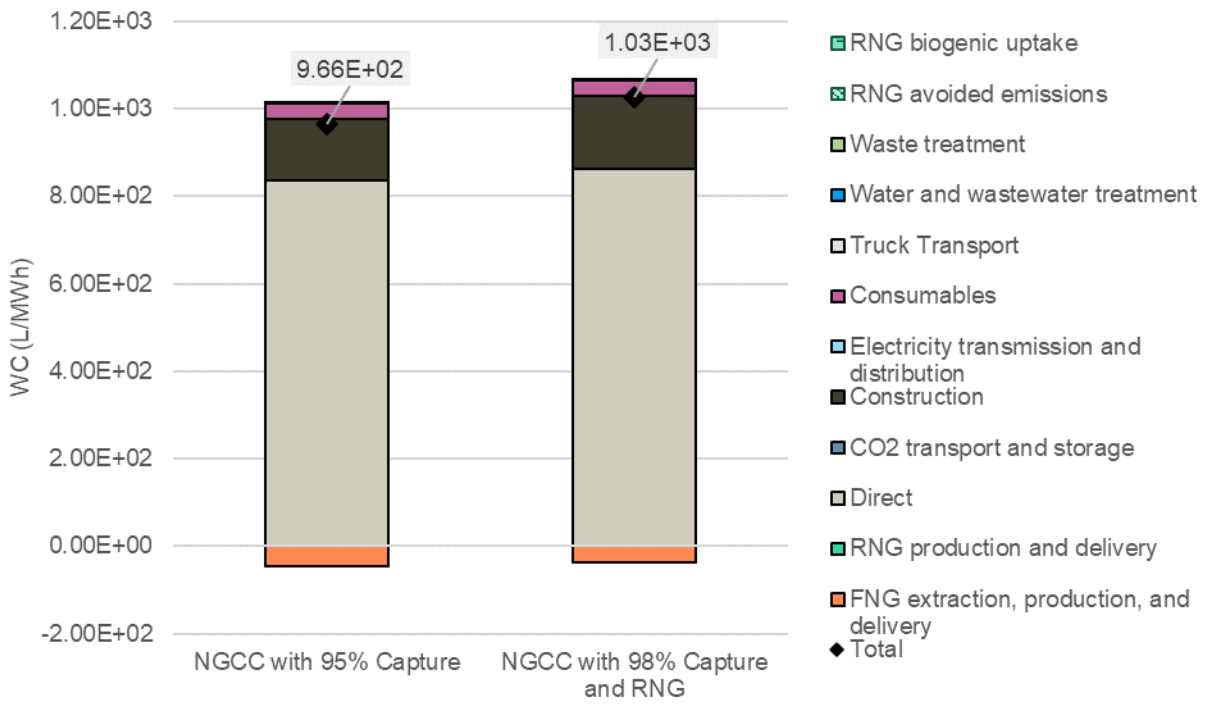

Figure 11. Contribution analysis for WC of the NGCC with 95% CC and NGCC with 98% CC and RNG cases, for a reference flow of 1 MWh.

4.3 Results of Sensitivity Analysis

Figure 12 summarizes the model's sensitivity to various parameters. All parameters were increased by 10% (+10%) and decreased by 10% (-10%), except for the capture rate, which was increased by 3% to align with the NGCC with 98% CC and RNG case included in this study. Only results for the +10% are shown as the relationships are linear and exhibit an equal but opposite effect when decreased by 10%.

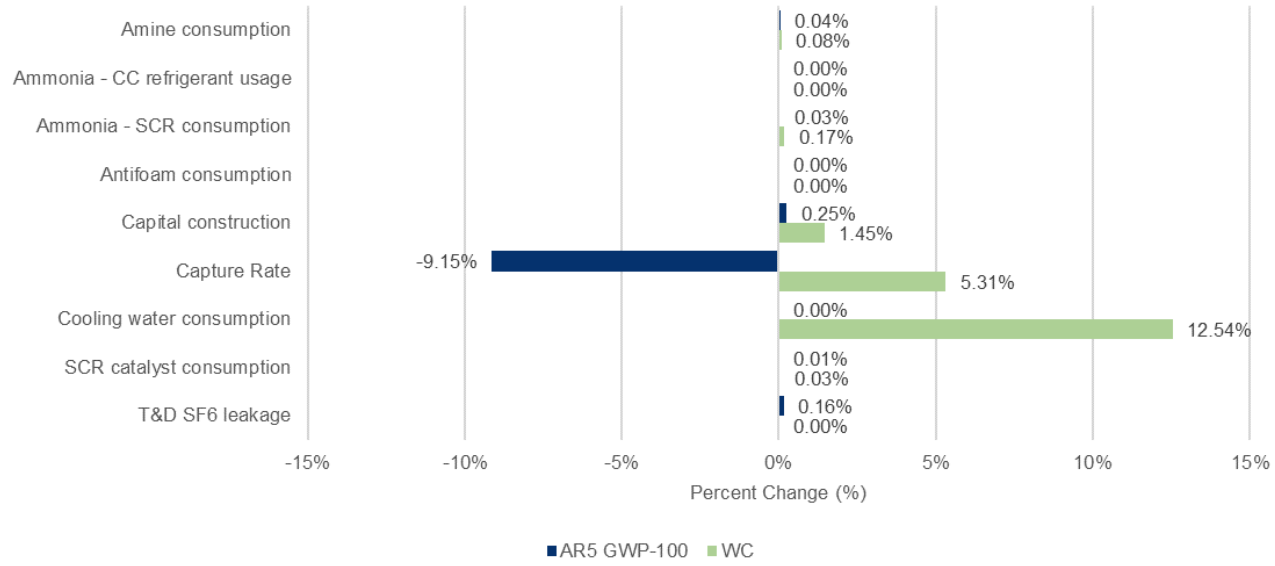

Figure 12. Sensitivity analysis results.

As shown in Figure 12, the most sensitive parameters include:

- **Capture rate.** As expected, the model is most sensitive to the capture rate, since a 3% increase in capture rate results in an approximately 9% decrease in GWP and 5% increase in WC. A change in the capture rate has a ripple effect on other inputs, such as auxiliary energy consumption, cooling water consumption, amine consumption, and capital construction. The capture rate is a key system parameter that will not vary much once the system design is finalized, but represents an alternative commercialization scenario to the 95% capture case.
- **Cooling water consumption.** The model is also sensitive to cooling water consumption, specifically for the WC impact category, since a 10% increase in the cooling tower makeup and evaporation rate results in an over 12% increase in WC. Cooling water consumption is directly related to the carbon capture rate, as cooling is an essential step throughout the capture process, particularly in the compression and chilling stage. Once the system design is finalized, the cooling water consumption rate is not expected to vary much.

Other parameters were tested due to relative uncertainty of their input values. However, increases of 10% to the parameters did not have a significant impact on the results, with all changes increasing the results by less than 0.2%. Capital construction is the one exception, as a 10% increase in the input resulted in a 0.25% increase in GWP and 1.45% increase in WC. These changes are still relatively small and therefore the uncertainty related to capital construction is not expected to significantly impact the interpretation of the results.

A sensitivity on the RNG input value was also conducted. Figure 13 illustrates the results of the sensitivity analysis. The relationship between the emission factor and percentage of RNG input is clearly nonlinear: a 92% increase in the emission factor results in a 750% increase in the RNG input percentage (when comparing AD with AM to AD with MSW).

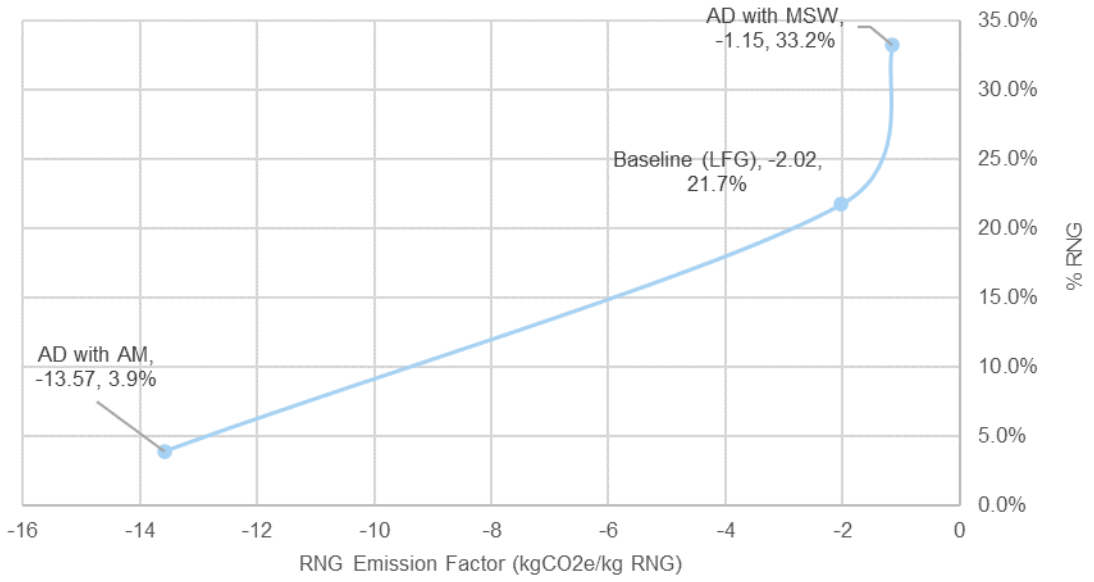

Figure 13. Sensitivity analysis of RNG input value.

The variation in the RNG input percentage is important to highlight because the RNG EF could vary significantly depending on the actual market and technology/pathway development, and as such, the amount of RNG needed to achieve the same result of net zero direct emissions also varies. This is important for two reasons:

- **Amount of carbon removed.** The amount of carbon removed is directly related to the amount of RNG included in the fuel mix, as RNG coupled with CCS acts as a NET by uptaking biogenic CO_2 during the growth of plant matter and sequestering the biogenic CO_2 permanently. Therefore, more RNG results in more carbon removed.
- **Operating costs.** As discussed in the TEA, the cost of RNG is much higher than that of FNG and as such, operating costs increase significantly as the amount of RNG included increases.

This topic represents an area for further exploration as this project progresses.

4.4 GWP Methods

The LCIA was conducted for four distinct sets of GWP values: AR5 GWP-100, AR5 GWP-20, AR4 GWP-100, and AR4 GWP-20. The AR4 values are from an older iteration of the IPCC Assessment Report but are still widely used in many GHG accounting methods and sources. For the primary GHGs inventoried, the major differences are that methane and sulfur hexafluoride have lower GWP values in AR4 compared to AR5. The GWP-20 methods account for a shorter time horizon of 20 years, which is more relevant for shorter-lived gases such as methane, which has a much higher GWP in the short term. Figure 14 shows the results for both cases.

- **NGCC with 95% CC case.** The difference between AR4 and AR5 is noticeable, with AR4 results lower than their AR5 counterparts. For GWP-20, methane from upstream FNG production and delivery drives the increase in results.
- **NGCC with 98% CC and RNG.** In this case, the AR4 results are higher than their AR5 counterparts due to the dampened effect of the avoided methane associated with the RNG. For GWP-20, the avoided methane from upstream RNG production and delivery (i.e., avoided conventional manure waste management practices) exaggerates the impact of the RNG and results in an overall net negative life cycle GWP for the system.

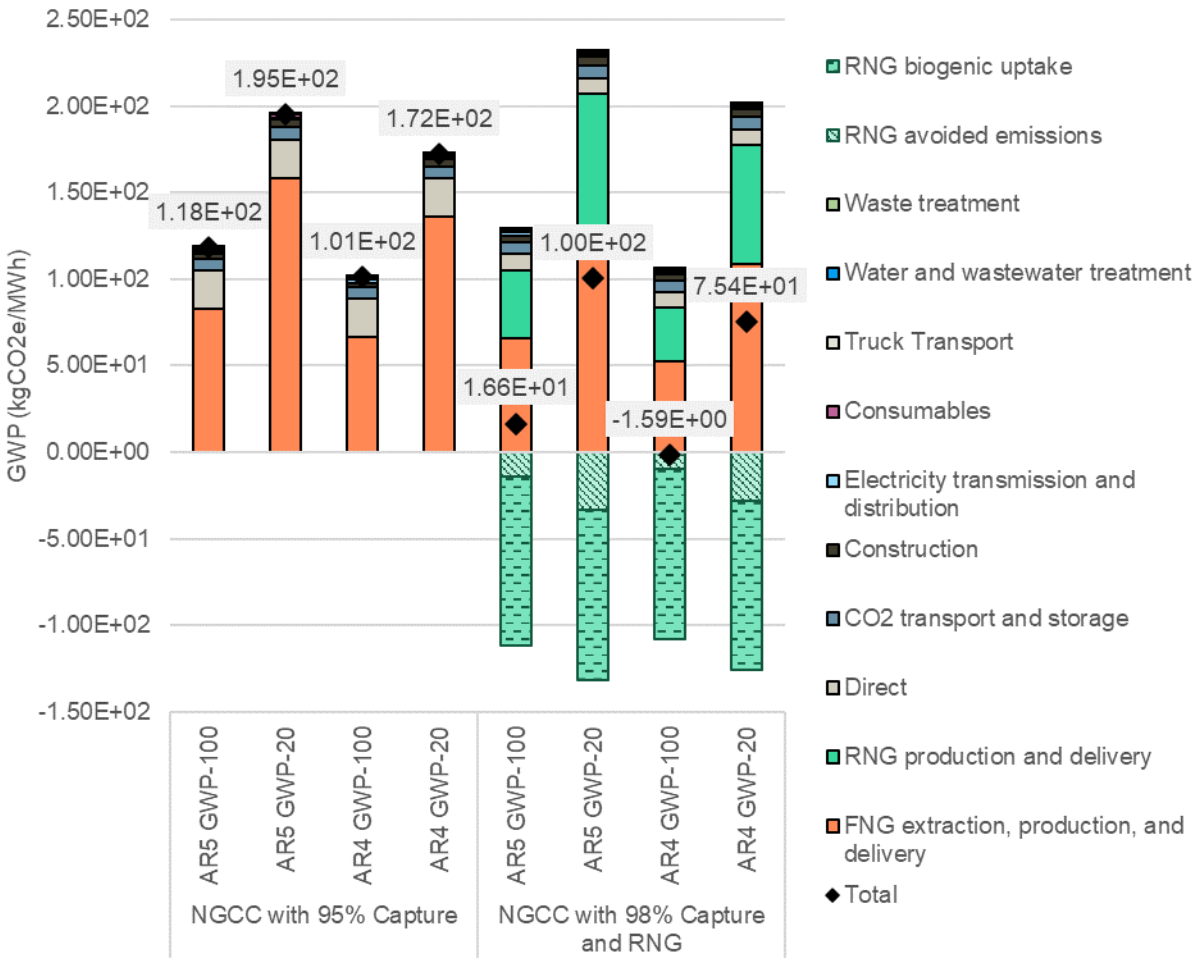

Figure 14. Results for four distinct GWP impact assessment methods.

4.5 Benchmarking

As shown in Figure 15, the results are benchmarked against similar systems available in the NETL CO2U LCI database, namely, the NGCC Power Plant, capture and NGCC Power Plant, no capture. This study's NGCC with 95% capture system is 73.5% lower than the benchmark NGCC Power Plant (no capture) from the NETL CO2U LCI database. There are a few limitations to this comparison, including that the NETL unit process with carbon capture represents an approximately 89% capture rate[23] and that the NETL unit processes are cradle-to-gate, and therefore would be expected to be higher if T&D losses and SF_6 leakage were considered.

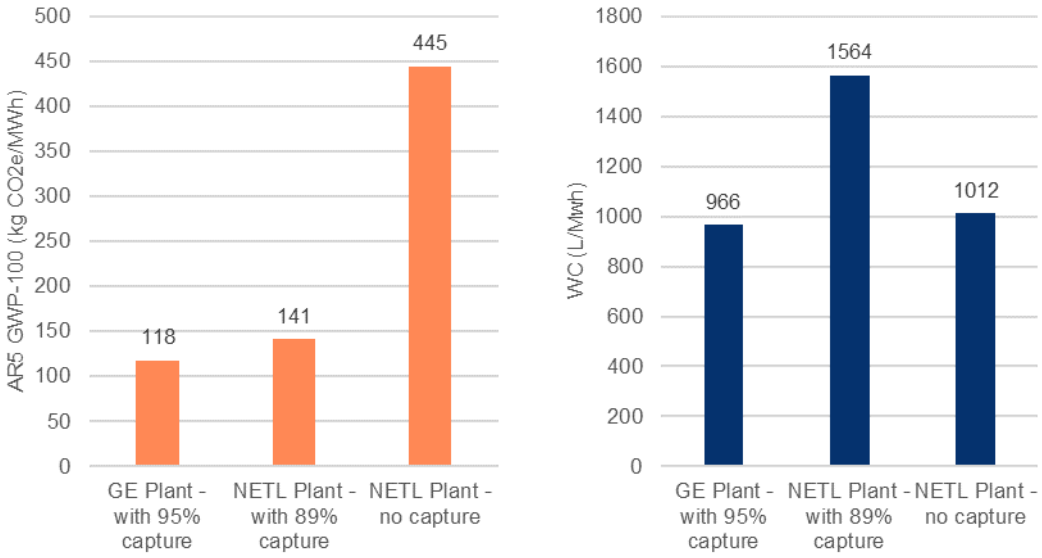

Figure 15. Results benchmarking.

5. CONCLUSIONS

This analysis meets the goal of the study to conduct an LCA of the proposed NGCC with CCS plant and NETs. The life cycle GWP and WC impacts of Case 1 (NGCC with 95% CC and 100% FNG) are 118 kg CO_2e/MWh and 966 L water/MWh, respectively. Case 2 (NGCC with 98% CC and 78/22% FNG/RNG) reaches net zero upstream and direct emissions from the fuel (e.g., achieves a 99.4% percent reduction in direct emissions relative to the NGCC unit without carbon capture), with net life cycle GWP impacts of 16.6 kg CO_2e/MWh. However, WC for Case 2 increases to 1,028 L/MWh. Overall, increasing the capture rate to 98% and including RNG (which, coupled with CCS, serves as a NET) results in an 86% reduction in life cycle GWP relative to the NGCC with 95% CC case.

Limitations represent opportunities for improvement to the study, including:

- **Finalization of System Design and Refinement with Actual Operations.** The sensitivity analysis results indicated that the model is sensitive to key project parameters such as the capture rate and cooling water consumption. These parameters are not expected to vary significantly once the system design is finalized, and as such, a future iteration of this study is expected to have reduced potential variation of key parameters. Additionally, the flow-level data used in this study is based on the preliminary engineering design, and is not necessarily representative of the final design, construction, or actual operations. While this level of data quality meets the goal and scope of this study, flow-level data in future versions of this study are likely to change and may impact the LCI and LCIA results.
- **Further Research of NET Options.** The RNG EF could vary significantly depending on the actual market and technology/pathway development, and as such, the amount of RNG needed to achieve the same result of net zero direct emissions also varies. This is important because the amount of RNG impacts both the amount of carbon removed and the operational costs, as discussed in the TEA. Overall, RNG is just one option to satisfy the need for NETs to meet net

zero goals. As such, deeper exploration of RNG and other NET options could be conducted in the future.

- **Refinement of Inputs and Environmental Datasets.** Several inputs and environmental datasets included in the study are estimates or proxies but considered fit-for-purpose for the current study. For example, the RNG environmental dataset does not include water consumption for production (only delivery), and therefore water consumption is potentially higher than what is presented here. Additionally, a spend-based EIO factor is used for new construction. Once further details about the system have been confirmed, these and other inputs and datasets can be refined.

Updates and finalization to the system design will be considered in the final version of the LCA study.

6. CRITICAL REVIEW

The U.S. DOE FECM will serve as the critical reviewer for this study.

7. REFERENCES

[1] GE Gas Power. (July 2023). Techno-Economic Analysis (Preliminary): Retrofittable Advanced Combined Cycle Integration for Flexible Decarbonized Generation, Site: Alabama Power/Southern Co Plant Barry Unit 6.

[2] Department of Energy Office of Fossil Energy and Carbon Management. (March 8, 2022). "Carbon Capture R&D for Natural Gas and Industrial Point Sources, and Front-End Engineering Design Studies for Carbon Capture Systems at Industrial Facilities and Natural Gas Plants." Funding Opportunity Announcement No. DE-FOA-0002515, Amendment 000002.

[3] T. J. Skone, M. Mutchek, M. Krynock, S. Moni, S. Rai, J. Chou, D. Carlson, M. Jamieson, E. Dale, G. Cooney, and A. Kumar, "Carbon Dioxide Utilization Life Cycle Analysis Guidance for the U.S. DOE Office of Fossil Energy and Carbon Management Version 2.0" National Energy Technology Laboratory, Pittsburgh, January 2022.

[4] International Standards Organization (ISO) 14040. (2006). Environmental management- Life Cycle Assessment – Principals and framework, Second edition.

[5] International Standards Organization ISO 14044. (2006). Environmental management- Life cycle assessment-requirements and guidelines.

[6] US EPA, Office of Research and Development, National Risk Management Research Laboratory, Sustainable Technology Division. (2014). Tool for the Reduction and Assessment of Chemical and other environmental Impacts 2.1. Available from https://www.epa.gov/chemical-research/tool-reduction-and-assessment-chemicals-and-other-environmental-impacts-traci

[7] Skone, Timothy J., Krynock, Michelle, & Jamieson, Matthew. NETL CO2U openLCA LCI Database Version 2.1. United States. https://doi.org/10.2172/1872547

[8] Argonne National Laboratory. (2020). Renewable Natural Gas (RNG) for Transportation: Frequently Asked Questions. Available at https://www.anl.gov/sites/www/files/2020-11/RNG_for_Transportation_FAQs.pdf

[9] US EPA, Office of Research and Development, National Risk Management Research Laboratory, Sustainable Technology Division. (2014). Tool for the Reduction and Assessment of Chemical and other environmental Impacts 2.1. Available from https://www.epa.gov/chemical-research/tool-reduction-and-assessment-chemicals-and-other-environmental-impacts-traci

[10] Skone, Timothy J., Krynock, Michelle, & Jamieson, Matthew. NETL CO2U openLCA LCI Database Version 2.1. United States. https://doi.org/10.2172/1872547

[11] IPCC, "Climate Change 2013: The Physical Science Basis. Contribution of Working Group I to the Fifth Assessment Report of the Intergovernmental Panel on Climate Change," Cambridge University Press, Cambridge and New York, 2013.

[12] NETL. (2016). NETL Upstream Dashboard Version 3 - Version 3. Pittsburgh, PA: National Energy Technology Laboratory. Retrieved from https://netl.doe.gov/energy-analysis/details?id=a79a1cff-c7a6-43e0-ae57-16dcc806840d

[13] Srijana Rai, Danny Hage, James Littlefield, Gabrielle Yanai, and Timothy J. Skone. Comparative Life Cycle Evaluation of the Global Warming Potential (GWP) Impacts of Renewable Natural Gas Production Pathways. Environmental Science & Technology 2022 56 (12), 8581-8589. DOI: 10.1021/acs.est.2c00093

[14] Mintz, M. and Vos, P. Database of Renewable Natural Gas (RNG) Projects: 2021 Update, Argonne National Laboratory, January 2022, https://www.anl.gov/es/reference/renewable-natural-gas-database.

[15] Ecoinvent. (2022). Ninth update of ecoinvent version 3 (ecoinvent V3.9.1, Cut-off system model). Retrieved from openLCA software version 2.0: https://ecoinvent.org/the-ecoinvent-database/data-releases/ecoinvent-3-9-1/

[16] Ingwersen, W.; Li, M.; Young, B.; Vendries, J.; Birney, C. USEEIO v2.0, the US Environmentally-Extended Input-Output Model V2.0. Scientific Data 9.1 (2022): 1-24. https://doi.org/10.1038/s41597-022-01293-7.

[17] https://en.wikipedia.org/wiki/Titanium_dioxide

[18] https://www.engineeringtoolbox.com/air-composition-d_212.html

[19] Chain-Type Price Indexes for Gross Output by Industry, Bureau of Economic Analysis (June 2023). Accessed at https://view.officeapps.live.com/op/view.aspx?src=https%3A%2F%2Fapps.bea.gov%2Findustry%2FRelease%2FXLS%2FGDPxInd%2FGrossOutput.xlsx&wdOrigin=BROWSELINK

[20] Ecoinvent. (n.d.). Allocation cut-off by classification. https://www.ecoinvent.org/database/system-models-in-ecoinvent-3/cut-off-system-model/allocation-cut-off-by-classification.html

[21] Frischknecht, R. LCI modelling approaches applied on recycling of materials in view of environmental sustainability, risk perception and eco-efficiency. *Int J Life Cycle Assess* 15, 666–671 (2010). https://doi.org/10.1007/s11367-010-0201-6

[22] Terlouw, Tom, Christian Bauer, Lorenzo Rosa, and Marco Mazzotti. “Life Cycle Assessment of Carbon Dioxide Removal Technologies: A Critical Review.” Energy and Environmental Science 14, no. 4 (January 1, 2021): 1701–21. https://doi.org/10.1039/d0ee03757e.

[23] Skone, Timothy J., Schivley, Greg, Jamieson, Matt, Marriott, Joe, Cooney, Greg, Littlefield, James, Mutchek, Michele, Krynock, Michelle, and Shih, Chung Yan. 2018. "Life Cycle Analysis: Natural Gas Combined Cycle (NGCC) Power Plants". United States. https://doi.org/10.2172/1562914. https://www.osti.gov/servlets/purl/1562914.

APPENDIX 1
LCIA METHOD MODIFICATIONS

Appendix 1 – LCIA Method Modifications

Short Name	openLCA Method Name
AR5: GWP-100	Global Warming Potential [100 yr] - TRACI 2.1 (NETL-RAM) [AR5, FOA factors]
AR4: GW-100	Global Warming Potential [100 yr] - TRACI 2.1 (RAM) [AR4, FOA factors]
AR5: GWP-20	Global Warming Potential [20 yr] - TRACI 2.1 (NETL-RAM) [AR5, FOA factors] - LIMITED 20 YR
AR4: GWP-20	Global Warming Potential [20 yr] - TRACI 2.1 (RAM) [AR4, FOA factors] - LIMITED 20 YR
WC	Water Consumption (NETL) - modified

Method	Flow	Category	Factor	Unit	Change	UUID (if new)
AR5: GWP-100	Carbon dioxide	Elementary flows/emission/air	1	kg CO2e/kg	Missing elementary flow	b6f010fb-a764-3063-af2d-bcb8309a97b7

Method	Flow	Category	Factor	Unit	Change	UUID (if new)
AR5: GWP-100	Methane	Elementary flows/emission/air	36	kg CO2e/kg	Missing elementary flow	aab83476-ec6c-3742-af85-15d320b7ce80
AR5: GWP-100	Nitrous oxide	Elementary flows/emission/air	298	kg CO2e/kg	Missing elementary flow	cfee0524-7ad6-300b-b050-6249135a2492
AR5: GWP-100	Sulfur hexafluoride	Elementary flows/Emission to air/high population density	23500	kg CO2e/kg	GWP incorrect	N/A - already in method
AR5: GWP-100	Sulfur hexafluoride	Elementary flows/Emission to air/low population density	23500	kg CO2e/kg	GWP incorrect	N/A - already in method
AR5: GWP-100	Sulfur hexafluoride	Elementary flows/Emission to air/low population density, long-term	23500	kg CO2e/kg	GWP incorrect	N/A - already in method

Method	Flow	Category	Factor	Unit	Change	UUID (if new)
AR5: GWP-100	Sulfur hexafluoride	Elementary flows/Emission to air/lower stratosphere + upper troposphere	23500	kg CO2e/kg	GWP incorrect	N/A - already in method
AR5: GWP-100	Sulfur hexafluoride	Elementary flows/Emission to air/unspecified	23500	kg CO2e/kg	GWP incorrect	N/A - already in method
AR4: GW-100	Carbon dioxide	Elementary flows/emission/air	1	kg CO2e/kg	Missing elementary flow	b6f010fb-a764-3063-af2d-bcb8309a97b7
AR4: GW-100	Methane	Elementary flows/emission/air	25	kg CO2e/kg	Missing elementary flow	aab83476-ec6c-3742-af85-15d320b7ce80
AR4: GW-100	Nitrous oxide	Elementary flows/emission/air	298	kg CO2e/kg	Missing elementary flow	cfee0524-7ad6-300b-b050-6249135a2492

Method	Flow	Category	Factor	Unit	Change	UUID (if new)
AR4: GW-100	Nitrous Oxide	Elementary flows/Emission to air/unspecified	298	kg CO2e/kg	Missing elementary flow	ffd60116-e6a8-4727-88df-a4f752a78e17
AR5: GWP-20	Carbon dioxide	Elementary flows/emission/air	1	kg CO2e/kg	Missing elementary flow	b6f010fb-a764-3063-af2d-bcb8309a97b7
AR5: GWP-20	Dinitrogen monoxide	Elementary flows/Emission to air/high population density	268	kg CO2e/kg	20 year GWP	N/A - already in method
AR5: GWP-20	Dinitrogen monoxide	Elementary flows/Emission to air/low population density	268	kg CO2e/kg	20 year GWP	N/A - already in method
AR5: GWP-20	Dinitrogen monoxide	Elementary flows/Emission to air/low population density, long-term	268	kg CO2e/kg	20 year GWP	N/A - already in method

Method	Flow	Category	Factor	Unit	Change	UUID (if new)
AR5: GWP-20	Dinitrogen monoxide	Elementary flows/Emission to air/lower stratosphere + upper troposphere	268	kg CO2e/kg	20 year GWP	N/A - already in method
AR5: GWP-20	Dinitrogen monoxide	Elementary flows/Emission to air/unspecified	268	kg CO2e/kg	20 year GWP	N/A - already in method
AR5: GWP-20	Methane	Elementary flows/emission/air	87	kg CO2e/kg	Missing elementary flow & 20 year GWP	aab83476-ec6c-3742-af85-15d320b7ce80
AR5: GWP-20	Methane	Elementary flows/Emission to air/high population density	87	kg CO2e/kg	20 year GWP	N/A - already in method
AR5: GWP-20	Methane	Elementary flows/Emission to air/low population density	87	kg CO2e/kg	20 year GWP	N/A - already in method

Method	Flow	Category	Factor	Unit	Change	UUID (if new)
AR5: GWP-20	Methane	Elementary flows/Emission to air/low population density, long-term	87	kg CO2e/kg	20 year GWP	N/A - already in method
AR5: GWP-20	Methane	Elementary flows/Emission to air/lower stratosphere + upper troposphere	87	kg CO2e/kg	20 year GWP	N/A - already in method
AR5: GWP-20	methane	Elementary flows/Emission to air/unspecified	87	kg CO2e/kg	20 year GWP	N/A - already in method
AR5: GWP-20	Methane	Elementary flows/emission/air	87	kg CO2e/kg	20 year GWP	N/A - already in method
AR5: GWP-20	Methane, biogenic	Elementary flows/Emission to air/high population density	86	kg CO2e/kg	20 year GWP	N/A - already in method

Method	Flow	Category	Factor	Unit	Change	UUID (if new)
AR5: GWP-20	Methane, biogenic	Elementary flows/Emission to air/low population density	86	kg CO2e/kg	20 year GWP	N/A - already in method
AR5: GWP-20	Methane, biogenic	Elementary flows/Emission to air/low population density, long-term	86	kg CO2e/kg	20 year GWP	N/A - already in method
AR5: GWP-20	Methane, biogenic	Elementary flows/Emission to air/lower stratosphere + upper troposphere	86	kg CO2e/kg	20 year GWP	N/A - already in method
AR5: GWP-20	Methane, biogenic	Elementary flows/Emission to air/unspecified	86	kg CO2e/kg	20 year GWP	N/A - already in method
AR5: GWP-20	Methane, fossil	Elementary flows/Emission to	87	kg CO2e/kg	20 year GWP	N/A - already in method

Method	Flow	Category	Factor	Unit	Change	UUID (if new)
		air/high population density				
AR5: GWP-20	Methane, fossil	Elementary flows/Emission to air/low population density	87	kg CO2e/kg	20 year GWP	N/A - already in method
AR5: GWP-20	Methane, fossil	Elementary flows/Emission to air/low population density, long-term	87	kg CO2e/kg	20 year GWP	N/A - already in method
AR5: GWP-20	Methane, fossil	Elementary flows/Emission to air/lower stratosphere + upper troposphere	87	kg CO2e/kg	20 year GWP	N/A - already in method
AR5: GWP-20	Methane, fossil	Elementary flows/Emission to air/unspecified	87	kg CO2e/kg	20 year GWP	N/A - already in method

Method	Flow	Category	Factor	Unit	Change	UUID (if new)
AR5: GWP-20	Nitrous oxide	Elementary flows/emission/air	268	kg CO2e/kg	Missing elementary flow & 20 year GWP	cfee0524-7ad6-300b-b050-6249135a2492
AR5: GWP-20	Nitrous Oxide	Elementary flows/Emission to air/unspecified	268	kg CO2e/kg	20 year GWP	N/A - already in method
AR5: GWP-20	Sulfur hexafluoride	Elementary flows/Emission to air/high population density	17500	kg CO2e/kg	20 year GWP	N/A - already in method
AR5: GWP-20	Sulfur hexafluoride	Elementary flows/Emission to air/low population density	17500	kg CO2e/kg	20 year GWP	N/A - already in method
AR5: GWP-20	Sulfur hexafluoride	Elementary flows/Emission to air/low population density, long-term	17500	kg CO2e/kg	20 year GWP	N/A - already in method

Method	Flow	Category	Factor	Unit	Change	UUID (if new)
AR5: GWP-20	Sulfur hexafluoride	Elementary flows/Emission to air/lower stratosphere + upper troposphere	17500	kg CO2e/kg	20 year GWP	N/A - already in method
AR5: GWP-20	Sulfur hexafluoride	Elementary flows/Emission to air/unspecified	17500	kg CO2e/kg	20 year GWP	N/A - already in method
AR4: GWP-20	Carbon dioxide	Elementary flows/emission/air	1	kg CO2e/kg	Missing elementary flow	b6f010fb-a764-3063-af2d-bcb8309a97b7
AR4: GWP-20	Dinitrogen monoxide	Elementary flows/Emission to air/high population density	289	kg CO2 eq/kg	20 year GWP	N/A - already in method
AR4: GWP-20	Dinitrogen monoxide	Elementary flows/Emission to air/low population density	289	kg CO2 eq/kg	20 year GWP	N/A - already in method

Method	Flow	Category	Factor	Unit	Change	UUID (if new)
AR4: GWP-20	Dinitrogen monoxide	Elementary flows/Emission to air/low population density, long-term	289	kg CO2 eq/kg	20 year GWP	N/A - already in method
AR4: GWP-20	Dinitrogen monoxide	Elementary flows/Emission to air/lower stratosphere + upper troposphere	289	kg CO2 eq/kg	20 year GWP	N/A - already in method
AR4: GWP-20	Dinitrogen monoxide	Elementary flows/Emission to air/unspecified	289	kg CO2 eq/kg	20 year GWP	N/A - already in method
AR4: GWP-20	Methane	Elementary flows/emission/air	72	kg CO2e/kg	Missing elementary flow & 20 year GWP	aab83476-ec6c-3742-af85-15d320b7ce80
AR4: GWP-20	Methane	Elementary flows/Emission to air/high population density	72	kg CO2 eq/kg	20 year GWP	N/A - already in method

Method	Flow	Category	Factor	Unit	Change	UUID (if new)
AR4: GWP-20	Methane	Elementary flows/Emission to air/low population density	72	kg CO2 eq/kg	20 year GWP	N/A - already in method
AR4: GWP-20	Methane	Elementary flows/Emission to air/low population density, long-term	72	kg CO2 eq/kg	20 year GWP	N/A - already in method
AR4: GWP-20	Methane	Elementary flows/Emission to air/lower stratosphere + upper troposphere	72	kg CO2 eq/kg	20 year GWP	N/A - already in method
AR4: GWP-20	methane	Elementary flows/Emission to air/unspecified	72	kg CO2 eq/kg	20 year GWP	N/A - already in method
AR4: GWP-20	Methane	Elementary flows/emission/air	72	kg CO2 eq/kg	20 year GWP	N/A - already in method

Method	Flow	Category	Factor	Unit	Change	UUID (if new)
AR4: GWP-20	Methane, biogenic	Elementary flows/Emission to air/high population density	72	kg CO2 eq/kg	20 year GWP	N/A - already in method
AR4: GWP-20	Methane, biogenic	Elementary flows/Emission to air/low population density	72	kg CO2 eq/kg	20 year GWP	N/A - already in method
AR4: GWP-20	Methane, biogenic	Elementary flows/Emission to air/low population density, long-term	72	kg CO2 eq/kg	20 year GWP	N/A - already in method
AR4: GWP-20	Methane, biogenic	Elementary flows/Emission to air/lower stratosphere + upper troposphere	72	kg CO2 eq/kg	20 year GWP	N/A - already in method

Method	Flow	Category	Factor	Unit	Change	UUID (if new)
AR4: GWP-20	Methane, biogenic	Elementary flows/Emission to air/unspecified	72	kg CO2 eq/kg	20 year GWP	N/A - already in method
AR4: GWP-20	Methane, fossil	Elementary flows/Emission to air/high population density	72	kg CO2 eq/kg	20 year GWP	N/A - already in method
AR4: GWP-20	Methane, fossil	Elementary flows/Emission to air/low population density	72	kg CO2 eq/kg	20 year GWP	N/A - already in method
AR4: GWP-20	Methane, fossil	Elementary flows/Emission to air/low population density, long-term	72	kg CO2 eq/kg	20 year GWP	N/A - already in method
AR4: GWP-20	Methane, fossil	Elementary flows/Emission to air/lower	72	kg CO2 eq/kg	20 year GWP	N/A - already in method

Method	Flow	Category	Factor	Unit	Change	UUID (if new)
		stratosphere + upper troposphere				
AR4: GWP-20	Methane, fossil	Elementary flows/Emission to air/unspecified	72	kg CO2 eq/kg	20 year GWP	N/A - already in method
AR4: GWP-20	Nitrous oxide	Elementary flows/emission/air	289	kg CO2e/kg	Missing elementary flow & 20 year GWP	cfee0524-7ad6-300b-b050-6249135a2492
AR4: GWP-20	Nitrous Oxide	Elementary flows/Emission to air/unspecified	289	kg CO2e/kg	Missing elementary flow & 20 year GWP	ffd60116-e6a8-4727-88df-a4f752a78e17
AR4: GWP-20	Sulfur hexafluoride	Elementary flows/Emission to air/high population density	16300	kg CO2 eq/kg	20 year GWP	N/A - already in method
AR4: GWP-20	Sulfur hexafluoride	Elementary flows/Emission to air/low population density	16300	kg CO2 eq/kg	20 year GWP	N/A - already in method

Method	Flow	Category	Factor	Unit	Change	UUID (if new)
AR4: GWP-20	Sulfur hexafluoride	Elementary flows/Emission to air/low population density, long-term	16300	kg CO2 eq/kg	20 year GWP	N/A - already in method
AR4: GWP-20	Sulfur hexafluoride	Elementary flows/Emission to air/lower stratosphere + upper troposphere	16300	kg CO2 eq/kg	20 year GWP	N/A - already in method
AR4: GWP-20	Sulfur hexafluoride	Elementary flows/Emission to air/unspecified	16300	kg CO2 eq/kg	20 year GWP	N/A - already in method
WC	Water	Elementary flows/Emission to water/unspecified	-1000	kg water/m3	Missing elementary flow	2404b41a-2eed-4e9d-8ab6-783946fdf5d6
WC	Water	Elementary flows/Emission to water/ocean	-1000	kg water/m3	Missing elementary flow	4f0f15b3-b227-4cdc-b0b3-6412d55695d5

Method	Flow	Category	Factor	Unit	Change	UUID (if new)
WC	Water	Elementary flows/Emission to water/ground water	-1000	kg water/m3	Missing elementary flow	51254820-3456-4373-b7b4-056cf7b16e01
WC	Water, fresh	Elementary flows/Resource/water/fresh water body	1	kg water/kg	Missing elementary flow	3a10ad4e-2c19-3be8-b199-249d7020bba1
WC	Water, fresh	Elementary flows/Resource/water/subterranean/fresh water body	1	kg water/kg	Missing elementary flow	5d717594-2c5c-394c-8eaf-9e9d2fd553fd
WC	Water, in air	Elementary flows/Resource/in air	1000	kg water/m3	Missing elementary flow	31417daa-cd7a-4920-9c73-708b68d494ad
WC	Water, saline	Elementary flows/Resource/water/saline water body	1	kg water/kg	Missing elementary flow	272e60cf-1e1f-3997-a93d-17f7698571e6
WC	Water, saline	Elementary flows/Resource/wat	1	kg water/kg	Missing elementary flow	dcffa66d-c69a-3b45-956c-915dcfe19995

Method	Flow	Category	Factor	Unit	Change	UUID (if new)
		er/subterranean/saline water body				
WC	Water, unspecified natural origin	Elementary flows/Resource/in ground	1000	kg water/m3	Missing elementary flow	478e8437-1c21-4032-8438-872a6b5ddcdf

APPENDIX 2
LIFE CYCLE INVENTORY

Appendix 2.2 – Scaling Factors

98% Capture Scaling Factors			
Parameter	**Unit**	**Scaling Factor**	**Reference**
CO2 Production	factor	1.032	[1]
Steam Demand	lb steam/lb CO2 captured	1.335	
Construction materials	factor	1.191	Derived from change in total CCS + compression CAPEX spending for 95 to 98% [1]
Cooling water makeup	factor	1.01	Communications with GEGP; 1% increase in cooling water demand
Amine consumption	factor	1.045	Communications with GEGP; 1.5 amine:1% capture rate

Appendix 2.3 Ecoinvent unit process modifications

New Name	Original Name	Inputs/ Outputs	Amount (NC = No Change)	Flow	New Provider	Original Provider
ethanolamine production | diethanolamine | Cutoff, U - modified to US - RNA	ethanolamine production | diethanolamine | Cutoff, U - RER	Inputs	NC	ammonia, anhydrous, liquid	market for ammonia, anhydrous, liquid | ammonia, anhydrous, liquid | Cutoff, U - RNA	market for ammonia, anhydrous, liquid | ammonia, anhydrous, liquid | Cutoff, U - RER
		Inputs	NC	chemical factory, organics	market for chemical factory, organics | chemical factory, organics | Cutoff, U - GLO	chemical factory construction, organics | chemical factory, organics | Cutoff, U - RER
		Inputs	NC	electricity, medium voltage	market for electricity, medium voltage | electricity, medium voltage | Cutoff, U - US-TRE	market group for electricity, medium voltage | electricity, medium voltage | Cutoff, U - RER
		Inputs	NC	ethylene oxide	market for ethylene oxide | ethylene oxide | Cutoff, U - RoW	market for ethylene oxide | ethylene oxide | Cutoff, U - RER
		Inputs	NC	heat, district or industrial, natural gas	market for heat, district or industrial, natural gas | heat, district or industrial, natural gas | Cutoff, U - modified to US - US-TRE	market group for heat, district or industrial, natural gas | heat, district or industrial, natural gas | Cutoff, U - RER

New Name	Original Name	Inputs/ Outputs	Amount (NC = No Change)	Flow	New Provider	Original Provider
		Inputs	NC	heat, from steam, in chemical industry	market for heat, from steam, in chemical industry | heat, from steam, in chemical industry | Cutoff, U - RoW	market for heat, from steam, in chemical industry | heat, from steam, in chemical industry | Cutoff, U - RER
		Inputs	NC	nitrogen, liquid	air separation, cryogenic | nitrogen, liquid | Cutoff, U - modified to US - US-TRE	market for nitrogen, liquid | nitrogen, liquid | Cutoff, U - RER
		Inputs	NC	tap water	market for tap water | tap water | Cutoff, U - CA-QC	market group for tap water | tap water | Cutoff, U - RER
		Outputs	NC	wastewater, average	market for wastewater, average | wastewater, average | Cutoff, U - modified to US - US	market for wastewater, average | wastewater, average | Cutoff, U - CH
		Outputs	NC	wastewater, average	market for wastewater, average | wastewater, average | Cutoff, U - modified to US - US	market for wastewater, average | wastewater, average | Cutoff, U - Europe without Switzerland
ammonia production, steam reforming, liquid | ammonia,	ammonia production, steam reforming, liquid | ammonia,	Inputs	NC	natural gas, high pressure	market for natural gas, high pressure | natural gas, high pressure | Cutoff, U - US	market for natural gas, high pressure | natural gas, high pressure | Cutoff, U - CA

New Name	Original Name	Inputs/ Outputs	Amount (NC = No Change)	Flow	New Provider	Original Provider
anhydrous, liquid | Cutoff, U - modified to US - RNA	anhydrous, liquid | Cutoff, U - RNA	Inputs	NC	heat, district or industrial, natural gas	heat production, natural gas, at boiler modulating >100kW | heat, district or industrial, natural gas | Cutoff, U - modified to US - US-SERC	heat production, natural gas, at boiler modulating >100kW | heat, district or industrial, natural gas | Cutoff, U - RoW
activated carbon production, granular from hard coal | activated carbon, granular | Cutoff, U - modified to US - RNA	activated carbon production, granular from hard coal | activated carbon, granular | Cutoff, U - RER	Inputs	NC	electricity, medium voltage	market for electricity, medium voltage | electricity, medium voltage | Cutoff, U - US-SERC	market group for electricity, medium voltage | electricity, medium voltage | Cutoff, U - RER
		Inputs	NC	hard coal	market for hard coal | hard coal | Cutoff, U - RNA	market for hard coal | hard coal | Cutoff, U - Europe, without Russia and Turkey
		Inputs	NC	heat, district or industrial, natural gas	market for heat, district or industrial, natural gas | heat, district or industrial, natural gas | Cutoff, U - modified to US - US-SERC	market group for heat, district or industrial, natural gas | heat, district or industrial, natural gas | Cutoff, U - RER
		Inputs	NC	industrial furnace, coal, 1-10MW	market for industrial furnace, coal, 1-10MW | industrial furnace, coal, 1-10MW | Cutoff, U - GLO	industrial furnace production, coal, 1-10MW | industrial furnace, coal, 1-10MW | Cutoff, U - RER

New Name	Original Name	Inputs/ Outputs	Amount (NC = No Change)	Flow	New Provider	Original Provider
		Inputs	NC	water, completely softened	market for water, completely softened | water, completely softened | Cutoff, U - US	market for water, completely softened | water, completely softened | Cutoff, U - RER
		Outputs	NC	hard coal ash	market for hard coal ash | hard coal ash | Cutoff, U - RoW	market for hard coal ash | hard coal ash | Cutoff, U - CH
polydimethylsiloxane production | polydimethylsiloxane | Cutoff, U - modified to US - RNA	polydimethylsiloxane production | polydimethylsiloxane | Cutoff, U - GLO	Inputs	NC	electricity, medium voltage	market for electricity, medium voltage | electricity, medium voltage | Cutoff, U - US-SERC	market group for electricity, medium voltage | electricity, medium voltage | Cutoff, U - GLO
		Inputs	NC	heat, district or industrial, natural gas	market for heat, district or industrial, natural gas | heat, district or industrial, natural gas | Cutoff, U - modified to US - US-SERC	market group for heat, district or industrial, natural gas | heat, district or industrial, natural gas | Cutoff, U - GLO
		Inputs	NC	heat, from steam, in chemical industry	market for heat, from steam, in chemical industry | heat, from steam, in chemical industry | Cutoff, U - RoW	market for heat, from steam, in chemical industry | heat, from steam, in chemical industry | Cutoff, U - RER

New Name	Original Name	Inputs/ Outputs	Amount (NC = No Change)	Flow	New Provider	Original Provider
		Inputs	NC	nitrogen, liquid	air separation, cryogenic | nitrogen, liquid | Cutoff, U - modified to US - US-SERC	market for nitrogen, liquid | nitrogen, liquid | Cutoff, U - RER
		Inputs	NC	nitrogen, liquid	air separation, cryogenic | nitrogen, liquid | Cutoff, U - modified to US - US-SERC	market for nitrogen, liquid | nitrogen, liquid | Cutoff, U - RoW
		Inputs	NC	tap water	market for tap water | tap water | Cutoff, U - CA-QC	market group for tap water | tap water | Cutoff, U - GLO
		Outputs	NC	wastewater, average	market for wastewater, average | wastewater, average | Cutoff, U - modified to US - US	market for wastewater, average | wastewater, average | Cutoff, U - CA-QC
		Outputs	NC	wastewater, average	market for wastewater, average | wastewater, average | Cutoff, U - modified to US - US	market for wastewater, average | wastewater, average | Cutoff, U - RoW
		Outputs	NC	wastewater, average	market for wastewater, average | wastewater, average | Cutoff, U - modified to US - US	market for wastewater, average | wastewater, average | Cutoff, U - Europe without Switzerland

New Name	Original Name	Inputs/ Outputs	Amount (NC = No Change)	Flow	New Provider	Original Provider
		Outputs	NC	wastewater, average	market for wastewater, average | wastewater, average | Cutoff, U - modified to US - US	market for wastewater, average | wastewater, average | Cutoff, U - CH
chlor-alkali electrolysis, membrane cell | sodium hydroxide, without water, in 50% solution state | Cutoff, U	chlor-alkali electrolysis, membrane cell | sodium hydroxide, without water, in 50% solution state | Cutoff, U - CA-QC	Inputs	NC	electricity, medium voltage	market for electricity, medium voltage | electricity, medium voltage | Cutoff, U - US-SERC	market for electricity, medium voltage | electricity, medium voltage | Cutoff, U - CA-QC
potassium carbonate production, from potassium hydroxide | potassium carbonate | Cutoff, U	potassium carbonate production, from potassium hydroxide | potassium carbonate | Cutoff, U - GLO	Inputs	NC	carbon dioxide, liquid	market for carbon dioxide, liquid | carbon dioxide, liquid | Cutoff, U - RoW	market for carbon dioxide, liquid | carbon dioxide, liquid | Cutoff, U - RER
		Inputs	NC	electricity, medium voltage	market for electricity, medium voltage | electricity, medium voltage | Cutoff, U - US-SERC	market group for electricity, medium voltage | electricity, medium voltage | Cutoff, U - GLO

New Name	Original Name	Inputs/ Outputs	Amount (NC = No Change)	Flow	New Provider	Original Provider
		Inputs	NC	heat, district or industrial, natural gas	market for heat, district or industrial, natural gas | heat, district or industrial, natural gas | Cutoff, U - modified to US - US-SERC	market group for heat, district or industrial, natural gas | heat, district or industrial, natural gas | Cutoff, U - GLO
		Inputs	NC	heat, from steam, in chemical industry	market for heat, from steam, in chemical industry | heat, from steam, in chemical industry | Cutoff, U - RoW	market for heat, from steam, in chemical industry | heat, from steam, in chemical industry | Cutoff, U - RER
		Inputs	NC	nitrogen, liquid	air separation, cryogenic | nitrogen, liquid | Cutoff, U - modified to US - US-SERC	market for nitrogen, liquid | nitrogen, liquid | Cutoff, U - RER
		Inputs	NC	nitrogen, liquid	air separation, cryogenic | nitrogen, liquid | Cutoff, U - modified to US - US-SERC	market for nitrogen, liquid | nitrogen, liquid | Cutoff, U - RoW
		Inputs	NC	tap water	market for tap water | tap water | Cutoff, U - CA-QC	market group for tap water | tap water | Cutoff, U - GLO

New Name	Original Name	Inputs/ Outputs	Amount (NC = No Change)	Flow	New Provider	Original Provider
		Outputs	NC	wastewater, average	market for wastewater, average | wastewater, average | Cutoff, U - modified to US - US	market for wastewater, average | wastewater, average | Cutoff, U - Europe without Switzerland
		Outputs	NC	wastewater, average	market for wastewater, average | wastewater, average | Cutoff, U - modified to US - US	market for wastewater, average | wastewater, average | Cutoff, U - CH
		Outputs	NC	wastewater, average	market for wastewater, average | wastewater, average | Cutoff, U - modified to US - US	market for wastewater, average | wastewater, average | Cutoff, U - RoW
		Outputs	NC	wastewater, average	market for wastewater, average | wastewater, average | Cutoff, U - modified to US - US	market for wastewater, average | wastewater, average | Cutoff, U - CA-QC
water production, ultrapure | water, ultrapure | Cutoff, U - modified to US - US-SERC	water production, ultrapure | water, ultrapure | Cutoff, U - CA-QC	Inputs	NC	electricity, medium voltage	market for electricity, medium voltage | electricity, medium voltage | Cutoff, U - US-SERC	market for electricity, medium voltage | electricity, medium voltage | Cutoff, U - CA-QC

New Name	Original Name	Inputs/ Outputs	Amount (NC = No Change)	Flow	New Provider	Original Provider
treatment of wastewater, average, wastewater treatment | wastewater, average | Cutoff, U	treatment of wastewater, average, wastewater treatment | wastewater, average | Cutoff, U - CA-QC	Inputs	NC	electricity, medium voltage	market for electricity, medium voltage | electricity, medium voltage | Cutoff, U - US-SERC	market for electricity, medium voltage | electricity, medium voltage | Cutoff, U - CA-QC
		Inputs	NC	heat, district or industrial, natural gas	market for heat, district or industrial, natural gas | heat, district or industrial, natural gas | Cutoff, U - modified to US - US-SERC	market for heat, district or industrial, natural gas | heat, district or industrial, natural gas | Cutoff, U - CA-QC
market for wastewater, average | wastewater, average | Cutoff, U - modified to US	market for wastewater, average | wastewater, average | Cutoff, U - CA-QC	Inputs	0.0738	sewer grid, rural	sewer grid construction, rural | sewer grid, rural | Cutoff, U - GLO	sewer grid construction, rural | sewer grid, rural | Cutoff, U - GLO
		Inputs	0.9262	sewer grid, urban	sewer grid construction, urban | sewer grid, urban | Cutoff, U - GLO	sewer grid construction, urban | sewer grid, urban | Cutoff, U - GLO
		Outputs	NC	wastewater, average	treatment of wastewater, average, wastewater treatment | wastewater, average | Cutoff, U - modified to US - US-SERC	treatment of wastewater, average, wastewater treatment | wastewater, average | Cutoff, U - CA-QC
air separation, cryogenic | nitrogen, liquid | Cutoff, U -	air separation, cryogenic | nitrogen,	Inputs	NC	electricity, medium voltage	market for electricity, medium voltage | electricity, medium voltage | Cutoff, U - US-SERC	market for electricity, medium voltage | electricity, medium voltage | Cutoff, U - CA-QC

New Name	Original Name	Inputs/ Outputs	Amount (NC = No Change)	Flow	New Provider	Original Provider
modified to US - US-SERC	liquid | Cutoff, U - CA-QC					
air separation, cryogenic | nitrogen, liquid | Cutoff, U - modified to US - US-TRE	air separation, cryogenic | nitrogen, liquid | Cutoff, U - CA-QC	Inputs	NC	electricity, medium voltage	market for electricity, medium voltage | electricity, medium voltage | Cutoff, U - US-TRE	market for electricity, medium voltage | electricity, medium voltage | Cutoff, U - CA-QC
heat production, natural gas, at boiler modulating >100kW | heat, district or industrial, natural gas | Cutoff, U - modified to US - US-SERC	heat production, natural gas, at boiler modulating >100kW | heat, district or industrial, natural gas | Cutoff, U - CA-QC	Inputs	NC	electricity, low voltage	market for electricity, low voltage | electricity, low voltage | Cutoff, U - US-SERC	market for electricity, low voltage | electricity, low voltage | Cutoff, U - CA-QC
		Inputs	NC	natural gas, high pressure	market for natural gas, high pressure | natural gas, high pressure | Cutoff, U - US	market for natural gas, high pressure | natural gas, high pressure | Cutoff, U - CA
heat production, natural gas, at boiler modulating >100kW	heat production, natural gas, at boiler modulating >100kW	Inputs	NC	electricity, low voltage	market for electricity, low voltage | electricity, low voltage | Cutoff, U - US-TRE	market for electricity, low voltage | electricity, low voltage | Cutoff, U - CA-QC

New Name	Original Name	Inputs/ Outputs	Amount (NC = No Change)	Flow	New Provider	Original Provider
| heat, district or industrial, natural gas | Cutoff, U - modified to US - US-TRE	| heat, district or industrial, natural gas | Cutoff, U - CA-QC	Inputs	NC	natural gas, high pressure	market for natural gas, high pressure | natural gas, high pressure | Cutoff, U - US	market for natural gas, high pressure | natural gas, high pressure | Cutoff, U - CA
heat production, natural gas, at industrial furnace >100kW | heat, district or industrial, natural gas | Cutoff, U - US-SERC	heat production, natural gas, at industrial furnace >100kW | heat, district or industrial, natural gas | Cutoff, U - CA-QC	Inputs	NC	electricity, low voltage	market for electricity, low voltage | electricity, low voltage | Cutoff, U - US-SERC	market for electricity, low voltage | electricity, low voltage | Cutoff, U - CA-QC
		Inputs	NC	natural gas, high pressure	market for natural gas, high pressure | natural gas, high pressure | Cutoff, U - US	market for natural gas, high pressure | natural gas, high pressure | Cutoff, U - CA
heat production, natural gas, at industrial furnace >100kW | heat, district or industrial,	heat production, natural gas, at industrial furnace >100kW | heat, district or industrial,	Inputs	NC	electricity, low voltage	market for electricity, low voltage | electricity, low voltage | Cutoff, U - US-TRE	market for electricity, low voltage | electricity, low voltage | Cutoff, U - CA-QC
		Inputs	NC	natural gas, high pressure	market for natural gas, high pressure | natural gas, high pressure | Cutoff, U - US	market for natural gas, high pressure | natural gas, high pressure | Cutoff, U - CA

New Name	Original Name	Inputs/ Outputs	Amount (NC = No Change)	Flow	New Provider	Original Provider
natural gas | Cutoff, U - US-TRE	natural gas | Cutoff, U - CA-QC					
market for heat, district or industrial, natural gas | heat, district or industrial, natural gas | Cutoff, U - modified to US - US-SERC	market for heat, district or industrial, natural gas | heat, district or industrial, natural gas | Cutoff, U - CA-QC	Inputs	N/A	heat, district or industrial, natural gas	deleted	heat production, natural gas, at industrial furnace low-NOx >100kW | heat, district or industrial, natural gas | Cutoff, U - CA-QC
		Inputs	0.32460	heat, district or industrial, natural gas	heat and power co-generation, natural gas, combined cycle power plant, 400MW electrical | heat, district or industrial, natural gas | Cutoff, U - US-SERC	heat production, natural gas, at boiler modulating >100kW | heat, district or industrial, natural gas | Cutoff, U - CA-QC
		Inputs	0.52240	heat, district or industrial, natural gas	heat production, natural gas, at industrial furnace >100kW | heat, district or industrial, natural gas | Cutoff, U - modified to US - US-SERC	heat production, natural gas, at industrial furnace >100kW | heat, district or industrial, natural gas | Cutoff, U - CA-QC

New Name	Original Name	Inputs/ Outputs	Amount (NC = No Change)	Flow	New Provider	Original Provider
		Inputs	0.15300	heat, district or industrial, natural gas	heat production, natural gas, at boiler modulating >100kW | heat, district or industrial, natural gas | Cutoff, U - modified to US - US-SERC	heat production, natural gas, at boiler condensing modulating >100kW | heat, district or industrial, natural gas | Cutoff, U - CA-QC
market for heat, district or industrial, natural gas | heat, district or industrial, natural gas | Cutoff, U - modified to US - US-TRE	market for heat, district or industrial, natural gas | heat, district or industrial, natural gas | Cutoff, U - CA-QC	Inputs	NC	heat, district or industrial, natural gas	deleted	heat production, natural gas, at industrial furnace low-NOx >100kW | heat, district or industrial, natural gas | Cutoff, U - CA-QC
		Inputs	0.32460	heat, district or industrial, natural gas	heat and power co-generation, natural gas, combined cycle power plant, 400MW electrical | heat, district or industrial, natural gas | Cutoff, U - US-TRE	heat production, natural gas, at boiler modulating >100kW | heat, district or industrial, natural gas | Cutoff, U - CA-QC
		Inputs	0.52240	heat, district or industrial, natural gas	heat production, natural gas, at industrial furnace >100kW | heat, district or industrial, natural gas | Cutoff, U - modified to US - US-TRE	heat production, natural gas, at industrial furnace >100kW | heat, district or industrial, natural gas | Cutoff, U - CA-QC

New Name	Original Name	Inputs/ Outputs	Amount (NC = No Change)	Flow	New Provider	Original Provider
		Inputs	0.15300	heat, district or industrial, natural gas	heat production, natural gas, at boiler modulating >100kW | heat, district or industrial, natural gas | Cutoff, U - modified to US - US-TRE	heat production, natural gas, at boiler condensing modulating >100kW | heat, district or industrial, natural gas | Cutoff, U - CA-QC

Wastewater			
Parameter	**Value [1]**	**Variable [2]**	
Population	331,002,656		
Population, urban	83%	% popU	
Sewerage rate, urban	95%	Sewu	
Sewerage rate, rural	36%	Sewr	
Fraction of sewered wastewater that is sewered in urban sewer	93%	% Su	Eq. 16.2 in [2]

1. WHO/UNICEF. (2021). "Estimates for drinking water, sanitation and hygiene services by country (2000-2020)". World Health Organization (WHO) and United Nations Children's Fund (UNICEF), Joint Monitoring Programme for Water Supply, Sanitation and Hygiene (WASH), July 2021. Available at https://washdata.org/data/downloads [Accessed July 4, 2023].

2. Doka G. (2021) A model for composition-specific life cycle inventories of regionalised wastewater fates. Doka Life Cycle Assessments, Zurich, Switzerland. Commissioned by Swiss Federal Office for the Environment (FOEN), Berne, Switzerland. Available at http://www.doka.ch/publications.htm

Heat			
Heat type	**Natural gas (Trillion Btu) [1]**	**%**	**Fraction**
Conventional boiler	823	15%	0.153002417
CHP and/or cogeneration	1,746	32%	0.32459565
Process heating	2,810	52%	0.522401933
	5,379	100%	1.00

1. US EIA. (2021). "2018 Manufacturing Energy Consumption Survey: Table 5.2." Available at https://www.eia.gov/consumption/manufacturing/ [Accessed July 5, 2023].

APPENDIX 3
RNG CALCULATIONS

RNG Calculations

The subsequent tables summarize the approach and assumptions for calculating the percentage of RNG to include in the fuel mix in Case 2 to achieve net zero upstream and direct emissions from the fuel.

Flow	Value	Units	
Baseline	**0%**	**RNG mass input**	
Mass Flows			
Baseline FNG Input	623,199,536	kg/yr	
	28,669,446,967,286	Btu/yr	
Emissions			
Emissions from NG (baseline)	404,144,805	kg CO2e/yr (w/ capture)	
NET Option	**21.742%**	**RNG mass input**	<<Using goal seek, select as "by changing cell"
Mass Flows			
Reduced FNG Input	487,703,807	kg/yr	
	22,436,150,243,943	Btu/yr	
RNG Input	135,495,729	kg/yr	
	6,233,296,723,344	Btu/yr	
Share of RNG energy input	21.742%		
Emissions			
Combustion emissons from FNG (98% capture) - fossil carbon	26,858,552	kg CO2e/yr (w/ capture)	
Combustion emissons from RNG (98% capture) - biogenic carbon	7,461,945	kg CO2e/yr (w/ capture)	
Upstream emissions from FNG	249,129,883	kg CO2e/yr	
Upstream emissions from RNG	(273,696,443)	kg CO2e/yr	
Total direct emissions not captured (ambient air concentrations)	9,753,936	kg CO2e/yr	<<Using goal seek, set "goal" to ambient air CO2e
% Reduced from NG combustion w/o capture	-99.43%		

Emission factors			
FNG - Upstream	5.11E-01	kgCO2e/kg FNG	See Appendix 2.
FNG - Combustion	2.75	kgCO2e/kg FNG	
RNG - Upstream	-2.02	kgCO2e/kg RNG	

Capture Efficiency	
95%	Baseline
98%	NET Option

Project Specific Emissions	95%		98%		
Component	Post-combustion flue gas	Post-capture flue gas	Post-combustion flue gas	Post-capture flue gas	Ambient air
	kg/yr	kg/yr	kg/yr	kg/yr	kg/yr
Total flow	16,567,987,211	14,645,550,116	16,567,987,211	14,645,550,116	14,645,550,116
CO2	1,716,007,425	85,800,709	1,716,007,425	34,320,497	9,226,697
Methane (CO2e)	0	0	0	0	527,240
CO2e	1,716,007,425	85,800,709	1,716,007,425	34,320,497	9,753,936

APPENDIX 4
LCIA RESULTS

Table 15. LCIA contribution analysis results.

Group	NGCC with 95% Capture					NGCC with 98% Capture and RNG				
	AR5 GWP-100	AR5 GWP-20	AR4 GWP-100	AR4 GWP-20	WC	AR5 GWP-100	AR5 GWP-20	AR4 GWP-100	AR4 GWP-20	WC
	kg CO2e	kg CO2e	kg CO2e	kg CO2e	L	kg CO2e	kg CO2e	kg CO2e	kg CO2e	L
FNG extraction, production, and delivery	8.25E+01	1.58E+02	6.62E+01	1.36E+02	-4.64E+01	6.58E+01	1.26E+02	5.28E+01	1.08E+02	-3.70E+01
RNG production and delivery	0.00E+00	0.00E+00	0.00E+00	0.00E+00	0.00E+00	3.95E+01	8.09E+01	3.06E+01	6.87E+01	3.32E-01
Direct	2.23E+01	2.23E+01	2.23E+01	2.23E+01	8.36E+02	9.16E+00	9.16E+00	9.16E+00	9.16E+00	8.64E+02
CO2 transport and storage	6.66E+00	6.94E+00	6.56E+00	6.81E+00	0.00E+00	6.99E+00	7.29E+00	6.90E+00	7.16E+00	0.00E+00
Construction	3.07E+00	4.41E+00	2.78E+00	4.02E+00	1.41E+02	3.56E+00	5.12E+00	3.22E+00	4.66E+00	1.65E+02
Electricity transmission and distribution	1.85E+00	1.38E+00	1.79E+00	1.28E+00	0.00E+00	1.85E+00	1.38E+00	1.79E+00	1.28E+00	0.00E+00
Consumables	1.40E+00	1.62E+00	1.36E+00	1.55E+00	3.40E+01	1.45E+00	1.67E+00	1.40E+00	1.60E+00	3.49E+01
Truck Transport	1.11E-01	1.19E-01	1.10E-01	1.16E-01	7.38E-02	1.16E-01	1.24E-01	1.15E-01	1.22E-01	7.71E-02

Group	NGCC with 95% Capture					NGCC with 98% Capture and RNG				
	AR5 GWP-100	AR5 GWP-20	AR4 GWP-100	AR4 GWP-20	WC	AR5 GWP-100	AR5 GWP-20	AR4 GWP-100	AR4 GWP-20	WC
	kg CO2e	kg CO2e	kg CO2e	kg CO2e	L	kg CO2e	kg CO2e	kg CO2e	kg CO2e	L
Water and wastewater treatment	7.57E-03	8.35E-03	7.40E-03	8.14E-03	8.92E-01	7.70E-03	8.50E-03	7.53E-03	8.29E-03	9.09E-01
Waste treatment	6.70E-04	7.60E-04	6.50E-04	7.30E-04	2.27E-03	6.80E-04	7.70E-04	6.60E-04	7.50E-04	2.32E-03
RNG avoided emissions	0.00E+00	0.00E+00	0.00E+00	0.00E+00	0.00E+00	-1.39E+01	-3.36E+01	-9.65E+00	-2.78E+01	0.00E+00
RNG biogenic uptake	0.00E+00	0.00E+00	0.00E+00	0.00E+00	0.00E+00	-9.79E+01	-9.79E+01	-9.79E+01	-9.79E+01	0.00E+00
Total	**1.18E+02**	**1.95E+02**	**1.01E+02**	**1.72E+02**	**9.66E+02**	**1.66E+01**	**1.00E+02**	**-1.59E+00**	**7.54E+01**	**1.03E+03**

Appendix WW

Technology Environmental Health and Safety Risk Assessment

Notes:

(1) Submitted to DOE on November 27, 2023

Executive Summary:

This Environmental Health and Safety (EHS) Assessment is being commissioned for the United States (U.S.) Department of Energy (DOE) Office of Fossil Energy and Carbon Management (FECM) under the DOE funded program DE-FE-0032131. The Principal Investigator (PI) for this project is John Sholes of GE Gas Power (GEGP), with support from Ramboll.

EHS is a hard science, and as such it should be caried out with rigorous methods, consistent boundary assumptions, and well-trained professionals to carry out the work. To this end GE Gas Power has elected to use Ramboll Americas Engineering Solutions and their team of EHS Registered Environmental Managers.

This technological review is focused on the incremental environmental and safety risks and benefits of the capture facility based on the proposed materials and process. Major concerns include solvents that are under increasing scrutiny by the U.S. Environmental Protection Agency (EPA) and National Institute for Occupational Safety and Health (NIOSH). Exposures to other chemical concerns will also be addressed, as appropriate. Unanticipated or uncontrolled environmental, health and safety (EH&S) risks will be evaluated so commercialization of Carbon Dioxide (CO_2) capture technologies will not impede project development and implementation.

Specific risk management strategies for the project coming out of this technological review include controls to protect human health, the environment, and ecological considerations for air emissions, water effluent, waste streams (including selection of a licensed waste incineration facility) and safe handling and protection measures for storage and handling of hazardous chemicals and toxic substances (including update of Toxic Release Inventory (TRI) reporting and Emergency Action Plans (EAPs) for the new chemical hazards present).

- The project will likely require a major modification of the existing air permit. New air modelling will need to be performed to address the amines and aldehydes reviewed in this technology review to demonstrate protection of the environment and human health.

- The project's basis of design stipulates the addition of biological treatment to support the reduction of pollutant loading that may be present to acceptable levels protective of the environment, and human and aquatic health. In preparation for permit application, best engineering judgement and/or vendor estimations will be required to be included within the permit modification package for Alabama Department of Environmental Management (ADEM's) consideration. The project will need to comply with appropriate pollutant mitigation technologies, which will be set through the permitting process.

- The project will generate hazardous waste in the form of spent activated carbon filters associated with treatment of the CO_2 absorber and potentially unused solvent. Both of these waste streams will require disposal via incineration. Appropriate vendors will need to be selected and identified as part of the next project phase.

- The project will need to share a Supplier Data Sheets (SDSs) regarding OASE blue®, antifoam, and sodium hydroxide. Training, labelling and inclusion of these chemical hazards will need to be included in worker safety and health plans. The project will also need to provide appropriate PPE and training for the handling of these chemical hazards. Further the project will need to continue TRI reporting and update the EAP to reflect the additions of these project components.

Failure Mode & Effects Analysis (FMEA)

FMEA's were conducted by GEGP on the Exhaust Gas Recirculation (EGR) system and the Carbon Capture and Sequestration (CCS) system. The combined FMEA is attached to the assessment.

The unmitigated risks were the risks that were identified before any engineering design modifications (i.e. mitigation actions) were implemented to reduce or illuminate those risks. The mitigated risks were the final review of those same risks after the engineering design changes were reviewed and implemented.

The FMEA is focused on the Risk of various failure modes, versus the cost and schedule to develop and implement solutions to address the failure. The Total risk level determination of Green, Yellow or Red is a combination of three factors: Probability of Occurrence; Impact (cost) on Program to correct if the Risk is realized; and Severity of risk if it manifests. The probability of Occurrence is either high (5) if >70% Uncertainty/Probability of occurring, Medium (3) if >30% but <70% Uncertainty/Probability of occurring, or Low (1) if less than 30% Uncertainty/Probability of occurring. The Impact is High (5) if the program cost/schedule to address is >$300k or >4 months, Medium (3) if program cost/schedule to address is >$50k but <$300k or >2 months but <4 months, and Low (1) if program cost/schedule to address is <$50k and >2 months. The severity of risk if it manifests is High © if invention or New Technology Invention (NTI) is required, Medium (B) if Major Hardware Modifications are required, or Low (A) if only minor hardware or software modifications are required. The resulting Total Risk Level is the product of the Probability Risk number times the Impact Risk number appended with the Severity/Consequence Level. As an Example, a Medium Risk Probability (3), combined with a High Risk Impact (5) and a Medium (B) Severity/Consequence (Major Hardware Moed required) results in a Total Risk Level of 15B. The resulting Total Risk Level is then categorized Red/Yellow/Green as shown in the following figure:

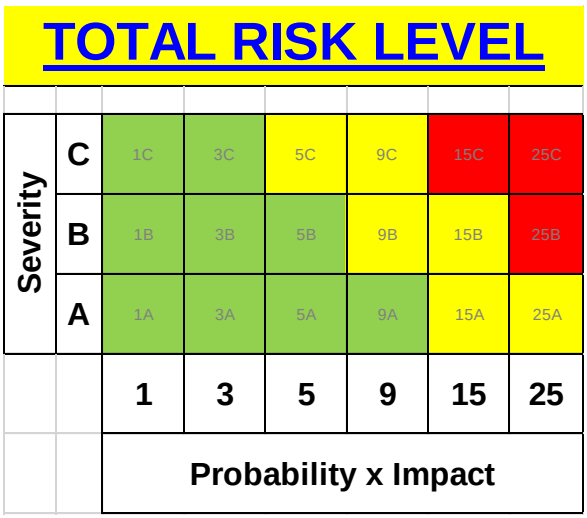

Summary of FMEA results:

Risks Assessed: 42 CCS + 35 EGR = 77 Total
Unmitigated risks assessed:

- Red Risks: 12 CCS + 10 EGR = 22 Total
- Yellow risks: 13 CCS + 20 EGR = 33 Total
- Green risks: 17 CCS + 5 EGR = 22 Total

Mitigated risks assessed:

- Red Risks: 0 CCS + 0 EGR = 0 Total (All Red Risks retired)
- Yellow risks: 6 CCS + 8 EGR = 14 Total
- Green risks: 36 CCS + 27 EGR = 63 Total

Work continues to reduce and retire these risks.

Prepared for

GE Gas Power

Prepared by

Ramboll Americas Engineering Solutions, Inc.

Project Number

1690030899

Date

Updated November 2023

TECHNOLOGY ENVIRONMENTAL HEALTH AND SAFETY RISK ASSESSMENT

BARRY PLANT, UNIT 6

BUCKS, ALABAMA

CONTENTS

		Page
1.	**INTRODUCTION**	**9**
1.1	Purpose	9
1.2	Scope of the Review	10
1.3	General Limitations	10
2.	**INVENTORY AND POTENTIAL HAZARDS**	**11**
2.1	Inventory	11
2.2	Potential Hazards	13
2.3	Potential Exposure Pathways	25
3.	**REGULATORY FRAMEWORK**	**27**
3.1	Regulatory Framework	27
3.1.1	Air Emissions	27
3.1.2	Wastewater and Stormwater Discharges	31
3.1.3	Hazardous Waste Management	32
3.1.4	Chemical Hazards and Toxic Substances	33
4.	**RISK MANAGEMENT**	**35**

TABLES

Table 1: Reviewed Emissions and Effluents 11
Table 2: Inventory Hazard Description 15
Table 3: Human Health Toxicity Screening Levels and Associated Health Effects 21
Table 4: Ecological Screening Levels for Surface Water 23

FIGURES

Figure 1: Plant Location with Floodplain Data 26

ACRONYMS AND ABBREVIATIONS

ADEM	Alabama Department of Environmental Management
AMP	2-Amino-2-methylpropanol
ATSDR	Agency for Toxic Substances and Disease Registry
BACT	Best Achievable Control Technology
CAA	Clean Air Act
Cal EPA	California Office of Environmental Health Hazard Assessment
CCS	Carbon Capture and Sequestration
CERCLA	Comprehensive Environmental Response and Liability Act of 1980
CFR	Code of Federal Regulations
CO_2	Carbon Dioxide
CO	Carbon Monoxide
CSAPR	Cross-State Air Pollution Rule
CWA	Clean Water Act
DGA	Diglycolamine
DOE	Department of Energy
EAP	Emergency Action Plan
EH&S	Environmental, Health and Safety
FEED	Front End Engineering Design
GEGP	GE Gas Power
GHG	Greenhouse Gas
HAP	Hazardous Air Pollutants
HHBP	Human Health Benchmarks for Pesticides
IRIS	Integrated Risk Information System
MACT	Maximum Achievable Control Technology
MDEA	Methyldiethanolamine
MEA	Monoethanolamine
MRL	Minimal Risk Levels
NA	Not Available
NESHAP	National Emission Standards for Hazardous Air Pollutants
NGGC	Natural Gas Combined Cycle
NIOSH	National Institute for Occupational Safety and Health

NNSR	Nonattainment New Source Review
NO_x	Nitrogen Oxides
NPDES	National Pollutant Discharge Elimination System
NETL	National Energy Technology laboratory
NSPR	New Source Performance Standards
OEHHA	Office of Environmental Health Hazard Assessment
OPP	Office of Pesticide Programs
ORO	Oak Ridge Operations Office
OSHA	Occupational Safety and Health Act
PCC	Post Combustion Capture
PEL	Permissible Exposure Level
PM	Particulate Matter
PPRTV	Provisional Peer Reviewed Toxicity Values
PRG	Preliminary Remediation Goals
PSD	Prevention of Significant Deterioration
PZ	Piperazine
RAIS	Risk Assessment Information System
RCRA	Resource Conservation and Recovery Act
RME	Reasonable Maximum Exposure
SARA	Superfund Amendments and Reauthorization Act
SDS	Safety Data Sheet
SO_2	Sulfur Dioxide
STSC	Superfund Health Risk Technical Support Center
TRI	Toxic Release Inventory
TSCA	Toxic Substance and Control Act
TWA	Time Weighted Average
UCOR	URS | CH2M Oak Ridge LLC
USEPA	United States Environmental Protection Agency

1. INTRODUCTION

1.1 Purpose

GE Gas Power (GEGP), in connection with Linde, Kiewit Engineering, and Southern Company, are preparing a deliverable as a part of GEGP's ongoing Front End Engineering Design (FEED) Study "Retrofittable Advanced Combined Cycle Integration for Flexible Decarbonized Generation" awarded under Department of Energy's (DOE's) Funding Opportunity Announcement No.: DE-FOA-0002515.

GEGP, with partners, is planning for the installation of a carbon capture and sequestration (CCS) facility that will be integrated into an existing natural gas combined cycle (NGCC) unit at a power plant located in the Gulf Coast region, specifically Plant Barry, Block 6, in Bucks, Alabama. The NGCC unit will be modified with certain equipment upgrades to improve efficiency and to accommodate the integration of a CCS facility. The integrated NGCC/CCS facility will be designed under the FEED study.

The project will take place at the James M. Barry Electric Generating Plant.

A new carbon dioxide (CO_2) pipeline will also be built to transfer captured carbon to a sequestration facility located offsite.

GEGP was awarded the FEED study in February of 2022 and the FEED study is scheduled to be completed in December 2023, including this initial Technological Environmental, Health and Safety (EH&S) Risk Assessment Report.

Natural gas power plants are essential in the energy transition in support of adding more renewable energy to the grid. Natural gas is still a producer of carbon emissions. GEGP is aiming to unlock ways to decarbonize gas-fired power plants. CCS is a tactic to capture CO_2 and trap it safely underground or reuse the gas in the making of other products. The project will explore ways to lower the cost of CCS while reducing CO_2 emissions from natural gas power plants by up to 95%. The DOE funding aims to further

the goal of net-zero carbon emissions by 2050 and a 100% clean electricity sector by 2035. CCS is critical to curtailing greenhouse gas emissions from power plants to achieve net-zero goals.

1.2 Scope of the Review

This technological review is focused on the incremental environmental and safety risks and benefits of the capture facility based on the proposed materials and process. Major concerns include solvents that are under increasing scrutiny by the U.S. Environmental Protection Agency (EPA)I and National Institute for Occupational Safety and Health (NIOSH). Exposures to other chemical concerns will also be addressed, as appropriate. Unanticipated or uncontrolled environmental, health and safety (EH&S) risks will be evaluated so commercialization of CO_2 capture technologies will not impede project development and implementation.

1.3 General Limitations

In performing its assignment, Ramboll must rely upon publicly available information, information provided by the client and information provided by third parties. Accordingly, the conclusions in this report are valid only to the extent that the information provided to Ramboll was accurate and complete. Further, the solvent proposed is proprietary in nature and certain aspects of the safety data sheet were redacted, including the names of chemical hazards. Conversations with the GEGP team and literature research were used to fill the gap.

2. INVENTORY AND POTENTIAL HAZARDS

2.1 Inventory

GEGP intends to decarbonize its NGCC power plant (Alabama Power's James M. Barry Electric Generating Plant, Unit 6 in Bucks, Alabama) with a post combustion capture (PCC) plant, to reduce the CO_2 footprint of this asset. CO_2 is generated from the combustion of natural gas to generate electricity. Following combustion, the wet flue gas is pre-treated, CO_2 is absorbed using an amine solvent (OASE blue®), and CO_2 is regenerated and compressed in multiple stages. Captured and compressed CO_2 is transported off-site via a pipeline and sequestered. The PCC will be designed to achieve 95% CO_2 capture.

The incidental emissions and effluents shown in Table 1 were review as part of this technical review.

Table 1: Reviewed Emissions and Effluents

Inventory	Notes	Air Emission	Water Emission	Waste Emission
OASE blue® (amine solvent)	Propriety amine-based solvent input	X	X	X
DEA	Proxy for proprietary amine-based solvent	X	X	X
PZ	Proxy for proprietary amine-based solvent	X	X	X
Sodium Hydroxide (NaOH)	Input	X		
Antifoam	Input	X	X	X
Formaldehyde	By-product (from capture solvent)	X	X	
Acetaldehyde	By-product (from capture solvent)	X	X	

Table 1: Reviewed Emissions and Effluents

Inventory	Notes	Air Emission	Water Emission	Waste Emission
Acetophenone	By-product (from capture solvent)	X	X	
Isophorone	By-product (from capture solvent)	X	X	
Propionaldehyde	By-product (from capture solvent)	X	X	
Amines	By-product (from capture solvent)	X	X	
Nitrosamines	By-product (from capture solvent)	X	X	

Based on engineering analysis provided, a brief description of the anticipated sources of the above chemical inventory is provided below:

- Amine Solvent
    - Tanks – minor emissions to the air during tank loading
    - Treated flue gas – trace emissions to the air
    - Process condensate – trace amount into wastewater effluent
    - Slop vessel – minor emissions during shutdown or maintenance activities
    - CO_2 Compressor, Chiller, and Reclaimer Units – minor amounts of amine in wastewater effluent
    - Stormwater – if detected, directed to wastewater system
    - Unused solvent – unanticipated, but would be handled as a waste
    - Activated carbon filter – collected in carbon filter and managed as a waste
- Sodium Hydroxide
    - Tanks – minor emissions to the air during tank loading
- Antifoam

- Stormwater – if detected, directed to wastewater system
- Activated carbon filter – collected in carbon filter and managed as a waste

- Aldehydes
  - Treated flue gas – trace emissions to the air
  - CO_2 Compressor, Chiller, and Reclaimer Units – minor amounts of aldehydes in wastewater effluent
  - Expected values of 0.9 ppmvd (2.0 mg/Nm3 dry, 15%O2) (as acetaldehyde)
- Amines
  - Treated flue gas – trace emissions to the air
  - CO_2 Compressor, Chiller, and Reclaimer Units – minor amounts of amines in wastewater effluent
  - Expected values of 0.8 ppmvd (2.5 mg/Nm3 dry, 15%O2) (as acetamide)
- Nitroamines
  - Treated flue gas – trace emissions to the air
  - CO_2 Compressor, Chiller, and Reclaimer Units – minor amounts of aldehydes in wastewater effluent
  - Expected values of 0.00052 ppmvd (0.0030 mg/Nm3 dry, 15%O2) (as n-nitosomorpholine)

2.2 Potential Hazards

Using the inventory developed in Task 1.1, a list of hazard descriptions was developed including information regarding the volatility, flammability, explosivity, corrosivity, and potential hazardous reactivities. Since the project is modifying an existing operation, any information on the hazards of the chemicals that could be taken from safety data sheets (SDSs) would be ideal; however, the only SDS provided by Linde/BASF was for OASE blue® and all of the toxicity levels and composition data in the SDS was redacted. The Host site will need SDS prior to final commitment to proceed,, but that will require a

contract with BASF to receive which is beyond the scope of this FEED study. If the Host decides to proceed, an appropriate contract will be signed with BASF at that time.

Limited information regarding hazard descriptions and no toxicity information was available for OASE blue®; however, according to the DOE National Energy Technology laboratory (NETL), OASE blue® is a proprietary amine-based solvent developed for post-combustion CO_2 capture that likely consists of a combination of primary/secondary/tertiary/hindered amines and activators (heterocycles, primary or secondary alkanolamines, alkylenediamines or polyamines) (DOE 2015). The most commonly used amines for carbon capture include monoethanolamine (MEA), methyldiethanolamine (MDEA), 2-Amino-2-methylpropanol (AMP), diglycolamine (DGA), diethanolamine (DEA), and piperazine (PZ) (DOE 2015). Of these amines, PZ has been recommended by DOE as a proxy for OASE blue®; however, a review of the available information indicates there is limited data on potential hazards and health effects following exposure to PZ and therefore, toxicity values are not available for PZ. In a discussion with GEGP, DEA is also believed to be most representative of OASE blue®, while MDEA and MEA are considered to be least like OASE blue®. Unlike PZ, information on potential hazards, health effects and toxicity values are available for DEA. Therefore, while PZ is one potential proxy amine for OASE blue®, due to the limited toxicity data for PZ, information on potential hazards, health effects and toxicity values for DEA are also presented.

Except for the information for OASE blue®, which was from the provided SDS, the information presented in Table 2 was retrieved from the National Library of Medicine's National Center for Biotechnology Information PubChem database which is available at: https://pubchem.ncbi.nlm.nih.gov/. If no data were available from PubChem, additional google searches were conducted to identify any missing information. Any information sources identified are footnoted in Table 2.

Table 2: Inventory Hazard Description

Chemical and CAS Number	Corrosivity	Flammability	Combustibility	Volatility	Stability and Reactivity
Antifoam	NA	NA	NA	NA	NA
OASE blue® (amine solvent)[b]	Not corrosive	Not highly flammable/ Not explosive	NA	NA	**Solubility in Water:** Soluble **Possibility of hazardous reactions**: Evolution of heat under influence of acids. **Conditions to avoid:** Avoid freezing. Avoid extreme heat. **Incompatible materials:** Acids, Nitrosating agents. **Hazardous decomposition products:** Possible thermal decomposition products: carbon monoxide, carbon dioxide, ammonia, anhydrous nitrogen oxides, carbon oxides
Piperazine (PZ)	Corrosive	Flammable	Combustible	Volatile	**Air and Water Reactions:** Water soluble. **Reactive Group:** Amines, Phosphines, and Pyridines **Hazardous Reactivities & Incompatibilities:** Violent reaction with strong oxidizers and dicyanofurazan. Incompatible with nitrogen compounds, carbon tetrachloride. Attacks aluminum, copper, nickel, magnesium, and zinc.
Diethanolamine (DEA) - (2,2'-Iminobisethanol) 111-42-2	Corrosive	Flammable	Combustible	Volatile	**Air and Water Reactions:** Water soluble. **Reactive Group:** Alcohols and Polyols Amines, Phosphines, and Pyridines **Hazardous Reactivities & Incompatibilities:** Oxidizers, strong acids, acid anhydrides, halides [Note: Reacts with CO_2 in the air. Hygroscopic (i.e., absorbs moisture from the air). Corrosive to copper, zinc, & galvanized iron].
Sodium Hydroxide 1310-73-2	Very corrosive	Contact with moisture or water may generate sufficient heat to ignite combustible materials. Risk of fire and explosion on contact with incompatible substances.	Non-combustible. Contact with moisture or water may generate sufficient heat to ignite combustible materials.	Non-volatile	**Air and Water Reactions:** Soluble in water. Dissolution can liberate enough heat to cause steaming and spattering and ignite adjacent combustible material. **Reactive Group:** Bases, Strong **Reactivity Alert:** Water-Reactive **Hazardous Reactivities & Incompatibilities:** Water; acids; flammable liquids; organic halogens; metals such as aluminium, tin & zinc; nitromethane

Table 2: Inventory Hazard Description

Chemical and CAS Number	Corrosivity	Flammability	Combustibility	Volatility	Stability and Reactivity
Formaldehyde 50-00-0	Corrosive	Extremely Flammable. Gas/air mixtures are explosive. Risk of explosion on contact with strong oxidants, acids, or bases.	Combustible. May be ignited by heat, sparks, or flames	Volatile	**Air and Water Reactions:** No rapid reaction with air. No rapid reaction with water. **Reactive Group:** Aldehydes and Polymerizable Compounds **Reactivity Alert:** Peroxidizable Compound **Hazardous Reactivities & Incompatibilities:** Strong oxidizers, alkalis & acids; phenols; urea [Note: Pure formaldehyde has a tendency to polymerize. Reacts with hydrochloric acid to form bis-chloromethyl ether.]
Acetaldehyde 75-07-0	Corrosive	Highly flammable. Easily oxidized by air to form unstable peroxides which may explode. Forms explosive mixture with air above 100 °C (30-60% of the vapor in air) owing to formation of peroxyacetic acid.	Combustible	Volatile	**Air and Water Reactions:** Soluble in water. **Reactive Group:** Aldehydes and Polymerizable Compounds **Reactivity Alert:** Highly Flammable, Polymerizable, Peroxidizable Compound **Hazardous Reactivities & Incompatibilities:** Strong oxidizers, acids, bases, alcohols, ammonia & amines, phenols, ketones, hydrogen cyanide, hydrogen sulfide
Acetophenone 98-86-2	Not corrosive	Highly flammable	Combustible	Volatile	**Air and Water Reactions:** Slightly soluble in water. **Reactive Group:** Ketones **Hazardous Reactivities & Incompatibilities:** Strong oxidizers, strong bases, and strong reducing agents
Isophorone 78-59-1	Not corrosive	Flammable and explosive when exposed to heat or flame.	Combustible	Volatile	**Air and Water Reactions:** Insoluble in water **Reactive Group:** Ketones and Hydrocarbons (Aliphatic unsaturated) **Reactivity Alert:** Peroxidizable Compound **Hazardous Reactivities & Incompatibilities:** Oxidizers, strong alkalis, amines.
Propionaldehyde 123-38-6	Corrosive	Highly flammable. Vapour/air mixtures are explosive.	Combustible	Volatile	**Air and Water Reactions:** Highly flammable. Soluble in water. **Reactive Group:** Aldehydes and Polymerizable Compound **Reactivity Alert:** Highly Flammable, Polymerizable, Peroxidizable Compound **Hazardous Reactivities & Incompatibilities:** Reacts vigorously with oxidizing materials. Incompatible with strong acids, amines. Violent reaction with strong oxidizers. Strong caustics, reducing agents can cause explosive polymerization. Can self-ignite if finely dispersed on porous or combustible material such as fabric. Heat or ultraviolet can cause decomposition.

Table 2: Inventory Hazard Description

Chemical and CAS Number	Corrosivity	Flammability	Combustibility	Volatility	Stability and Reactivity

Notes:

[a]Data retrieved from the National Library of Medicine's National Center for Biotechnology Information PubChem database. Available at: https://pubchem.ncbi.nlm.nih.gov/

[b] Information for OASE blue was obtained from the provided MSDS.

[c] ERCO Worldwide Material Safety Data Sheet (https://www.ercoworldwide.com/wp-content/uploads/MSDS-Sodium-Hydroxide-Solution-Rev-41.pdf

The human health cancer and noncancer toxicity screening levels for both air and water with the associated health effects are presented in Table 3. The screening values presented in Table 3 are preliminary remediation goals (PRGs) derived by the Oak Ridge National laboratory's Risk Assessment Information System (RAIS) (https://rais.ornl.gov/cgi-bin/tools/TOX_search?select=chemtox). RAIS began in 1996 under the DOE's Oak Ridge Operations Office (ORO) to provide all risk assessment processes in a transparent forum for the public, subcontractors and State and Federal regulators. DOE's clean-up contractor, URS | CH2M Oak Ridge LLC (UCOR), continues to support the RAIS to maintain the information and to update databases and tools based on new Guidance. RAIS supports environmental restoration activities for the ORO, as well as providing up to date databases and tools to users from multiple state and federal agencies and over 60 countries.

The PRGs available from RAIS are chemical-specific concentrations for contaminants in air and water that may warrant further investigation and are based on default exposure parameters and factors that represent Reasonable Maximum Exposure (RME) conditions for long-term/chronic exposures. The PRGs are estimated based on the method outlined in EPA's Risk Assessment Guidance for Superfund, Part B Manual (EPA 1991) and Soil Screening Guidance documents (EPA 1996 and 2002). The sources of the cancer and noncancer toxicity values used to derive the PRGs in the RAIS database are identified based on a hierarchy system as follows:

- EPA's Integrated Risk Information System (IRIS) (https://www.epa.gov/iris)
- Provisional Peer Reviewed Toxicity Values (PPRTVs) derived by EPA's Superfund Health Risk Technical Support Center (STSC) for the EPA Superfund program. (https://hhpprtv.ornl.gov/)
- Human Health Benchmarks for Pesticides (HHBPs) derived by EPA's Office of Pesticide Programs (OPP) (https://ordspub.epa.gov/ords/pesticides/f?p=HHBP:home)
- Agency for Toxic Substances and Disease Registry (ATSDR) minimal risk levels (MRLs) (https://www.atsdr.cdc.gov/mrls/index.html)

- California Environmental Protection Agency Office of Environmental Health Hazard Assessment (OEHHA) toxicity values for the State of California (https://oehha.ca.gov/)
- PPRTV Appendix Screening values
- EPA Superfund program's Health Effects Assessment Summary Table (https://epa-heast.ornl.gov/)

Values that are withdrawn from IRIS, archived from a PPRTV, draft or withdrawn from ATSDR, archived from a PPRTV screening value, or archived from HEAST.

As noted previously, limited information regarding hazard descriptions and toxicity was available for the recommended proxy for OASE blue®, piperazine. No long term/chronic human health cancer and noncancer toxicity values were available for PZ from RAIS or any other authoritative or regulatory source. PZ is unstable in air and is unlikely to result in exposures beyond the point source (Health Canada 2021). When emitted to air, PZ is rapidly photolyzed with a half-life of approximately 0.8 hours (EU 2005). Therefore, long term inhalation toxicity information is not available for PZ and due to the corrosive and irritating properties of PZ it is not likely that anyone would remain in an area of high PZ concentration for long periods of time. Occupational exposure levels have been established for piperazine dihydrochloride, a salt of PZ. The NIOSH has established a recommended exposure limit (REL) time weighted average (TWA) of 5 mg/m^3 (NIOSH 2019; https://www.cdc.gov/niosh/npg/npgd0517.html).

In water, PZ is hydrolytically stable under environmental conditions; therefore, there is a potential for long term exposure to PZ in water (EU 2005). No oral long term/chronic cancer and noncancer toxicity values were identified for PZ. Health Canada (2021) and the European Chemicals Bureau (EU 2005) have conducted risk assessments for PZ, both noting oral studies in humans and animals. EU (2005) reported a LOAEL of 30 mg/kg/day based on neurological effects in human patients treated orally with PZ for 3 to 7 days. In rats, oral doses of 300 mg/kg/day and higher resulted in

adverse effects on fertility (EU 2005). Therefore, while PZ was recommended as the proxy for OASE blue®, there are no available toxicity values developed by authoritative bodies for PZ that could be used as screening values. However, the LOAEL of 30 mg/kg bw/day (1.0x10+6 µg/L)[1], based on neurological effects reported in humans used in the margin of exposure estimates for the EU (2005) could be relied upon as a conservative screening value for PZ comparable to approaches used by Health Canada and EU. Human health toxicity screening levels and associated health effects information for DEA are available and are also presented in Table 3. In the absence of toxicity values for PZ, or any other chemical structurally similar to PZ, the screening levels for DEA presented in Table 3 could also be used as a proxy for OASE blue®.

[1] Drinking water concentration was estimated using the average human body weight of 70 kg and average daily water consumption of 2 L/day.

Table 3: Human Health Toxicity Screening Levels and Associated Health Effects

Chemical	Air						Water			
	Carcinogenic Screening Levels			Non-Carcinogenic Screening Levels			Carcinogenic Screening Levels		Non-Carcinogenic Screening Levels	
	Resident Air (ug/m^3)	Industrial Air (ug/m^3)	Health Effect	Resident Air (ug/m^3)	Industrial Air (ug/m^3)	Health Effect	Residential Tap Water (ug/L)	Health Effect	Residential Tap Water (ug/L)	Health Effect
Antifoam	NA	NA	NA	NA	NA	NA	NA	NA	NA	NA
OASE blue®	NA	NA	NA	NA	NA	NA	NA	NA	NA	NA
Sodium Hydroxide	NA	NA	NA	NA	NA	NA	NA	NA	NA	NA
Formaldehyde	2.2x10-1	9.4x10-1	aSystem: Respiratory Basis: Squamous cell carcinoma	1.0x10+1	4.3x10+1	bSystem: Respiratory Basis: Mild irritation of the eyes and upper respiratory tract and mild damage to nasal epithelium.	3.9x10-1	cSystem: Respiratory Basis: Nasal squamous carcinoma	2.0x10+1	aSystem: Urinary, gastrointestinal, other Basis: Reduced weight gain, histopathology
Acetaldehyde	1.3	5.6	aSystem: Respiratory Basis: Nasal squamous cell carcinoma or adenocarcinoma	9.4	3.9x10+1	aSystem: Nervous, Respiratory Basis: Degeneration of olfactory epithelium	2.6	aSystem: Respiratory Basis: Nasal squamous cell carcinoma or adenocarcinoma	1.9x10+1	aSystem: Nervous, Respiratory Basis: Degeneration of olfactory epithelium
Acetophenone	NA	NA	NA	NA	NA	NA	NA	NA	1.9x10+3	aSystem: Other Basis: General toxicity
Isophorone	NA	NA	NA	2.1x10+3	8.8x10+3	cSystem: Reproductive Basis: Develop-mental effects; hepatocytomegaly and coagulative necrosis of the liver	7.8x10+1	aSystem: Reproductive Basis: Preputial gland carcinoma	3.8x10+3	aSystem: Urinary Basis: Kidney pathology
Propionaldehyde	NA	NA	NA	8.3	3.5x10+1	aSystem: Nervous, Respiratory Basis: Atrophy of olfactory epithelium	NA	NA	1.7x10+1	aSystem: Nervous, Respiratory Basis: Atrophy of olfactory epithelium
Diethanolamine (DEA)	NA	NA	NA	2.1x10-1	8.8x10-1	dSystem: Gastrointestinal Basis: Increased incidence of squamous metaplasia	NA	NA	4.0x10+1	dSystem: Urinary Basis: Significant reduction in relative kidney weight
Piperazine (PZ)	NA	NA	NA	NA	5 mg/m^{3e}		NA	NA	2.1x10+5^f	NA

Chemical	Air						Water			
	Carcinogenic Screening Levels			Non-Carcinogenic Screening Levels			Carcinogenic Screening Levels		Non-Carcinogenic Screening Levels	
	Resident Air (ug/m^3)	Industrial Air (ug/m^3)	Health Effect	Resident Air (ug/m^3)	Industrial Air (ug/m^3)	Health Effect	Residential Tap Water (ug/L)	Health Effect	Residential Tap Water (ug/L)	Health Effect
Antifoam	NA	NA	NA	NA	NA	NA	NA	NA	NA	NA
OASE blue®	NA	NA	NA	NA	NA	NA	NA	NA	NA	NA
Sodium Hydroxide	NA	NA	NA	NA	NA	NA	NA	NA	NA	NA

Notes:

NA = No information available

a Health Effects information based on IRIS database.

b Health Effects information based on ATSDR database.

c Health Effects information based on California Office of Environmental health hazard assessment (Cal EPA) database.

d Health Effects information based on EPA's Provisional Peer-Reviewed Toxicity Values (PPRTV -) database.

e NIOSH 2019 (https://www.cdc.gov/niosh/npg/npgd0517.html)

f LOAEL of 30 mg/kg bw/day (1.0x10+6 µg/L; estimated using the average human body weight of 70 kg and average daily water consumption of 2 L/day.), based on neurological effects reported in humans used in the margin of exposure estimates for the EU (2005).

Table 4 presents the ecological screening levels for the identified substances. These screening levels were obtained from the Oak Ridge National laboratory's RAIS (https://rais.ornl.gov/cgi-bin/tools/TOX_search?select=chemtox) ecological benchmark tool for chemicals. The ecotoxicity benchmarks available from RAIS are from national, state, and international agencies. When searching the RAIS database, multiple benchmark levels from different sources were available. For this assessment, regional EPA ecological screening levels were chosen. If no EPA screening level was available, then a state screening level was chosen. Ecological screening levels were available for formaldehyde, acetaldehyde, acetophenone, and isophorone. For the remaining chemicals, the EPA ECOTOX database was searched. The ECOTOX database is a comprehensive knowledgebase providing single chemical environmental toxicity data on aquatic and terrestrial species. From the information available from the database, the most appropriate freshwater values were chosen as screening levels.

Table 4: Ecological Screening Levels for Surface Water

Chemical	Benchmark	Organism	Screening Level	Units	Source
Antifoam	NA	NA	NA	NA	NA
OASE blue	NA	NA	NA	NA	NA
Sodium Hydroxide[a]	Freshwater LC50	Water Flea	50	mg/L	EPA ECOTOX Database
	Freshwater EC50	Water Flea	40.38	mg/L	EPA ECOTOX Database
Formaldehyde[b]	Chronic Freshwater (March 2018)	Not specified	0.18	mg/L	EPA Region 4
	Acute Freshwater (March 2018)	Not specified	0.79	mg/L	EPA Region 4
Acetaldehyde[b]	Acute Freshwater (March 2018)	Not specified	1.2	mg/L	EPA Region 4

Chemical	Benchmark	Organism	Screening Level	Units	Source
	Chronic Freshwater (March 2018)	Not specified	0.13	mg/L	EPA Region 4
Acetophenone	Freshwater and Marine Water Contaminant Cleanup (2005)	Not specified	7.8	mg/L	Florida
Isophorone[b]	Acute Freshwater (March 2018)	Not specified	7.5	mg/L	EPA Region 4
	Chronic Freshwater (March 2018)	Not specified	0.92	mg/L	EPA Region 4
Propionaldehyde[a]	Freshwater LC50	Bluegill fish	130	mg/L	EPA ECOTOX Database
	Freshwater EC50	Green algae	11.38	mg/L	EPA ECOTOX Database
Piperazine (PZ)[c]	Freshwater EC50	Water Flea	21	mg/L	EU (2005)
	Freshwater NOEC	Fish and algea	1000	mg/L	EU (2005)

NA = No information available

EC50 = The median effective concentration of a substance in an environmental medium expected to produce a certain effect in 50% of test organisms in a given population under a defined set of conditions.

LC50 = The concentration of a substance in water causing a death (50% of the tested population) to aquatic life.

NOEC = No Observable Effect Concentration

a Screening level obtained from ECOTOX is a comprehensive Knowledgebase providing single chemical environmental toxicity data on aquatic and terrestrial species.

b Screening level obtained from the Oak Ridge National laboratory's RAIS (https://rais.ornl.gov/cgi-bin/tools/TOX_search?select=chemtox) ecological benchmark tool for chemicals

c Screening level reported in EU (2005) Piperazine CAS NO. 110-85-0 Summary Risk Assessment Report. European Commission Institute for Health and Consumer Protection, European Chemicals Bureau.

2.3 Potential Exposure Pathways

Ramboll assessed the direct emission points and potential exposure pathways to humans, wildlife, and protected plants/crops.

Workers may potentially be exposed while handling, loading, and working around these chemical hazards. The two primary pathways for exposure to people and wildlife outside of the plant are through air emissions and the wastewater effluent discharge.

Bucks, Alabama is a small unincorporated community with fewer than 50 fulltime residents (Bucks, AL | Data USA). The area is in attainment for criteria air pollutants (https://www3.epa.gov/airquality/greenbook/ancl.html). The nearest residential housing area is over two miles from the site. The plant will lie along the west bank of the Mobile River, which is the source of colling water and also the discharge point for wastewater effluent (Figure 1).

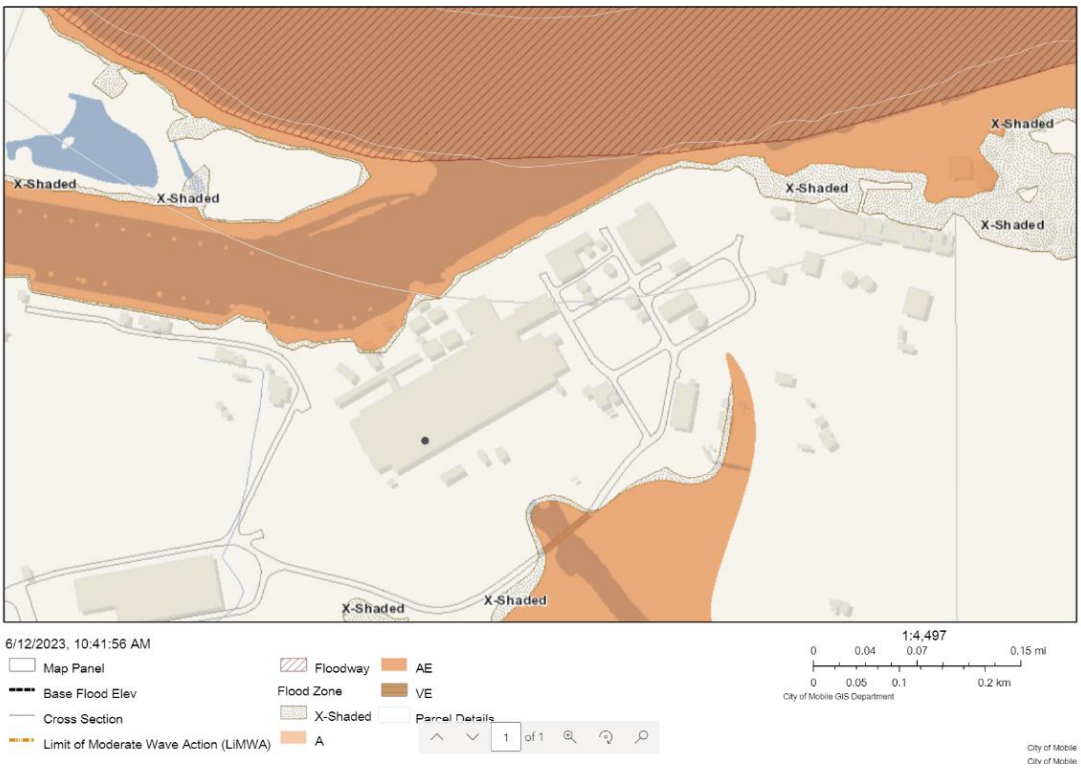

Figure 1: Plant Location with Floodplain Data

The Mobile River is impaired for organic enrichment, dissolved oxygen depletion, elevated nutrient concentrations, and siltation; attributed primarily to municipal and industrial sources, mining, and agricultural activities (https://pubs.usgs.gov/wri/wri024162/pdf/wrir4162.pdf). Area drinking water is sourced via groundwater and treated (http://lf.adem.alabama.gov/WebLink/ElectronicFile.aspx?docid=104534178&dbid=0&repo=ADEM).

The primary exposure pathway of concern would be chemical hazards that may be present in the wastewater effluent discharge to the Mobile River which may result in an ecological toxicity exposure that harms wildlife. Detailed analysis of wastewater chemical hazards will need to completed after the FEED and recommended cleanup and monitoring may need to be added.

3. REGULATORY FRAMEWORK

3.1 Regulatory Framework

Use of this technology has regulatory considerations and permitting considerations that will be further examined in the next project phase. A summary of considerations is provided below for legal frameworks such as the Comprehensive Environmental Response and Liability Act of 1980 (CERCLA), Toxic Substances Control Act (TSCA), Clean Water Act (CWA), Clean Air Act (CAA), Superfund Amendments and Reauthorization Act (SARA) Title III, and the Occupational Safety and Health Act (OSHA) and state level equivalents.

3.1.1 Air Emissions

Congress established much of the basic structure of the Clean Air Act (CAA) in 1970, and made major revisions in 1977 and 1990. In the State of Alabama the Alabama Department of Environmental Management (ADEM) has been delegated authority to regulate CAA requirements by the U.S. Environmental Protection Agency (EPA). The major portions of the CAA most relevant to consider for this technology review are further described below:

- National Ambient Air Quality Standards: To protect public health and welfare nationwide, the CAA requires the EPA to establish national ambient air quality standards for certain criteria pollutants: particulate matter (PM), ozone, sulfur dioxide (SO_2), nitrogen dioxide (NO_x), carbon monoxide (CO), and lead. The Barry Plant is located in Mobile County, Bucks, Alabama and in accordance with the Alabama Nonattainment/Maintenance Status for Each County by Year for All Criteria Pollutants, as provided by EPA, Mobile County is designated as attainment for all criteria pollutants. Note, the Nonattainment New Source Review (NNSR) program which applies to the construction of new major stationary sources and to major modifications of existing major stationary sources where the new source or modification will be located in a nonattainment area would not apply. Additionally, Prevention of Significant Deterioration (PSD) (40 Code of Federal

Regulations [CFR] 52.21), review is required on a pollutant-specific basis for a major modification of an existing major source. The Barry Plant is an existing major stationary source. Therefore, PSD permitting requirements apply to the facility only if a PSD "major modification" occurs at the facility. A modification is considered a major modification if both the project (CCS Facility) emissions increase resulting from the modification and the contemporaneous net emissions increase of any regulated pollutant are equal to or greater than the respective pollutants' significant emission rate. Applicability of PSD will need to be evaluated.

- Acid Rain: Program requirements for affected sources and affected units under the Acid Rain Program, pursuant to Title IV of the Clean Air Act, 42 U.S.C. 7401, et seq., as amended by Public Law 101-549 (November 15, 1990) are meant to achieve significant environmental benefits through reductions in SO_2 and NO_x emissions. The Barry Plant is currently permitted under a Phase II Acid Rain Permit, as documented in the air permit issued by Alabama Department of Environmental Management (ADEM), Facility No. 503-1001, Oris Code 0003, and is effective from February 2, 2021, through February 1, 2026. The permit cites SO_2 allowance allocations and NO_x requirements for each affected unit at the plant. Note, the existing Block 6 Unit of the Barry Plant is comprised of two NGCC units, Units 6A and 6B. Although no SO_2 allowance allocations or NO_x limits are cited in the acid rain permit specific to these units, the facility complies with applicable recordkeeping and reporting as detailed in the associated compliance plan and acid rain application. The implementation of CCS at this site does offer the potential reduction of both SO_2 and NO_x due to the EGR gas cleanup (for SO_2) and the EGR (for NO_x).

- Toxic Air Pollutants: The CAA regulates hazardous air pollutants (HAP) for stationary sources on a pollutant-by-pollutant basis based on risk per the National Emission Standards for Hazardous Air Pollutants (NESHAP) 40 CFR Part 61 and 63 rules. For referenced hazardous pollutants certain maximum achievable control technology (MACT) requirements must be met. Various emissions sources located at the Barry Plant are subject to NESHAP rules, e.g. Units 4 and 5

Power Boilers, Emergency Generators, 40 CFR 63 Subpart UUUUU and Subpart ZZZZ, respectively. Although Units 6A and 6B are not subject to any Part 63 NESHAP requirements, evaluation of project sources for potential applicability of Part 63 NESHAP requirements will need to be performed.

- Greenhouse Gases (GHG): The CAA regulates greenhouse gases for large and modified stationary sources. Specifically, if a facility contains any source category as listed under Subpart A of 40 CFR Part 98, Mandatory Greenhouse Gas Reporting, and meets an aggregate maximum rated heat input capacity and level of metric tons of CO_2 of the stationary fuel combustion units located at the facility, GHG reporting requirements would apply. The Barry Plant meets the applicable rule criteria; and therefore, complies with required GHG reporting, as cited under Title V Permit, Facility No. 503-1001. Additionally, control of GHG is also accomplished via the PSD program which can require implementation of best achievable control technology (BACT). The project's purpose is to help reduce GHGs through CCS, a form of BACT.
- New Source Performance Standards (NSPS): NSPS are set for specific categories of stationary sources, for which power plants are included. NSPS require new, modified, or reconstructed sources to control emissions to the level achievable by the best demonstrated technology as specified in the applicable provisions found under 40 CFR Part 60. Various emissions sources located at the Barry Plant are subject to NESHAP rules, e.g. Units 6A and 6B, Auxiliary Boiler, both subject to 40 CFR 60 Subpart Db. Evaluation of project sources for potential applicability of Part 60 NSPS requirements would need to be performed.
- ADEM: The Air Division administers the ADEM's Air Pollution Control Program pursuant to the authorities granted by the provisions of the Alabama Environmental Management Act, Ala. Code §§22-22A-1 to 22-22A-16 and the Alabama Air Pollution Control Act, Ala. Code §§22-28-1 to 22-28-23. The Air Division also administers the delegable provisions of the CAA. Alabama state regulations largely mirror federal regulations for air. Specifically, Part 60 NSPS rules are

incorporated by reference per the ADEM Administrative Code 335-3-10-.02(96) and -.03(3) and Part 61 and Part 63 NESHAP rules are incorporated by reference per 335-3-11-.02(31) and 335-3-11-.06(163), respectively. Note, currently ADEM has not implemented a supplemental air toxics control program outside of the federal NSPS and NESHAP requirements, as cited previously, that might impose additional and or more stringent state requirements for toxic pollutants, like aldehydes. ADEM has issued Title V Permit, Facility No. 503-1001, for the Barry Plant which includes all Air Pollution Control Program requirements.

- Cross-State Air Pollution Rule (CSAPR): CSAPR addresses air pollution from upwind states that cross state lines and affect air quality in downwind states. The rule requires certain states in the eastern half of the US to improve air quality, specifically SO_2 and NO_x, by reducing power plant emissions that cross state lines and contribute to pollution in downwind states. Each affected state is assigned to one of three different groups. Group 1 states follow the Original CSAPR rules, Group 2 states follow the CSAPR Update rules, and Group 3 states follow the Revised CSAPR Update rules. The CSAPR Update Rules, which power plants in the state of Alabama are subject to, was finalized in 2017. The SO_2 and NO_x Ozone Season Group 2 Trading Programs are referenced in 40 CFR Part 97 and aim to reduce SO_2 and NO_x from power plants by creating pollution budgets during ozone season. All affected sources located at the Barry Plant are currently subject to and comply with applicable provisions of CSAPR found under ADEM Administrative Code 335-3-5-.06 through 335-3-5-.36 and 335-3-8-.07 through 335-3-8-.70.

The project will likely require a major modification of the existing air permit. New air modelling will need to be performed to address the amines and aldehydes reviewed in this technology review to demonstrate protection of the environment and human health. As discussed above, literature indicates that protective values have been established that can be considered during the modelling exercise. The project will need to comply with appropriate control technologies, which will be set through the permitting process.

3.1.2 Wastewater and Stormwater Discharges

EPA is responsible for implementing certain provisions of the Clean Water Act (CWA) regulations (i.e., 40 CFR Parts 122-125). The CWA prohibits the discharge of pollutants into U.S. waters unless a National Pollutant Discharge Elimination System (NPDES) permit has been issued (33 U.S.C. 134). EPA has delegated this authority to ADEM. The major portions of the CWA most relevant to consider for this technology review are further described below. The existing facility is regulated under an individual NPDES permit (AL0002879), most recently modified in January 2023.

- Stormwater: Industrial contact stormwater discharges from the current facility discharge via a number of outfalls, primarily to the Mobile River, but two such outfalls discharge to Sisters Creek (Outfalls 029 and 030). Any new stormwater outfalls constructed as part of the project would require incorporation to this permit via modification.
- Wastewater: Various wastewater effluents, including process wastewater, are authorized under permit AL0002879, Outfalls 001 to 028. Any additional contributing effluents to these outfalls, or new outfalls, would require modification of the referenced permit. Depending on the effluent concentrations of process-related contaminants, the discharge may require treatment via biological treatment system or other means of reducing contaminant concentrations to meet water quality limitations on the Mobile River and/or other downstream waterways.
- Feed water to be provided via surface water intake structure upon the Mobile River would require permitting under CWA Section 316(b) in the event it were at least 2million gallons per day to be used for cooling purposes or other similar purposes to be determined by ADEM review. Operation of such an intake system would require compliance with performance and design standards under 316(b) to ensure protection of aquatic species of the source waterbody.

The project's basis of design stipulates the addition of biological treatment to support the reduction of pollutant loading that may be present to acceptable levels protective of the environment, and human and aquatic health. In preparation for permit application, best engineering judgement and/or vendor

estimations will be required to be included within the permit modification package for ADEM's consideration. The project will need to comply with appropriate pollutant mitigation technologies, which will be set through the permitting process. Subsequent the project's start up, follow up sampling is likely to be required so as to provide ADEM post-project effluent data from which to regulate the operations. This may include re-opening of the permit should the actual effluent characterizations following the project are significantly varied from those estimates provided in the modification application.

3.1.3 Hazardous Waste Management

The Resource Conservation and Recovery Act (RCRA) gives EPA the authority to control hazardous waste from the "cradle-to-grave." This includes the generation, transportation, treatment, storage, and disposal of hazardous waste. RCRA also set forth a framework for the management of non-hazardous solid wastes. The EPA has delegated this authority to ADEM. The plant is registered as a small quantity generator of hazardous waste (ALD082148800).

The project will generate hazardous waste in the form of spent activated carbon filters associated with treatment of the CO_2 absorber and potentially unused solvent. Both of these waste streams will require disposal via incineration. Appropriate vendors will need to be selected and identified as part of the next project phase.

CERCLA, known as Superfund, was enacted to address abandoned hazardous waste sites in the U.S. The law has subsequently been amended, by the SARA, and the Small Business Liability Relief and Brownfields Revitalization Act of 2002. The plant is not listed in the Superfund program and this program is not expected to be applicable.

Minimization of hazardous material is accomplished by the application of EGR, concentrating the CO_2 before entering the CCS and reducing the amount of flue gas that interacts with the CCS solvent.

3.1.4 Chemical Hazards and Toxic Substances

OSHA regulates chemical hazards and toxic substances in several ways that are relevant to the project as described below. Additionally, under the Toxic Substances Control Act (TSCA), as amended, EPA evaluates potential risks from new and existing chemicals and acts to address any unreasonable risks chemicals may have on human health and the environment.

- The OSHA Hazard Communication Standard is designed to ensure that information about chemical and toxic substance hazards in the workplace and associated protective measures is disseminated to workers. Chemical manufacturers and importers are required to evaluate chemical hazards and prepare labels and safety data sheets to communicate hazard information to downstream customers. In addition, employers with hazardous chemicals in their workplaces are required to have labels, SDSs for exposed workers, appropriate personnel protective equipment (PPE), and train workers on how to handle chemicals safely.
- OSHA Permissible Exposure Limits (PELs) are enforceable limits set to protect workers against health effects associated with exposure to hazardous substances. PELS are based on an 8-hour time weighted (TWA) average exposure. The 8-hour TWA PEL is defined in the Federal Register, Vol. 57, No. 114, June 12, 1992, pps 26539, 26556, 26572, 26573 and 26590 as “TWA is the employee’s average airborne exposure in any 8-hour work shift of a 40-hour work week which shall not be exceeded.” PELs are available for three of the chemicals listed in Table 1: sodium hydroxide (2 mg/m3), acetaldehyde (360 mg/m3), and isophorone (140 mg/m3).
- OSHA Emergency Action Plan (EAP) is a plan to prepare employees and responders to safely respond to emergency conditions, which may include the release of chemical hazards and fires. This plan covers responsibilities, training, alarms systems, response procedures, and notifications procedures. Implementation of EAP and training of plant employees will be responsibility of the Host site operator.

- EPA's Toxic Substances Control Act (TSCA), EPA evaluates the potential risks from new and existing chemicals and addresses any unreasonable risks they may have on human health and the environment. Formaldehyde is regulated under TSCA and requires the EPA evaluate significant new uses of formaldehyde. As formaldehyde is produced as a by-product of combustion, this would not be a significant new use. However, the EPA may consider evaluating the OASE blue® and similar solvents, as well as the amines commonly used for carbon capture (MEA, MDEA, 2-AMP, DGA, PZ, and DEA) to determine if they present at unreasonable risk to safety but has not yet proposed to do so.
- Toxic Release Inventory (TRI), is a resource for learning about toxic chemical releases and pollution prevention activities reported by industrial and federal facilities. The plant currently files annual TRI reports, including for formaldehydes. The project will need to evaluate the chemicals described in this technical review and determine if the need to be included in annual TRI reports.

The project will need to share a SDSs regarding OASE blue®, antifoam, and sodium hydroxide. Training, labelling and inclusion of these chemical hazards will need to be included in worker safety and health plans. The project will also need to provide appropriate PPE and training for the handling of these chemical hazards. Further the project will need to continue TRI reporting and update the EAP to reflect the additions of these project components.

4. RISK MANAGEMENT

Alabama Power is part of the Southern Company, where Safety First is their number one value. They use various metrics to indicate the effectiveness of the company's safety efforts. These metrics help guide the company in the execution of activities which strengthen safety performance and culture. This project and the technical and chemical risks it poses will be embedded into existing workplace environmental, health and safety programs, trainings, procedures, and management systems. Specific risk management strategies for the project coming out of this technological review include:

- Air controls: The project will work with the regulatory permitting process (State of Alabama Department of Environmental Management) to set MACT/BACT and other appropriate controls to meet air emission limits and be protective of human health and the environment.
- Water effluent controls: The project basis for design call for the addition of biological treatment to the wastewater treatment stream. The project will work with the regulatory permitting process (NPDES permit as administered by State of Alabama Department of Environmental Management) to set appropriate controls to meet water effluent limits and be protective of human health and the environment, including ecological considerations.
- Waste controls: The project will need to select a licensed waste incineration facility to manage the anticipated waste streams.
- Chemical hazard and toxic substance controls: Understanding potential occupational and environmental hazards will inform the project on appropriate PPE and environmental measures that should be taken in regard to air, water, and waste emissions. These considerations and plan adjustments should include precautions for safe handling and conditions for safe storage, including incompatibilities with other materials that may be used in the process. The project will also need to update TRI reporting and EAPs for the new chemical hazards present.

Appendix XX

Environmental Justice Analysis

Notes:

(1) Original submittal to DOE on November 29, 2023

Executive Summary

This Environmental Justice Analysis is being commissioned for the United States (U.S.) Department of Energy (DOE) Office of Fossil Energy and Carbon Management (FECM) under the DOE funded program DE-FE-0032131. The Principal Investigators (PIs) for this project are John Sholes of GE Gas Power (GEGP), with support from Southern Company.

This report serves as the stakeholder mapping and impacts analysis component of the preliminary environmental justice (EJ) analysis of the front-end engineering design (FEED) study of a proposed carbon capture project at Alabama Power Company's James M. Barry Electric Generating Plant (Plant Barry) and has been developed in accordance with Presidential Executive Order 13985: Advancing Racial and Equity Support for Underserved Communities Through the Federal Government. This report has been compiled by the WSP USA (a division of WSP Global, Inc.) Communications and Involvement Practice in collaboration with the WSP Equity Center of Excellence and with support from Southern Company Services staff.

This technological review is focused on the incremental environmental and safety risks and benefits of the capture facility based on the proposed materials and process. Major concerns include solvents that are under increasing scrutiny by the U.S. Environmental Protection Agency (EPA) and National Institute for Occupational Safety and Health (NIOSH). Exposures to other chemical concerns will also be addressed, as appropriate. Unanticipated or uncontrolled environmental, health and safety (EH&S) risks will be evaluated so commercialization of Carbon Dioxide (CO_2) capture technologies will not impede project development and implementation.

The greatest value and success in community and stakeholder engagement is founded in facilitating meaningful interactions with a diversity of stakeholders across sectors and scales (e.g., elected officials; sovereign tribal nations; businesses; civic and community groups, media, regulatory agencies; environmental justice populations; and generally, the local community) throughout the planning and decision-making process.

Plant Barry FEED Study

Environmental Justice Analysis

October 2023

Southern Company

CONTENTS

CONTENTS **3**

INTRODUCTION **4**

BACKGROUND **6**

STAKEHOLDER MAPPING **7**

Methodology 7

Study Area Demographics 7

Environmental Justice Populations 10

ANTICIPATED IMPACTS ON ENVIRONMENTAL JUSTICE POPULATIONS **17**

COMMUNITY AND STAKEHOLDER ENGAGEMENT **21**

CONCLUSION **24**

APPENDIX **25**

I. DOE Burden Indicators of Disadvantaged Communities 25

INTRODUCTION

This report serves as the stakeholder mapping and impacts analysis component of the environmental justice (EJ) analysis of the front-end engineering design (FEED) study of a proposed carbon capture project at Alabama Power Company's James M. Barry Electric Generating Plant (Plant Barry) and has been developed in accordance with Presidential Executive Order 13985: Advancing Racial and Equity Support for Underserved Communities This report has been compiled by the WSP USA (a division of WSP Global, Inc.) Communications and Involvement Practice in collaboration with the WSP Equity Center of Excellence and with support from Southern Company Services staff. Through the Federal Government.

The objectives of the report are as listed below:

- Define the socio-economic makeup of the community within the Study Area[1].
- Identify the environmental justice populations within the Study Area.
- Classify the anticipated impacts of the project on environmental justice populations.

For the purposes of this report, the term "environmental justice" is defined in alignment with the U.S. Department of Energy (DOE) as "the fair treatment and meaningful involvement of all people, regardless of race, color, national origin, or income, with respect to the development, implementation, and enforcement of environmental laws, regulations, and policies." In addition to this DOE-sourced definition, the following analysis includes the additional consideration and priority of avoiding, minimizing, and/or mitigating disproportionately high and adverse human health and environmental effects, including social and economic effects, on environmental justice populations.

The DOE defines "underserved communities" as populations sharing a particular characteristic, as well as geographic communities, who have been systematically denied a full opportunity to participate in aspects

[1] The Study Area being considered for this analysis is delineated by a 10-mile radius buffer surrounding the Plant Barry site at the business address: 15300 Highway 43, Bucks, AL, 36512, USA.

of economic, social, and civic life, including but not exclusive to persons referenced in Executive Order 13985 definition of "equity" as:

> The consistent and systematic fair, just, and impartial treatment of all individuals, including individuals who belong to underserved communities that have been denied such treatment, such as Black, Latino, and Indigenous and Native American persons, Asian Americans and Pacific Islanders and other persons of color; members of religious minorities; lesbian, gay, bisexual, transgender, and queer (LGBTQ+) persons; persons with disabilities; persons who live in rural areas; and persons otherwise adversely affected by persistent poverty or inequality. (Presidential Executive Order 13985: Advancing Racial and Equity Support for Underserved Communities Through the Federal Government, January 2021)

The term "environmental justice populations" will be used throughout this report to refer to equity-priority communities within the Study Area and encompasses, but is not limited to, the outlined definitions of "disadvantaged" and "underserved" communities. Additional considerations for the identification of environmental populations will also include Climate and Economic Justice markers intended to indicate vulnerabilities and burdens that persons and populations as outlined by the White House Council on Environmental Quality's Climate and Economic Justice Screening (CEJST) tool and presented in the Environmental Justice Populations section of this report.

BACKGROUND

The proposed technology for this FEED study project is focused on carbon capture, utilization, and storage (CCUS) for power generation applications at Southern Company subsidiary Alabama Power's James M. Barry Electric Generating Plant located in Bucks, Alabama.

The FEED study project evaluates retrofitting two existing gas turbines, as well as conducting gas and steam turbine equipment enhancements using resources such as natural gas, land, and water to produce low-carbon energy. The specific design being pursued in this project is intended to minimize resource requirements and maximize the value of those resources.

The proposed carbon capture equipment footprint is approximately 5-6 acres. All-in, the resulting plant would use approximately 15 acres to produce nearly 580 MW of low-carbon electricity to the grid. To produce a similar amount of electricity through utility-scale solar installations, not accounting for energy storage to address non-producing hours, would require approximately 2,900 to 5,800 acres.

STAKEHOLDER MAPPING

The following Stakeholder Mapping section presents the methodology used for the stakeholder mapping component of this report, the identification of the socioeconomic makeup of the communities within the Study Area, and the identification of environmental justice populations within the Study Area.

Methodology

The report presented below was compiled using data gathered and cross-referenced from the U.S. Census Bureau, the Department of Energy's Energy Justice Mapping Tool's Disadvantaged Communities Reporter, the United States Environmental Protection Agency's (EPA) Environmental Justice Screening and Mapping Tool, and the White House Council on Environmental Quality's Climate and Economic Justice Screening Tool.

The methodology for this environmental justice analysis includes analysis of data collected using the aforementioned reference tools, as well as informational interviews with select Southern Company Services staff that provided insight on the proposed technology and potential key stakeholders within the Study Area.

Study Area Demographics

The Study Area being considered for this analysis is delineated by a 10-mile radius buffer surrounding the Plant Barry site at the business address: 15300 Highway 43, Bucks, AL, 36512, USA. A 10-mile buffer was selected as the metric for this Study Area in accordance with the 10-mile buffer settings within the Environmental Justice Screening and Mapping Tool, as well as the 10-mile buffer designation used by the DOE Burden Indicators of Disadvantaged Communities for the food desert burden indicator (see Appendix I. DOE Burden Indicators of Disadvantaged Communities).

The map displayed in Figure 1 illustrates the Study Area as a 10-mile radius surrounding the Plant Barry business address and is indicated by a yellow buffer zone that represents the parameters of the Study Area for this environmental justice analysis.

Figure 1
Map of 10-mile buffer surrounding Plant Barry



The Study Area surrounding Plant Barry, as shown in Figure 1, encompasses land within three counties (i.e., Mobile County, Baldwin County, and Washington County). The Study Area outlined has a reach that spans ten census tracts (i.e., 1097005800; 1129044200; 1097006000; 1097005900; 1097006104; 1097005700; 1097005600; 1097003800; 1003010300; 1003010100).

Demographic data for the Study Area according to data from the United States Census Bureau's American Community Survey (ACS) 2017-2021 estimates is summarized in Figure 2 below.

Figure 2

Table of demographics data within the Study Area from according to data from the United States Census Bureau's American Community Survey (ACS) 2017-2021 estimates.

	2017-2021 ACS Estimates	Percentage
Population	10,430	N/A
Median Per Capita Income	$31,770	31% low income nationally
Households	3,620	N/A
Owner Occupied	8,657	83%
Renter Occupied	1,773	17%
Population by Sex		
Male	5,215	50%
Female	5,215	50%
Population by Age		
Age 0-4	626	6%
Age 0-17	2,608	25%
Age 18+	7,823	75%
Age 65+	1,669	16%
Population by Race		
White	6,988	67%
Black	2,399	23%
Asian	104	1%
Hispanic	0	0%
American Indian	730	7%
Hawaiian/Pacific Islander	0	0%
Other race	104	1%
Two or more races	104	1%
Populations Age 5+ Ability to Speak English		
Speak only English	10,326	99%
Non-English at Home	104	1%

The demographic data outlined in Figure 2 illustrates a Study Area comprised of persons that predominantly have at least a high school degree, speak English-only, and mostly identify as White (67%), Black (23%), or American Indian (7%).

Environmental Justice Populations

Using the data tools outlined in the Methodology section of this report, the data presented in the section below identifies Environmental Justice Population areas within the Study Area.

As depicted in the map illustrated in Figure 3 the Department of Energy Justice Mapping Tool's Disadvantaged Communities Reporter designates the census tract which Plant Barry is located within (i.e., 01097005800) as having a status of "disadvantaged"[2] and has a "disadvantaged communities" national ranking in the 86% percentile and a "disadvantaged communities" score of 20[3]. This "disadvantaged communities" score was calculated by the reporter tool for its percentile values for each of the DOE's 36 identified "disadvantaged communities" burden indicators. See Appendix Item 3 for the full list and definitions of the 36 burden indicators.

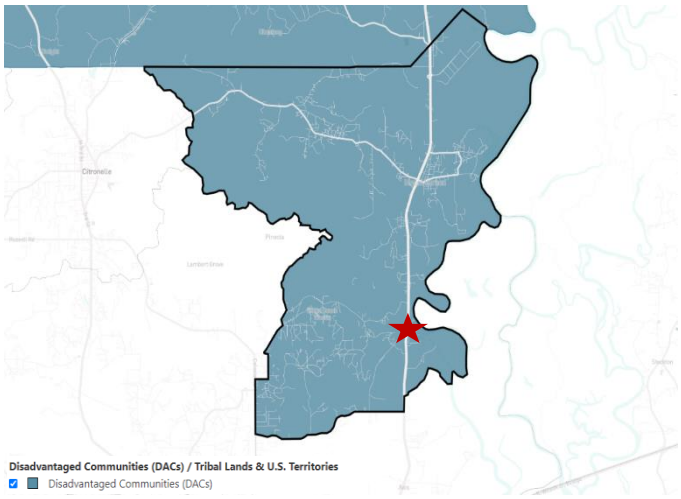

Figure 3
Map of Energy Justice Mapping Tool - Disadvantaged Communities Reporter Plant Barry census tract 01097005800 designation

[2] According to the DOE tool, to be considered "disadvantaged," a census tract must rank in the 80th percentile of the cumulative sum of the 36 burden indicators and have at least 30% of households classified as low-income. DOE Groups the 36 burden indicators into 4 categories: energy burden, environmental and climate hazards, socio-economic vulnerabilities and fossil dependence. For this census tract, ten of the 36 indicators rank above the 80th percentile nationally. Five of these indicators are in the socio-economic vulnerability category, three are in the environmental and climate hazards category, one is in the energy burden category and one is in the fossil dependence category.

[3] U.S. Department of Energy, Energy Justice Mapping Tool - Disadvantaged Communities Reporter (2023).

According to the White House Council on Environmental Quality's Climate and Economic Justice Screening tool (CEJST), the census tract where Plant Barry is located (01097005800) has ten Climate and Economic Justice burdens that score above 80% including the presence of one or more Formerly Used Defense Site (FUDS). Using percentiles, these burdens indicate vulnerabilities and burdens that persons and populations within the census tract may face. These percentiles indicate how much burden is projected per tract when compared to other tracts nationally.

The ten burdens identified for the census tract are expected agriculture loss rate; expected building loss rate; project wildfire risk; asthma; diabetes; heart disease; FUDS; transportation barriers; wastewater discharge; and low income. The percentile scores for each of the identified burdens along with the marker definitions are outlined in Figure 4.

Figure 4
Climate and Economic Justice Screening Tool's burdens above 80%

Climate and Economic Justice Markers	Percentile
Expected agriculture loss rate Economic loss to agricultural value resulting from natural hazards each year.	84%
Expected building loss rate Economic loss to building value resulting from natural hazards each year.	96%
Projected wildfire risk Projected risk to properties from wildfire from fire fuels, weather, humans, and fire movement in 30 years.	89%
Asthma Share of people who have been told they have asthma	85%
Diabetes Share of people ages 18 years and older who have diabetes other than diabetes during pregnancy	95%
Heart Disease Share of people ages 18 years and older who have been told they have heart disease	91%
Legacy Pollution Concerns as a Formerly Used Defense Sites Presence of one or more Formerly Used Defense Site within the tract.	Yes
Transportation barriers Average of relative cost and time spent on transportation.	98%
Wastewater discharge Modeled toxic concentrations at parts of streams within 500 meters.	86%
Low income People in households where income is less than or equal to twice the federal poverty level, not including students enrolled in higher education.	82%

Of the ten Climate and Economic Justice burdens, the two most outstanding for the census tract are transportation barriers (98%), which represent the average of relative cost and time spent on transportation and expected building loss rate (96%) which represents the economic loss to building value resulting from natural hazards each year.

Using the environmental indicators set by the U.S. EPA and incorporated into the Environmental Justice Screening and Mapping tool, the indicator values for the Study Area are presented in Figure 5 alongside the state and national value averages for each of the respective set environmental justice index categories.

Figure 5
Environmental Justice Index Data for the Study Area compared to state and national averages.

Environmental Justice Indicator	Study Area Value	State Average	National Average
Pollution and Sources			
Particulate Matter 2.5 (µg/m^3)	9.15	9.17	8.08
Ozone (ppb)	57.9	60.8	61.6
Diesel Particulate Matter* (µg/m^3)	0.129	0.189	0.261
Air Toxics Cancer Risk* (lifetime risk per million)	30	34	25
Air Toxics Respiratory HI* (Ratio of exposure concentration to health-based reference concentration)	0.44	0.44	0.31
Toxic Releases to Air (toxicity-weighted concentrations in air of TRI listed chemicals)	6600	21000	4600
Traffic Proximity (daily traffic count/distance to road)	24	79	210
Lead Paint (% Pre-1960 Housing)	0.097	0.19	0.3
Superfund Proximity (site count/km distance)	0.13	0.051	0.13
RMP Facility Proximity (facility count/km distance)	0.38	0.31	0.43
Hazardous Waste Proximity (facility count/km distance)	0.8	0.43	1.9
Underground Storage Tanks (count/km^2)	0.59	1.9	3.9
Wastewater Discharge (toxicity-weighted concentration/m distance)	0.034	0.3	22
Socioeconomic Indicators			
Demographic Index	33%	38%	35%
Supplemental Demographic Index	16%	17%	15%
People of Color	34%	35%	40%

Low Income	33%	36%	30%
Unemployment Rate	6%	6%	5%
Limited English Speaking	0%	1%	5%
Less Than High School Education	18%	13%	12%
Under Age 5	6%	6%	6%
Over Age 64	18%	17%	16%
Low Life Expectancy	21%	23%	20%

The table in Figure 5 illustrates that amongst the Screening Tool's environmental justice indicators, the particulate matter, air toxics cancer risk, and Toxic Releases to Air rates are above the national average for pollution indicators for the Study area. The socioeconomic indicators above the national average are for low-income households; Unemployment rate, persons with less than a high school education; and persons over the age of 64. The data presented in Figure 5 also indicated that the population within the Study Area has a lower life expectancy than the national average by 1%.

Using the EPA's Environmental Justice Screening and Mapping Tool the following maps depict indicators of Environmental Justice Populations within the Study Area for the following category designations:

- Low-income
- People of color
- Unemployment rate
- Low life expectancy
- Lack of health insurance

Figure 6 *Map of EPA's Environmental Justice Screening and Mapping Tool "low-income" designation within the Study Area*

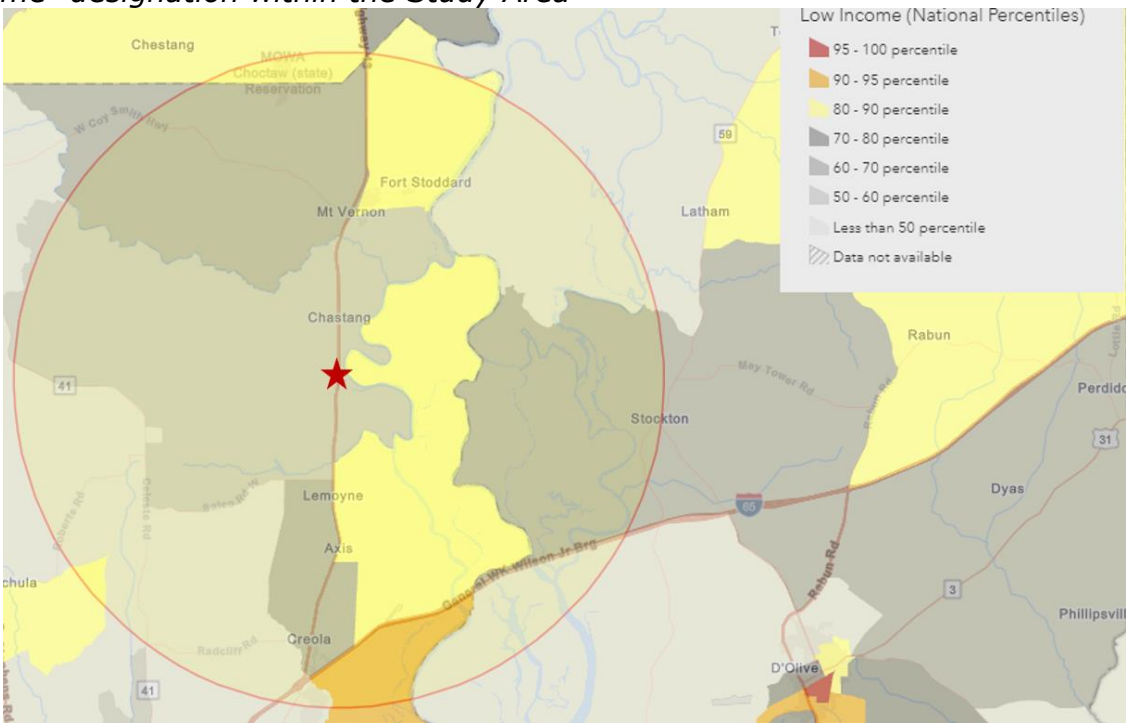

Figure 7
Map of EPA's Environmental Justice Screening and Mapping Tool "people of color" designation within the Study Area

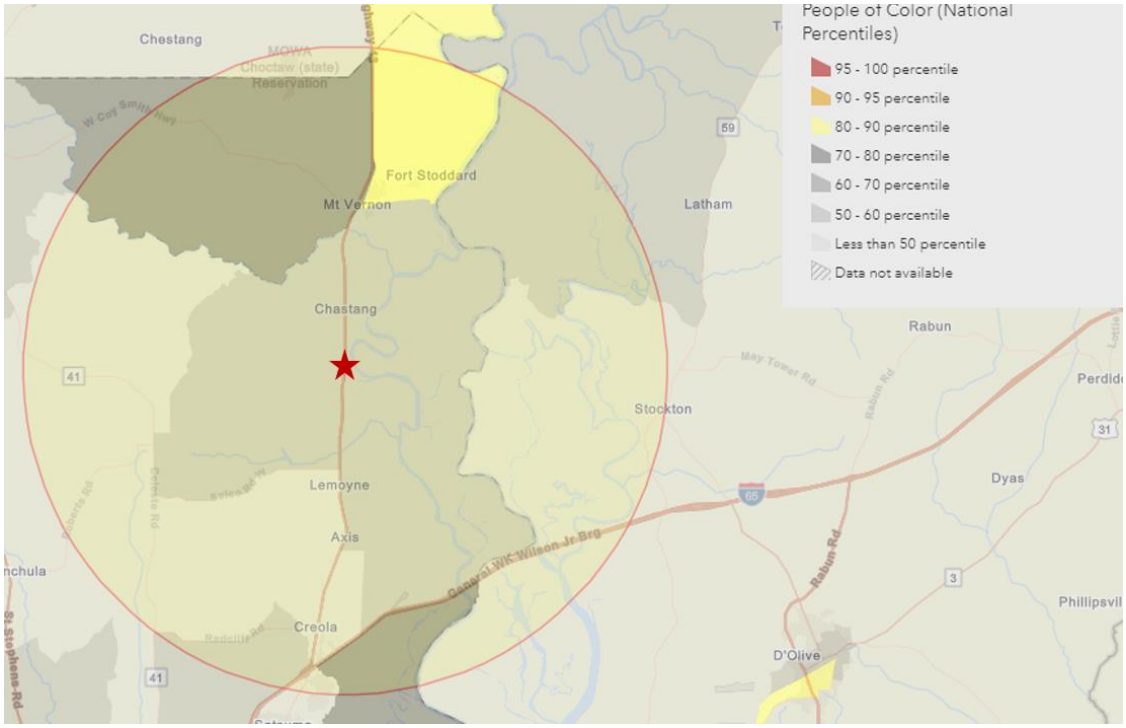

Figure 8
Map of EPA's Environmental Justice Screening and Mapping Tool "unemployment rate" designation within the Study Area

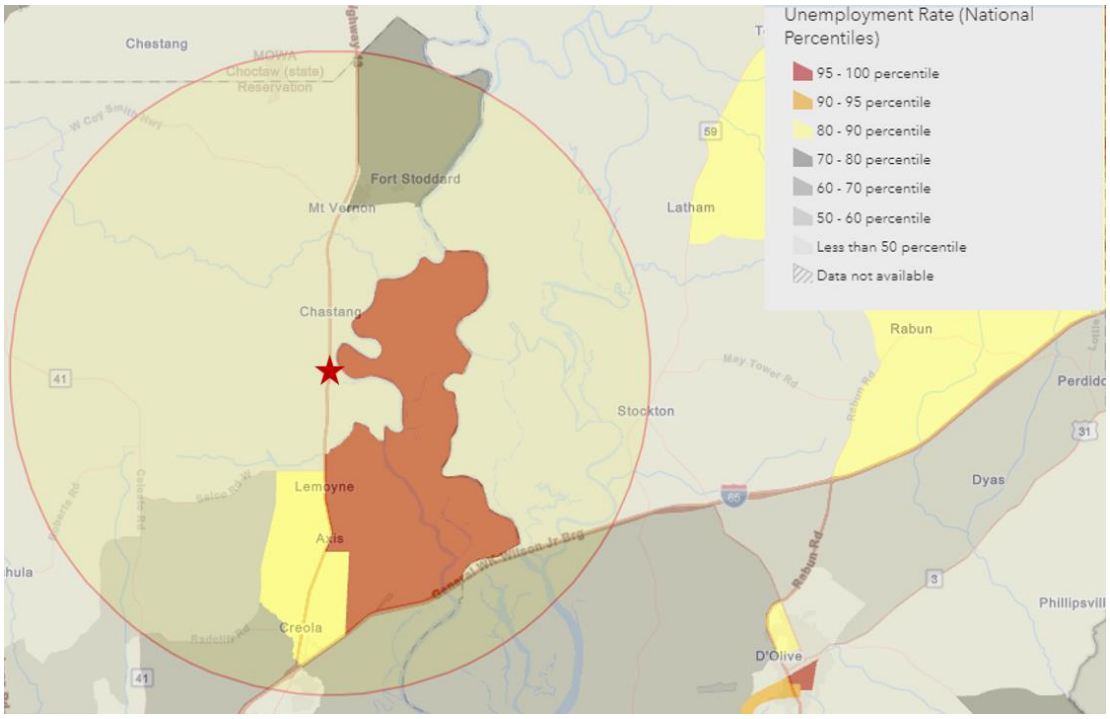

Figure 9
Map of EPA's Environmental Justice Screening and Mapping Tool "low life expectancy" designation within the Study Area

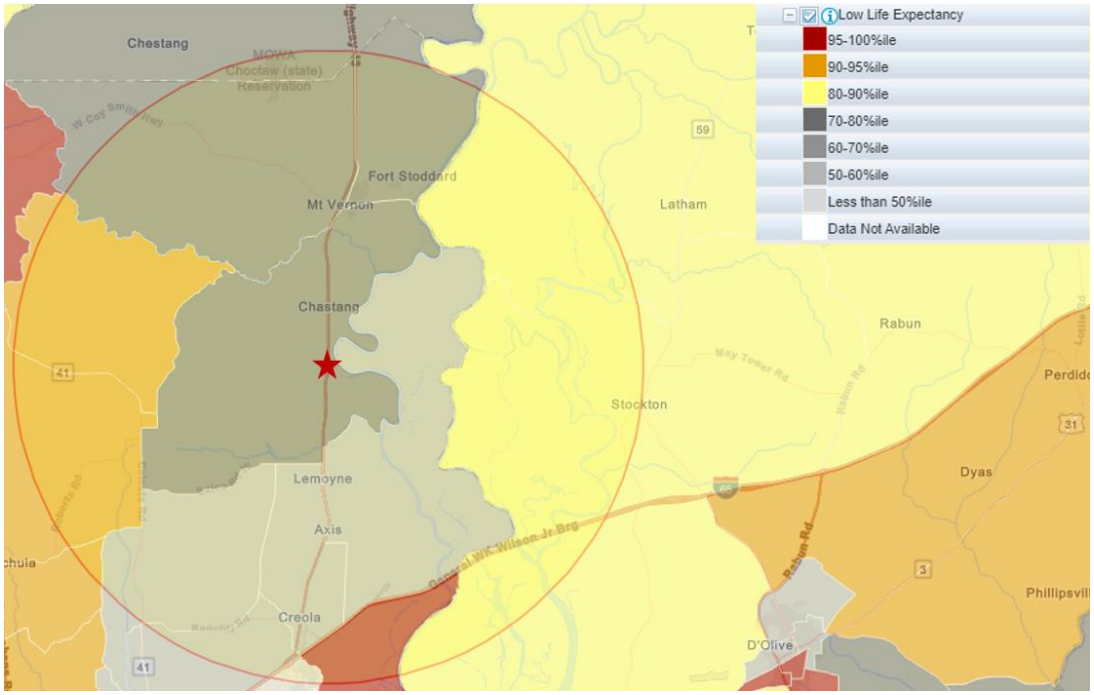

Figure 10
Map of EPA's Environmental Justice Screening and Mapping Tool "lack of health insurance" designation within the Study Area

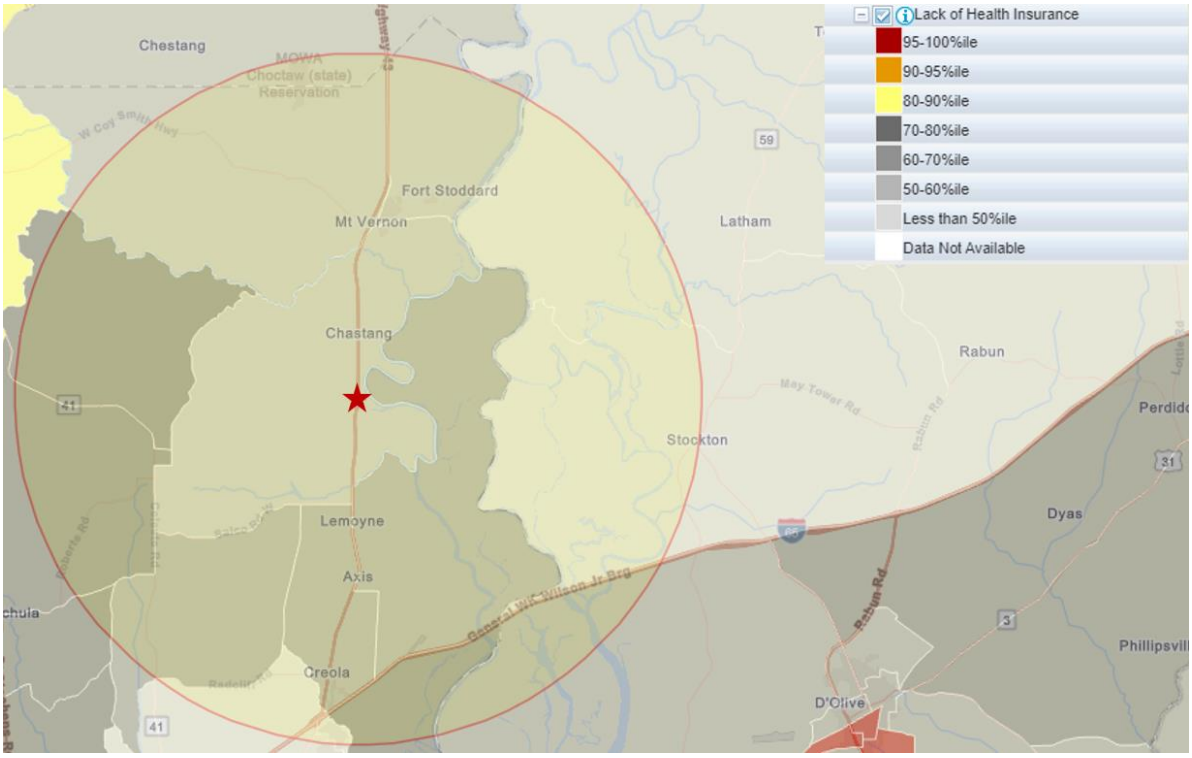

In addition to the indicators listed above, federally recognized tribal lands and U.S. territories, in their entirety, are categorized as "disadvantaged communities" by the White House Council on Environmental Quality's Climate and Economic Justice Screening (CEJST) tool. During the environmental justice analysis investigation period, six Sovereign Tribal Nations as well as one state recognized tribe with cultural and/or historical ties to the Study Area were identified.

ANTICIPATED IMPACTS ON ENVIRONMENTAL JUSTICE POPULATIONS

The following section identifies anticipated impacts from the proposed design in accordance with the considerations provided in Appendix N of Executive Order 13985. Potential imbalances in both the benefits and burdens of carbon capture projects on environmental justice populations are considered. "Disproportionately high and adverse" refers to an adverse effect that will be suffered by an environmental justice population and is appreciably more severe or greater in magnitude than the adverse effect that will be suffered by a non-environmental justice population. Impacts can be both positive and negative and manifest as benefits and/or burdens, which may occur in the short, medium, or long term. In this comprehensive analysis consideration of all these factors as well as the cumulative effect of this project has been incorporated.

The inclusion of exhaust gas recirculation (EGR) within the proposed retrofit design reduces the required footprint and allows for more carbon dioxide (CO_2) removal per expended energy as compared to other designs. This outcome could help to reduce the impact of low air quality rating within the Study Area and improve the EPA's Environmental Justice Index rating of air pollution within the Study Area referenced in Table 5.

Additionally, pursuing a retrofit versus a new build minimizes the resource impact by avoiding repurposing non-industrial land. The proposed carbon capture equipment footprint is approximately 5-6 acres. All-in, the resulting plant would use approximately 15 acres to produce nearly 580 MW of low-carbon electricity to the grid. To produce a similar amount of electricity through utility-scale solar installations, not accounting for energy storage to address non-producing hours, would require approximately 2,900 to 5,800 acres.

While the proposed technology does require additional water resources to address cooling needs for the process, this additional demand is not expected to be a significant strain on existing water resources and these requirements are much less than the retiring coal units' previous demands. The addition of carbon

capture to the existing combined cycle plant would demand up to 2860 gallons per minute (GPM) of raw water input to account for evaporative cooling and process water makeup. This translates to roughly 308 gallons of water per MWh of power to the grid. For context, this is only an 11% increase over the average water withdrawal demand for natural gas combined cycle power generation and would account for less than 2% of the average water withdrawal demand for coal-based generation.[4]

Coal will not be used as feedstock; therefore, no coal waste will need to be remediated. The proposed carbon capture technology and associated balance of plant design seeks to minimize waste wherever possible and maintain control of any potential waste at all times. The carbon capture system would be expected to produce small quantities of waste that would be properly disposed of after characterization. One form of solid waste produced by the proposed technology would be spent activated carbon materials used within the process. Approximately 91 short tons per year would be disposed of by incineration due to the potential for contamination from contact with the solvent and/or degradation products. There would also be small quantities of industrial solid waste produced using consumable supplies such as filters and maintenance materials. Disposal practices for these materials are well understood and would likely not have adverse impacts on local residents. Transport of these items by truck to a properly permitted industrial and construction/demolition waste landfill would not have significant impact on the community. Maintenance activities would be matched to existing plant operations where such practices are already routine. Additionally, recycling best practices are employed for applicable materials.

The proposed carbon capture technology would also produce solvent reclaiming waste. Solvent reclaiming waste is an aqueous solution of heat stable salts and potentially trace amines. Reclaimer waste will need to be characterized and treated or disposed of according to those results. This would be done with a certified industrial waste disposal contractor and transported for disposal via truck.

[4] Source: https://www.eia.gov/todayinenergy/detail.php?id=56820#:~:text=Natural%20gas%20plants%20use%20a,19%2C185%20gal%2FMWh%20for%20coal.

Wastewater would also be produced by the carbon capture process. This is expected to total approximately 283 GPM. Plant Barry has an existing wastewater treatment system that can absorb this capacity.

This technology does not purport to remediate legacy environmental impacts of the energy industry; however, it may result in the decrease of nitrous oxides (NO_x) emissions through exhaust gas recirculation due to the reduced flue gas emissions rate. The same should be seen for particulate matter and carbon monoxide (CO). The FEED study projects NO_x emissions of 0.0021 pounds per million British thermal units (lb/MMBtu) as compared to the current permit limit of 0.013 lb/MMBtu. The expected parts per million (ppm) of NOx is expected to be approximately the same or slightly lower, but the 40% reduction in stack flow results in a nearly 40% reduction in lb/MMBtu. That is the NOx emissions would be approximately 0.0035 lb/MMBtu in the current configuration without EGR. Projected CO emissions would be 0.00454 lb/MMBtu as compared to the current permit limit of 0.06 lb/MMBtu. The expected parts per million (ppm) of NOx is expected to be approximately the same or slightly higher, but the 40% reduction in stack flow results in a nearly 40% reduction in lb/MMBtu. That is the CO emissions would be approximately 0.0075 lb/MMBtu in the current configuration without EGR. While the carbon capture system would not be intended for removing particulate matter, it is possible that some particles would become entrained in the circulating solvent and then be removed from the exiting flue gas. It is possible that emissions of ammonia or volatile organic compounds (VOCs) could be increased by fugitive emissions from the carbon capture process, but further ongoing work in other programs will provide updated information and mitigation strategies to address any identified potential concerns. In the current FEED, volatile organic compounds (VOCs) are expected to remain around 1 part per million (ppm), ammonia emissions are expected to be below 2.5 milligrams per normal cubic meter (mg/Nm^3), amine emissions are expected to be below 5 mg/Nm^3, and total aldehydes are expected to be below 2 mg/Nm^3. EPA does not have clearly defined emissions standards for ammonia, amines, or total aldehydes. The emissions monitoring practices and standards that would be applied to such a project would be determined in consultation with the state regulatory agency, the Alabama Department of Environmental

Management (ADEM) during the air permitting process. Through analysis of the findings presented throughout the stakeholder mapping component of this environmental justice analysis, this report concludes that while there are Environmental Justice Populations within the Study Area, there will be no significant anticipated adverse impacts on the Environmental Justice Populations within the Study Area by way of the proposed project.

COMMUNITY AND STAKEHOLDER ENGAGEMENT

The studied carbon capture project would likely pique community-wide interests due to the novel and innovative scope and nature of the proposed technology. By prioritizing equitable engagement with key stakeholders, the project could achieve more robust community support. Southern Company has invested millions in non-profits to help its citizens thrive through both corporate giving and its corporate foundations (the Alabama Power Foundation, Georgia Power Foundation, and Southern Company Foundation), affirming its commitment specifically in the areas of education, the environment, the community, and through social justice initiatives. The relationships built throughout the region will serve as a starting point for public engagement. If the studied technology were to be implemented, Southern Company Services (SCS) would engage with these groups to develop its outreach list to ensure the team is reaching the most appropriate stakeholders for the benefit of both the project and the community.

SCS will use stakeholder mapping, as discussed above, to critically evaluate the proposed project area and understand potential barriers to engagement. If the studied technology were to be implemented, SCS's stakeholder outreach plan would consider these characteristics to ensure the plan is engaging the appropriate community organizations, leaders, and representatives. SCS would draw on existing resources within Southern Company to facilitate stakeholder engagement in each community.

SCS has a designated individual (the Community Benefits and Justice40 Project Manager) responsible for ensuring that community engagement plans are implemented appropriately. In addition, Alabama Power Company (APC) has existing resources dedicated to engagement in the communities affected by this project. For the proposed project location, the team would include the Division Vice President, Division Area Manager and Community Relations Managers that would assist in carrying out any community engagement plans for this project (the "project team"). Members of the project team have regular engagements with city and county officials and other community leaders and would engage with local community leaders about the proposed project as appropriate.

SCS and APC (collectively, "the Company") also aim specifically to enhance support of historically underserved communities, including Black, Asian, Hispanic, other communities of color, and LGBTQ+. The Company works with non-profits and local leaders to support, educate, advocate, and bring awareness to various issues impacting its customers and communities statewide. The team responsible for implementing any engagement plan will include all groups mentioned above as well as subject matter experts in Workforce Development, Human Resources, Environmental Affairs, Research & Development, Labor Relations, and Public Relations.

If the studied technology were to be implemented, the team would develop a plan to engage stakeholders in the area surrounding Plant Barry regarding the proposed installation of the carbon capture equipment. The plan would include conducting community outreach to share project information, gather feedback, respond to specific concerns where possible, and collaborate with new and existing stakeholders. The team plans to focus any outreach on elected officials, municipalities, tribal entities, educational institutions, labor organizations, and other community organizations that can represent the individuals who may be impacted by this project, in addition to engaging with individuals through public listening sessions. Stakeholder interviews would likely be used to explore and further understand any project related challenges the impacted communities face and how the project team can potentially help address such challenges, as appropriate. Findings from such a process would inform further stages of the engagement plan.

While specifics of the plan would depend on stakeholder input, engagement would focus on workforce development, DEIA initiatives, and environmental benefits. APC has a dedicated team in its workforce development department that aligns workforce needs with employer needs through formalized education and other nonprofit training programs. For example, in partnership with community colleges, contractors, and others, APC developed the Pre-Apprentice Lineworker Program. Currently, APC delivers trainings at four community colleges (including Bishop State Community College, located near Plant Barry) of which three are historically black colleges and universities. This training program is made accessible through company-provided scholarships for underrepresented students and WIOA funding. If the studied

technology were to be implemented, APC's workforce development team would engage with local educational and training partners to coordinate relevant opportunities.

With respect to DEIA, APC is committed to an equitable and inclusive workplace. The Moving to Equity Framework was established in 2020, and subsequently updated in 2022, with five pillars: talent, work environment, community investment & social justice, civic engagement, and supplier inclusion. APC is committed to increasing and improving outreach, recruitment, hiring and retention of diverse groups at all levels of the workforce, ensuring equity in leadership development programs, and seeking diverse candidates for management roles. Southern Company and its charitable foundations are committing $225 million between 2021-2025 to advance racial equity and social justice in its communities. APC has specifically committed $54 million as a part of the Southern Company commitment. APC will align volunteering, giving and community investment strategies to four key pillars prioritized for impact: education equity, criminal justice equity, economic empowerment, and energy empowerment.

APC is committed to supplier inclusion and building relationships with small and diverse businesses, including minority-owned, woman-owned, HUBZone, veteran-owned, and service-disabled veteran-owned businesses. APC supports a mentor program to establish mutually beneficial business relationships with suppliers. This includes the Supplier Diversity Mentoring Program, which was created to establish a more diverse supplier base and to cultivate and expand business relationships between diverse suppliers and company representatives. If the studied technology were to be implemented, the project team would develop an outreach and recruitment plan aimed at attracting proposals from diverse firms, and would track and report progress towards developing those relationships.

With respect to environmental benefits and impacts, the project team would perform an assessment of project benefits to determine the potential for decreased environmental exposure in local communities. The team would also perform an assessment of any anticipated negative environmental impacts of the project, including mitigation plans. The project team would also engage with the community to identify potential positive and negative environmental impacts from the project.

CONCLUSION

The greatest value and success in community and stakeholder engagement is founded in facilitating meaningful interactions with a diversity of stakeholders across sectors and scales (e.g., elected officials; sovereign tribal nations; businesses; civic and community groups, media, regulatory agencies; environmental justice populations; and generally, the local community) throughout the planning and decision-making process.

Southern Company welcomes opportunities to engage, collaborate, and empower the local community. Southern Company is committed to promoting partnership and educational opportunities, as well as by leveraging untapped talent from historically underrepresented residents within the community in a way that aligns with the company's corporate social responsibility commitments and maintains a focus on developing and upholding environmental justice standards in workforce development. By prioritizing equitable engagement with the local community and key stakeholders, early and regularly, Southern Company is committed to sharing information and collaborating with the community on new technologies that can provide our customers and the communities we serve with clean, safe, reliable, and affordable energy.

1. APPENDIX

I. DOE Burden Indicators of Disadvantaged Communities

Variable	Description	Source
>30 min commute	Percent of total population with a drive time to employment greater than or equal to 30 minutes	(U.S. Census Bureau, 2019)
No Vehicle	Percent of total population with no vehicle(s) available	(U.S. Census Bureau, 2019)
Uninsured	Percent of population without health insurance	(U.S. Census Bureau, 2019)
Disability	Percent of the non-institutionalized population with any disability	(U.S. Census Bureau, 2019)
Unemployment	Percent of civilian labor force reported as unemployed	(U.S. Census Bureau, 2019)
Low Income	Percent of total population reported at or below area median income	(U.S. Census Bureau, 2019)
Incomplete Plumbing	Percent of occupied housing units without complete plumbing	(U.S. Census Bureau, 2019)
Single Parent	Proportion of family households with children under age 18 with only one parent	(U.S. Census Bureau, 2019)
Mobile Home	Percent of total population in mobile homes	(U.S. Census Bureau, 2019)
Non-grid-connected heating fuel	Percent of households that use a fuel other than grid-connected gas or electricity or solar energy as their main heat source	(U.S. Census Bureau, 2019)
Population 65 and older	Percent of total population over age 64	(U.S. Environmental Protection Agency, 2021)
Homes Built Before 1960	Percent of housing units built before 1960 (lead paint indicator)	(U.S. Environmental Protection Agency, 2021)
Diesel	EJ Index for Diesel particulate matter level in air	(U.S. Environmental Protection Agency, 2021)
Cancer	EJ Index for Air toxics cancer risk	(U.S. Environmental Protection Agency, 2021)
Traffic Proximity	EJ Index for Traffic proximity and volume	(U.S. Environmental Protection Agency, 2021)
Water Discharge	EJ Index for Indicator for major direct dischargers to water	(U.S. Environmental Protection Agency, 2021)
NPL Proximity	EJ Index for Proximity to National Priorities List (NPL) sites	(U.S. Environmental Protection Agency, 2021)
RMP Proximity	EJ Index for Proximity to Risk Management Plan (RMP) facilities	(U.S. Environmental Protection Agency, 2021)
TSDF Proximity	EJ Index for Proximity to Treatment Storage and Disposal (TSDF) facilities	(U.S. Environmental Protection Agency, 2021)
$PM_{2.5}$	EJ Index for $PM_{2.5}$ level in air	(U.S. Environmental Protection Agency, 2021)
Less HS Education	Percent of total population, age 25 and older, whose reported education is short of a high school diploma	(U.S. Environmental Protection Agency, 2021)
Linguistic Isolation	Percent of households living in linguistically isolated households. A household in which all members age 14 years and over speak a non-English language and also speak English less than "very well" (have difficulty with English) is linguistically isolated.	(U.S. Environmental Protection Agency, 2021)
Parks	Negative count of parks per census tract	(Esri, 2019)
Transportation Burden	Transportation Costs % Income for the Regional Typical Household	(Center for Neighborhood Technology, 2017)
Renters	Proportion of occupied housing units not occupied by property owners	(Center for Neighborhood Technology, 2017)
Housing Costs	Housing Costs % Income for the Regional Typical Household	(Center for Neighborhood Technology, 2017)
Job Access	Reciprocal of Job Access Score (0-10)	(Center for Neighborhood Technology, 2017)
Fossil energy employment	Percent of total civilian jobs in the fossil energy sector	(Interagency Working Group on Coal and Power Plant Communities and Economic Revitalization, 2021)

Coal employment	Percent of total civilian jobs in the coal sector	(Interagency Working Group on Coal and Power Plant Communities and Economic Revitalization, 2021)
Food Desert	Share of neighborhood without access to affordable or good-quality fresh food (Percentage who live within 1/2 mile (urban) or 10 miles (rural) of supermarket	("USDA ERS - Food Access Research Atlas," 2021)
Internet Access	Percent of Households with No Internet Access	(U.S. Department of Commerce National Telecommunications and Information Administration, 2021)
Homelessness	Representative of homeless population; calculated using total number of Sheltered and Unsheltered Population per sq. km	(U.S. Department of Housing and Urban Development, 2019)
Energy Burden	Annual average energy burden based on average annual housing energy costs divided by the average annual household income	(U.S. Department of Energy, 2018)
Outage Events	Number of power outage events that occurred for all census tracts in each county from 2017-2020	(U.S. Department of Energy Office of Cybersecurity Energy Security and Emergency Response, 2021)
Outage Duration	Average duration of power outage events (in minutes) that occurred for all census tracts in each county from 2017-2020	(U.S. Department of Energy Office of Cybersecurity Energy Security and Emergency Response, 2021)
Climate Hazards	Expected annual loss of life (fatalities and injuries) from 18 climate hazards	(U.S. Department of Homeland Security Federal Emergency Management Agency, 2021)

Appendix YY

Economic Revitalization and Job Creation Outcome Analysis

Notes:

(1) Original submittal to DOE on November 7, 2023
(2) Updated submittal to DOE on November 27, 2023

Executive Summary:

This Economic Revitalization and Job Creation Outcome Analysis has been completed to answer the key questions posed in the Funding Opportunity Announcement (FOA).

Specifically:

2) Apart from job creation, how will the project and/or the associated technology development and deployment support economic revitalization?
   Southern Company Services (SCS) has invested millions in local non-profits through both corporate giving (including giving through its corporate foundations: the Alabama Power Foundation, Georgia Power Foundation, and Southern Company Foundation), and through social justice initiatives focused on education, the environment, and the community. SCS and its foundations have pledged $225 million through 2025 to advance equity and social justice in communities where it operates. Its investment strategies target four key areas: economic empowerment, education equity, criminal justice equity, and energy empowerment.
3) How many jobs could potentially be created by the project and/or associated technology development and deployment?
   The Project estimates that 18 long-term technical jobs will be created by the proposed Project, as detailed in Table 1, in addition to the 257 employees (excluding contracted and temporary workers) currently employed at the existing natural gas combined cycle (NGCC) facility at Plant Barry. New employees in applicable roles will have the opportunity to join the existing union at Plant Barry under the International Brotherhood of Electrical Workers (IBEW); 180 current employees at natural gas combined cycle facility at Plant Barry – including operations, mechanics, and instrumentation/electrical personnel – are members of IBEW.
4) What will be the nature of the created jobs, including the extent to which they will include clean energy jobs?
   Based on initial estimates, 18 full-time technical jobs will be created for the operation of the complete Carbon Capture and Sequestration (CCS) facility, and approximately 1,750 construction jobs during the initial construction phase (lasting one year, full-time each). The full-time jobs include plant control operators, mechanics/welders, electrical & instrumentation journeymen, and other specialists. All created construction and operation jobs can be classified as clean energy jobs, given their direct influence on the operations of the CCS facility.
5) To what extent will the created jobs be at the prevailing wage?
   All created jobs will be at the prevailing wage. Technical-economic analysis for the project was conducted with the assumption that labor wages paid would be at union rates. These wages were then checked and compared with prevailing wages to confirm that they meet the current prevailing wages in the study area (Mobile County, Baldwin County, and Washington County, Alabama) for the applicable levels.
6) To what extent will the created jobs be located in power plant and coal communities that are economically distressed and/or have been harmed by the adverse environmental impacts of the energy industry?
   The Project will ultimately aid in bringing energy transition jobs into the community, reducing the local labor force's dependence on fossil fuel jobs as the energy industry transitions to renewable energy. The Project will also serve to reduce emissions and pollution typically associated with fossil fuel-based energy generation, offering a solution

to address the harmful environmental impacts (including elevated asthma, wastewater discharge, air toxic cancer risk, particulate matter, and climate hazards loss of life rates) currently experienced by the community. Job creation at the prevailing wage and workforce development opportunities offered by the Project will address the economic needs of the community, including disadvantages communities that will benefit from targeted recruiting efforts.

7) What recruitment strategies will be used for: a) workers from the local community, and b) individuals who belong to groups that are historically underserved or underrepresented?

   The proposed Project anticipates utilizing the following recruitment strategies in both Mobile County and the larger Alabama area, based on experience and existing community relationships at the Plant Barry NGCC facility: recruiting young people entering the workforce through high school partnerships; recruiting young people entering the workforce through community college partnerships; recruiting young people entering the workforce through university partnerships; recruiting women candidates through professional associations; and recruiting minority candidates through associations with a Diversity Equity & Inclusion focus. Southern Company has pre-existing relationships with all of these mentioned organizations.

8) Will the skills possessed by the existing labor force be adequate for the created jobs, or will training be required for those workers?

   Local unemployment data shows that there is a sufficient qualified applicant pool in Mobile County, AL alone to supply about 645 construction workers (about 35% of the expected quantity required for the construction phase) and all 18 long-term technical operations employees. SCS has a detailed recruitment strategy targeting professionals across age and ethnic demographics in the larger Alabama area, which would allow the Project to obtain additional qualified employees in neighboring regions.

   SCS is committed to supporting employees during its Just Transition. The company's goal is to provide opportunities to support any employee who may be affected by the fleet's transition to low-carbon solutions; this may involve reassignment to a similar role at another company facility or receiving training to help them transfer to another part of the company.

Prepared for

United States Department of Energy

Office of Fossil Energy and Carbon Management

Prepared by

Ramboll Americas Engineering Solutions, Inc.

Project Number

1940105223

Date

November 6, 2023

PLANT BARRY ECONOMIC REVITALIZATION AND JOB CREATION OUTCOME ANALYSIS

1. Introduction

GE Gas Power (GEGP), in connection with Linde, Kiewit Engineering, and Southern Company Services (SCS), are preparing a deliverable as a part of GEGP's ongoing Front End Engineering Design (FEED) Study "Retrofittable Advanced Combined Cycle Integration for Flexible Decarbonized Generation" awarded under Department of Energy's (DOE's) Funding Opportunity Announcement No.: DE-FOA-0002515.

GEGP, with partners, is planning for the installation of a carbon capture and sequestration (CCS) facility that will be integrated into an existing natural gas combined cycle (NGCC) unit at a power plant located in the Gulf Coast region, specifically Plant Barry, Block 6, in Bucks, Alabama (the Project). The NGCC unit will be modified with certain equipment upgrades to improve efficiency and to accommodate the integration of a CCS facility. The integrated NGCC/CCS facility will be designed under the Front End Engineering Design (FEED) study. The project will take place at the James M. Barry Electric Generating Plant. A new carbon dioxide (CO_2) pipeline will also be built to transfer captured carbon to a sequestration facility located offsite.

GEGP was awarded the FEED study in February of 2022 and the FEED study is scheduled to be completed in December 2023, including this Economic Revitalization and Job Creation Outcome Analysis, which is organized to answer the key questions posed in the FOA.

Natural gas power plants are essential in the energy transition in support of adding more renewable energy to the grid. Natural gas is still a producer of carbon emissions. GEGP is aiming to unlock ways to decarbonize gas-fired power plants. CCS is a tactic to capture CO_2 and trap it safely underground or reuse the gas in the making of other products. The project will explore ways to lower the cost of CCS while reducing CO_2 emissions from natural gas power

plants by up to 95%. The US Department of Energy (DOE) funding aims to further the goal of net-zero carbon emissions by 2050 and a 100% clean electricity sector by 2035. CCS is critical to curtailing greenhouse gas emissions from power plants to achieve net-zero goals.

The Barry site consists of the following major components and has ample available land nearby for adding Carbon Capture and Sequestration (CCS): two GE 7FA gas turbines (GTs); two Vogt horizontal gas flow triple pressure reheat Heat Recovery Steam Generators with duct burners; and one GE D650 steam turbine. Makeup water is readily available at the site from the adjacent Mobile River. Proven advanced amine solvent (BASF OASE Blue), with a capture rate of 95%, will be provided by Linde CCS technology. To reduce the CCS cost, GE will provide an Exhaust Gas Recirculation (EGR) system which will elevate the Carbon Dioxide (CO_2) concentration at the CCS allowing the system to remove a higher percentage of CO_2 (6.7%vol with EGR vs 4.0%vol without EGR).

2. Apart from job creation, how will the project and/or the associated technology development and deployment support economic revitalization?

SCS has invested millions in local non-profits through both corporate giving (including giving through its corporate foundations: the Alabama Power Foundation, Georgia Power Foundation, and Southern Company Foundation), and through social justice initiatives focused on education, the environment, and the community. SCS and its foundations have pledged $225 million through 2025 to advance equity and social justice in communities where it operates. Its investment

strategies target four key areas: economic empowerment, education equity, criminal justice equity, and energy empowerment.

Existing relationships developed through SCS's past corporate social responsibility activities will serve as the basis for a community stakeholder engagement plan that will be employed to support economic revitalization efforts as part of the next Project phases. Relationship partners will support the Project proponents in developing an outreach list of the most relevant stakeholders to the proposed Project – including elected officials, municipalities, labor organizations, tribal entities, educational institutions, and other community organizations. This will allow the Project to critically evaluate community priorities, engage with local leaders and representatives, understand potential barriers to engagement, and ultimately increase energy democracy in the community. The Project has a designated individual (SCS Community Benefits and Justice40 Project Manager) responsible for ensuring that community engagement plans are implemented appropriately.

The identified stakeholders will help prioritize the most pressing economic priorities of the community that the Project is best equipped to influence. The Project will strategically choose the problem areas where it could be most impactful, based on the company's expertise and available resources. Strategic economic revitalization opportunities include creating job training / recruitment programs through partnerships with community colleges, vocational and high schools, and local workforce development organizations, as well as investment in local infrastructure near the Project site (e.g., roads).

3. How many jobs could potentially be created by the project and/or associated technology development and deployment?

The Project estimates that 18 long-term technical jobs will be created by the proposed Project, as detailed in Table 1**,** in addition to the 257 employees (excluding contracted and temporary workers) currently employed at the existing natural gas combined cycle facility at Plant Barry. According to the Bureau of Labor Statistics, the total civilian labor force of Mobile, AL was approximately 193,700 in August of 2023[1].

New employees in applicable roles will have the opportunity to join the existing union at Plant Barry under the International Brotherhood of Electrical Workers (IBEW); 180 current employees at natural gas combined cycle facility at Plant Barry – including operations, mechanics, and instrumentation/electrical personnel – are members of IBEW. There are a total of 7,823 people between the ages of 18 and 65 within a 10-mile radius surrounding Plant Barry.

In addition to long-term jobs, $147 million is budgeted for labor costs in the construction phase of the proposed Project. Assuming a construction union wage of $40.41 (average union wage in the construction sector in 2022)[2] and 2,080 working hours per year (full-time), this results in an estimated 1,750 construction jobs over the course of the construction phase, each lasting one year full-time.

[1] Bureau of Labor Statistics, Mobile, AL Economy at a Glance

[2] Barry T. Hirsch, David A. Macpherson, and William E. Even, Unionstats.com, 2023

Operations Job Title	Qty. of Jobs
Plant Control Operators (PCO) – inside operations duties	5
Assistant Plant Control Operators (APCO) Outside operations duties	5
Mechanics/Welders	2
Electrical & Instrumentation Journeymen	2
Instrument & Control Specialist	1
Chemical Technician	1
System Owner	1
Unit Owner	1
Total:	**18**

Table 1: Long-term jobs created

4. What will be the nature of the created jobs, including the extent to which they will include clean energy jobs?

Based on initial estimates, 18 full-time technical jobs will be created for the operation of the complete CCS facility, and approximately 1,750 construction jobs during the initial construction phase (lasting one year, full-time each). See **Table 1** above for anticipated jobs during the operations phase. All created construction and operation jobs can be classified as clean energy jobs, given their direct influence on the operations of the CCS facility.

Plant Barry promotes a proactive and positive safety culture by building relationships and encouraging continuous improvement. Staff conduct daily Job Safety Briefings and weekly safety meetings within each department. Additionally, fleetwide safety meetings are held monthly, covering recent safety metrics, critical risk topics, and upcoming events. Job observations of routine and critical risk tasks are completed by plant personnel and reviewed weekly with management. The Safety Team meets monthly and conducts inspections of different areas of the fleet. Our staff also conducts monthly, quarterly, and annual reviews of our Safety and Health Programs, ensuring that required training for programs such as Lock Out Tag Out, Confined Space, Respiratory Protection, Fall Protection, Arc Flash, and Hazard Communication has been completed. We encourage hazard recognition and incident reporting

using positive reinforcement. Learning Events are completed as appropriate to prevent the recurrence of any unsafe events. All of these efforts demonstrate SCS's commitment to the safety of all SCS employees.

5. To what extent will the created jobs be at the prevailing wage?

All created jobs will be at the prevailing wage. Technical-economic analysis for the project was conducted with the assumption that labor wages paid would be at union rates. These wages were then checked and compared with prevailing wages to confirm that they meet the current prevailing wages in the study area (Mobile County, Baldwin County, and Washington County, Alabama) for the applicable levels.

6. To what extent will the created jobs be located in power plant and coal communities that are economically distressed and/or have been harmed by the adverse environmental impacts of the energy industry?

The proposed Project will be retrofitted to an existing NGCC unit that is part of the Barry Electric Generation Plant in Bucks, Alabama (in Mobile County, AL.) According to the U.S. Interagency Working Group on Coal & Power Plan Communities & Economic Revitalization[3], the proposed plant is located in a Priority Energy Community. Southwest Alabama is ranked #21 of 521 total Bureau of Labor Statistics areas on the list of coal and powerplant communities prioritized for

[3] U.S. Interagency Working Group on Coal & Power Plan Communities & Economic Revitalization, Priority Energy Communities

near-term investment from existing federal agency programs based on the area's high proportion of coal jobs. According to the White House Council on Environmental Quality's Climate and Economic Justice Screening tool (CEJST), the census tract in which Plant Barry is located (01097005800) ranks in the 88th percentile nationally for "fossil fuel employment", as well as in the 65th percentile for "energy burden."[4]

The DOE's Energy Justice Mapping Tool - Disadvantaged Communities Reporter[5] designates Plant Barry's census tract (01097005800) as having "disadvantaged" status; the tract has a "disadvantaged communities national ranking" in the 86th percentile and a "disadvantaged communities score" of 20. The disadvantaged status is granted to the tract based on passing a defined threshold for multiple indicators, including being in the 78th percentile nationally for "low income."[6] The tract's "climate hazards loss of life estimates" – which measures the expected annual loss of life (fatalities and injuries) from 18 different climate hazards – ranks in the 88th percentile nationally. It is reasonable to surmise that the climate hazards loss of life burden is influenced by the area's position as coal community.

According to CEJST, the Plant Barry's census tract has ten Climate and Economic Justice Burdens that score above the 80th percentile. The ten burdens identified for the census tract are expected agriculture loss rate, expected building loss rate, project wildfire risk, asthma, diabetes, heart disease, formerly used defense site (FUDS), transportation barriers, wastewater discharge, and low income. It is reasonable to surmise that at minimum the elevated asthma and wastewater

[4] White House Council on Environmental Quality, Climate and Economic Justice Screening Tool

[5] U.S. Department of Energy, Office of Energy Justice and Equity, Energy Justice Mapping Tool - Disadvantaged Communities Reporter

[6] White House Council on Environmental Quality, Climate and Economic Justice Screening Tool (CEJST)

discharge indicators are influenced by the area's position as a coal community. The percentile scores for each of the identified burdens can be found in **Table 2** below.

Amongst the US EPA Environmental Justice Screening and Mapping Tool's (EJScreen)[7] environmental justice indicators, particulate matter, air toxics cancer risk, and toxic releases to air rates are above the national average for the study area. In this case, the study area being considered is delineated by a 10-mile radius buffer surrounding the Plant Barry site and included multiple census tracts (1097005800; 1129044200; 1097006000; 1097005900; 1097006104; 1097005700; 1097005600; 1097003800; 1003010300; 1003010100). It is reasonable to surmise that the elevated particulate matter, air toxics cancer risk, and toxic released to air rate indicators are influenced by the area's position as a coal community. The study area's values for EJ indicators, along with the state and national averages, can be found in Error! Reference source not found. below.

The Project will ultimately aid in bringing energy transition jobs into the community, reducing the local labor force's dependence on fossil fuel jobs as the energy industry transitions to renewable energy. The Project will also serve to reduce emissions and pollution typically associated with fossil fuel-based energy generation, offering a solution to address the harmful environmental impacts (including elevated asthma, wastewater discharge, air toxic cancer risk, particulate matter, and climate hazards loss of life rates) currently experienced by the community. Job creation at the prevailing wage and workforce development opportunities offered by the Project will address the economic needs of the community, including disadvantages communities that will benefit from targeted recruiting efforts.

[7] US EPA Environmental Justice Screening and Mapping Tool (EJ Screen)

Climate and Economic Justice Screening Tool's Climate and Economic Justice Markers	Percentile
Expected agriculture loss rate Economic loss to agricultural value resulting from natural hazards each year	84%
Expected building loss rate Economic loss to building value resulting from natural hazards each year	96%
Projected wildfire risk Projected risk to properties from wildfire from fire fuels, weather, humans, and fire movement in 30 years	89%
Asthma Share of people who have been told they have asthma	85%
Diabetes Share of people ages 18 years and older who have diabetes other than diabetes during pregnancy	95%
Heart Disease Share of people ages 18 years and older who have been told they have heart disease	91%
Legacy Pollution Concerns as a Formerly Used Defense Sites Presence of one or more Formerly Used Defense Site within the tract	Yes
Transportation barriers Average of relative cost and time spent on transportation	98%
Wastewater discharge Modeled toxic concentrations at parts of streams within 500 meters	86%
Low income People in households where income is less than or equal to twice the federal poverty level, not including students enrolled in higher education	82%

Table 2: Climate and Economic Justice Screen Tool Burdens

Environmental Justice Indicator	Study Area Value	State Average	National Average
Pollution and Sources			
Particulate Matter 2.5 (µg/m3)	9.15	9.17	8.08
Air Toxics Cancer Risk* (lifetime risk / million)	30	34	25
Air Toxics Respiratory HI* (Ratio of exposure concentration to health-based reference concentration)	0.44	0.44	0.31
Toxic Releases to Air (toxicity-weighted concentrations in air of TRI listed chemicals)	6600	21000	4600
Socioeconomic Indicators			
Demographic Index	33%	38%	35%
Supplemental Demographic Index	16%	17%	15%
People of Color	34%	35%	40%
Low Income	33%	36%	30%
Unemployment Rate	6%	6%	5%
Limited English Speaking	0%	1%	5%
Less Than High School Education	18%	13%	12%
Under Age 5	6%	6%	6%
Over Age 64	18%	17%	16%
Low Life Expectancy	21%	23%	20%

Table 3: EPA EJ Screening and Mapping Tool indicators

7. What recruitment strategies will be used for: a) workers from the local community, and b) individuals who belong to groups that are historically underserved or underrepresented?

The proposed Project anticipates utilizing the following recruitment strategies in both Mobile County and the larger Alabama area, based on experience and existing community relationships at the Plant Barry NGCC facility:

- **Recruiting young people entering the workforce through high school partnerships**: Citronelle High School (Citronelle, AL) and Alma Bryant High School (Irvington, AL)
- **Recruiting young people entering the workforce through community college partnerships**: Bishop State Community College (Mobile, AL), Mississippi Gulf Coast Community College (Perkinston, MS, Coastal Alabama Community College (Bay Minette, AL), Remington College (Mobile, AL)
- **Recruiting young people entering the workforce through university partnerships**: primarily through southeastern engineering schools, including but not limited to University of South Alabama (Mobile, AL), Auburn University (Auburn, AL), University of Alabama (Tuscaloosa, AL), University of Alabama-Birmingham (Birmingham, AL), Tuskegee University (Tuskegee, AL), and Alabama A&M University (Huntsville, AL)
- **Recruiting women candidates through professional associations**: National Association of Women in Construction, Society of Women Engineers (SWE)
- **Recruiting minority candidates through associations with a Diversity Equity & Inclusion focus:** National Society of Black Engineers (NSBE), Society of Hispanic Engineers (SHPE)

Southern Company has pre-existing relationships with all of these mentioned organizations.

In 2020, SCS put forward their Moving to Equity strategy to build on years of work around diversity and inclusion. The strategy details initiatives to achieve goals in five commitment areas: talent, work environment, supplier inclusion, civic engagement, and community investment and social justice. For each of the five commitment areas, SCS developed key performance indicators to track progress and highlight key results.

SCS commits to increasing and improving outreach, recruitment, hiring and retention of diverse talent at all levels of the workforce; helping ensure equity in leadership development programs; and seeking diverse candidate pools for all roles. In 2022, $2.1 billion was spent with diverse suppliers and $76.4 million was invested in communities where the company operates to advance equity and social justice. In the same year, 30% of total SCS employees identified as People of Color, and 26% identified as women. Of the current Plant Barry employees, 24% identify as People of Color, and 17% identify as women.

8. Will the skills possessed by the existing labor force be adequate for the created jobs, or will training be required for those workers?

Based on data from the U.S. Department of Commerce (2022) and Bureau of Economic Analysis - Regional Economic Accounts, Mobile County, AL has significant labor force in the areas of construction (16,968 in 2021,) manufacturing (18,850 in 2021,) and professional/technical services (12,503 in 2021).[8] The national unemployment rate in September 2023 for the

[8] U.S. Department of Commerce (2022), and Bureau of Economic Analysis - Regional Economic Accounts, as reported by Headwaters Economics' Economic Profile System

construction sector was 3.8% and 3.0% for the utilities sector;[9] this is similar to the sector-agnostic unemployment rate in Mobile, AL, which was at 3% in September 2023.[10] Together this suggests that there is a sufficient qualified applicant pool in Mobile County, AL alone to supply about 645 construction workers (about 35% of the expected quantity required for the construction phase) and all 18 long-term technical operations employees. SCS has a detailed recruitment strategy targeting professionals across age and ethnic demographics in the larger Alabama area, as described in question 7, which would allow the Project to obtain additional qualified employees in neighboring regions.

SCS is committed to supporting employees during its Just Transition. The company's goal is to provide opportunities to support any employee who may be affected by the fleet's transition to low-carbon solutions; this may involve reassignment to a similar role at another company facility or receiving training to help them transfer to another part of the company. This process may bring existing SCS employees from other parts of the business to the proposed Plant Barry CCS facility. SCS supports continued education for employees through on-the-job training, classroom training, and tuition reimbursement. The company supplements workforce development with partnerships through organizations including the American Clean Power Association and the Center for Energy Workforce Development, which can further contribute to skills development of SCS employees.

A more thorough description of Southern Company's Just Transition can be found at:

https://www.southerncompany.com/content/dam/southerncompany/sustainability/pdfs/Just-Transition-Report.pdf

[9] Bureau of Labor Statistics, Labor Force Statistics from the Current Population Survey, October 06, 2023
[10] Bureau of Labor Statistics, Mobile, AL Economy at a Glance

"Southern Company is focused on supporting a Just Transition for our workforce, communities and customers. We believe that achieving this will require coordinated private and public efforts, and Southern Company is committed to playing a leadership role as we transition to a new energy economy."